オールテレーンクレーン
ATF-120N-5.1
フルオートラフィングジブ

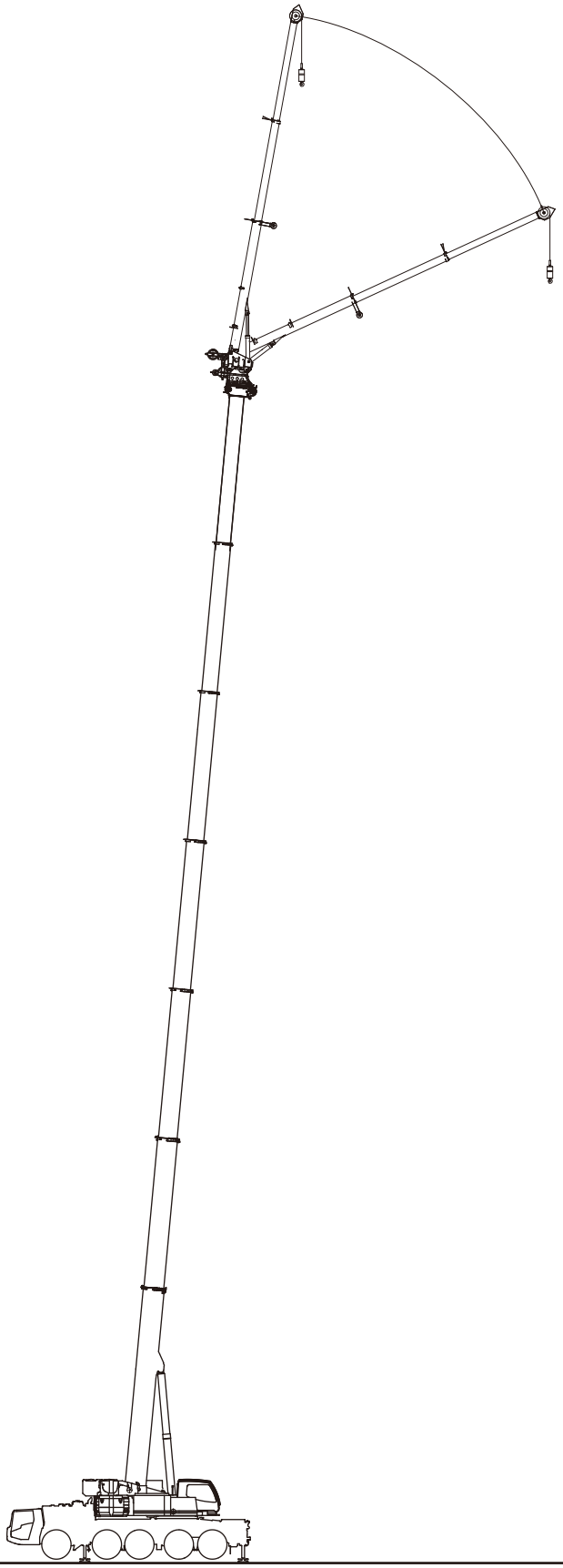

ブーム+フルオートラフィングジブ(FLJ)作業半径ー揚程図

11.4mブーム+フルオートラフィングジブ

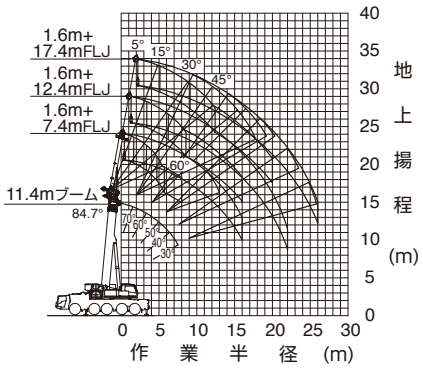

（注意） 1. 上図はブームおよびジブのたわみを含んでいません。
2. カウンタウエイト34.1ｔ、アウトリガ張出幅7.5m時の性能を図示しています。

15.1mブーム+フルオートラフィングジブ

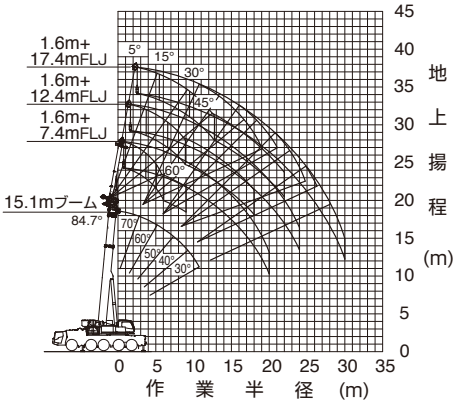

（注意） 1. 上図はブームおよびジブのたわみを含んでいません。
2. カウンタウエイト34.1ｔ、アウトリガ張出幅7.5m時の性能を図示しています。

18.8mブーム+フルオートラフィングジブ

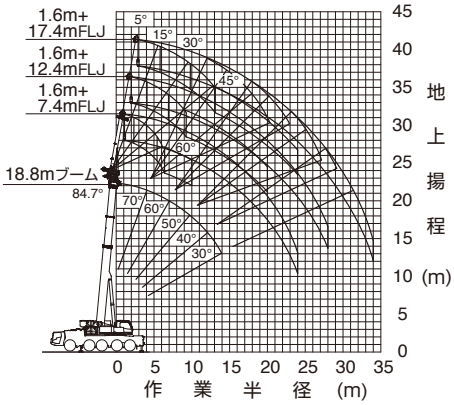

（注意） 1. 上図はブームおよびジブのたわみを含んでいません。
2. カウンタウエイト34.1ｔ、アウトリガ張出幅7.5m時の性能を図示しています。

22.6mブーム+フルオートラフィングジブ

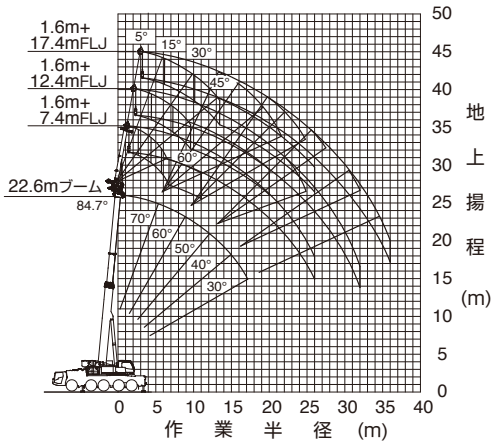

（注意） 1. 上図はブームおよびジブのたわみを含んでいません。
2. カウンタウエイト34.1ｔ、アウトリガ張出幅7.5m時の性能を図示しています。

26.3mブーム+フルオートラフィングジブ

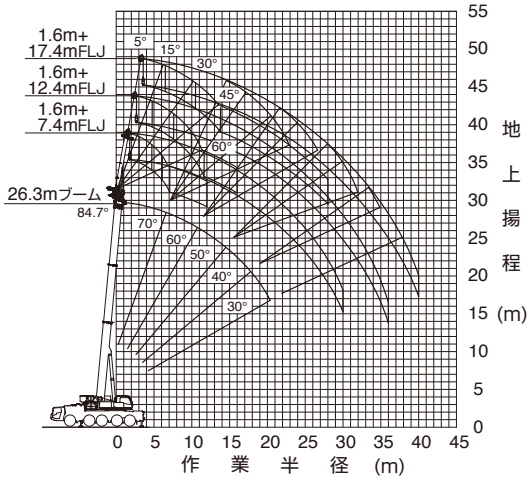

（注意） 1. 上図はブームおよびジブのたわみを含んでいません。
2. カウンタウエイト34.1ｔ、アウトリガ張出幅7.5m時の性能を図示しています。

30.0mブーム+フルオートラフィングジブ

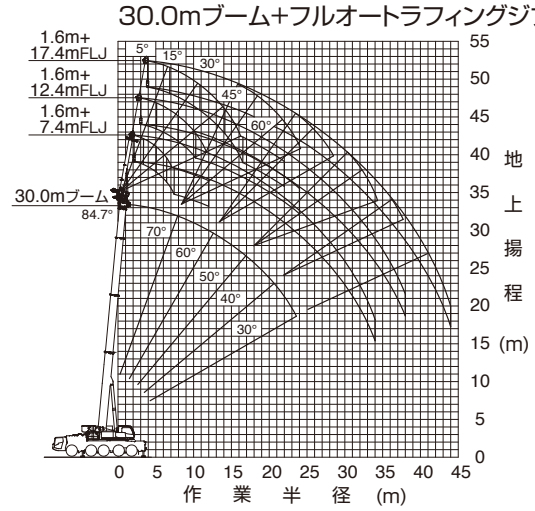

（注意） 1. 上図はブームおよびジブのたわみを含んでいません。
2. カウンタウエイト34.1ｔ、アウトリガ張出幅7.5m時の性能を図示しています。

フルオートラフィングジブ

ブーム＋フルオートラフィングジブ(FLJ)作業半径－揚程図

33.7mブーム+フルオートラフィングジブ

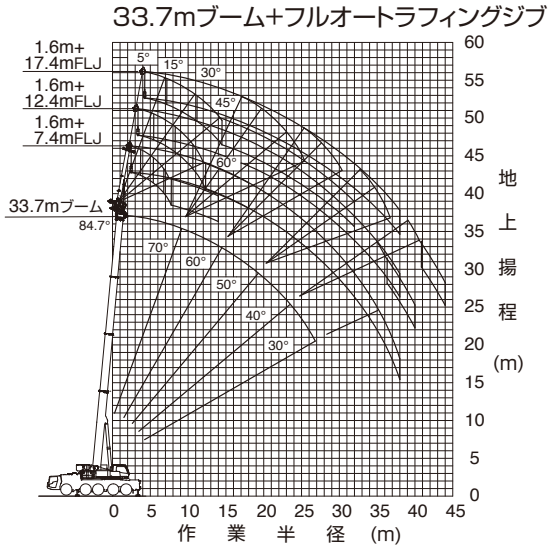

（注意） 1. 上図はブームおよびジブのたわみを含んでいません。
2. カウンタウエイト34.1ｔ、アウトリガ張出幅7.5m時の性能を図示しています。

37.4mブーム+フルオートラフィングジブ

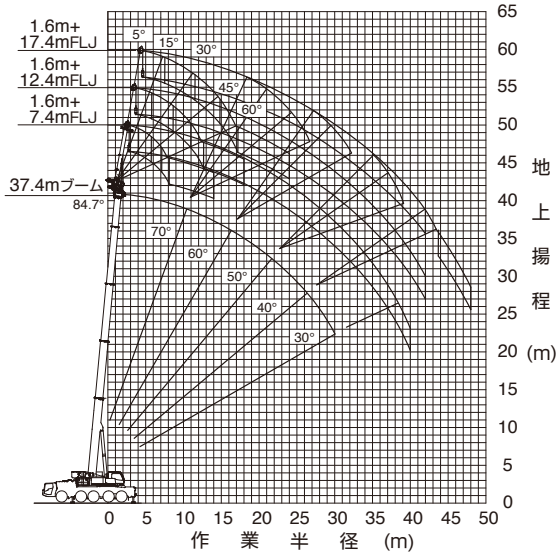

（注意） 1. 上図はブームおよびジブのたわみを含んでいません。
2. カウンタウエイト34.1ｔ、アウトリガ張出幅7.5m時の性能を図示しています。

41.2mブーム+フルオートラフィングジブ

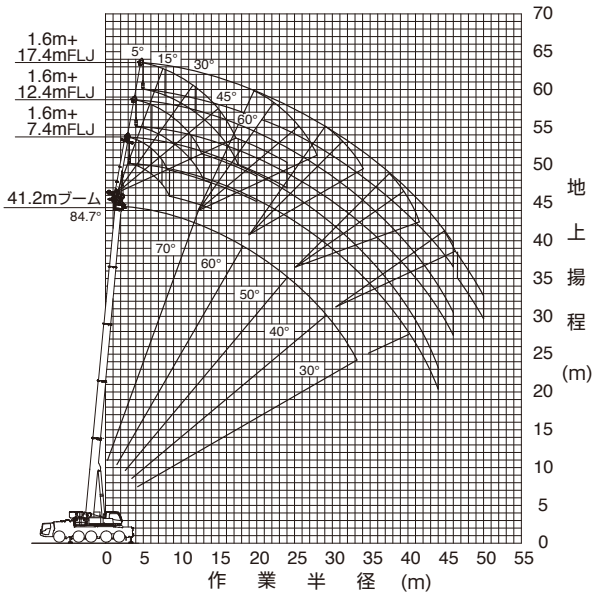

（注意） 1. 上図はブームおよびジブのたわみを含んでいません。
2. カウンタウエイト34.1ｔ、アウトリガ張出幅7.5m時の性能を図示しています。

44.9mブーム+フルオートラフィングジブ

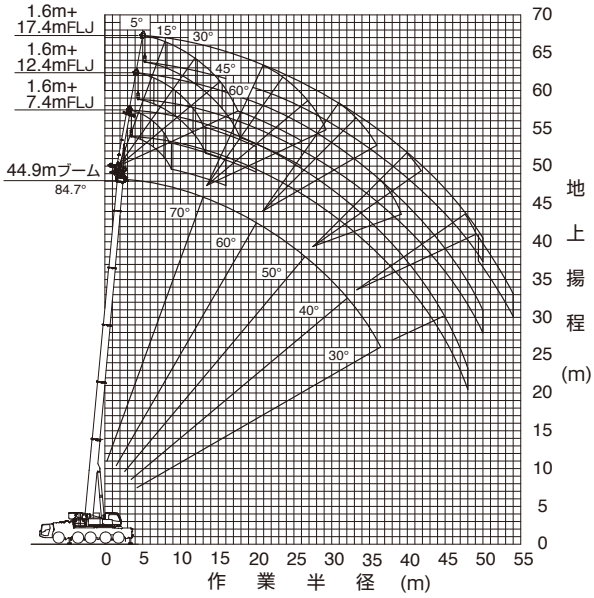

（注意） 1. 上図はブームおよびジブのたわみを含んでいません。
2. カウンタウエイト34.1ｔ、アウトリガ張出幅7.5m時の性能を図示しています。

48.6mブーム+フルオートラフィングジブ

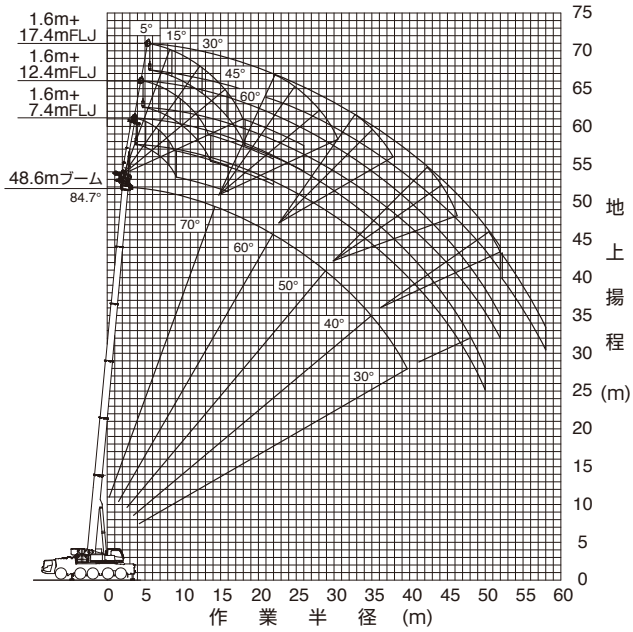

（注意） 1. 上図はブームおよびジブのたわみを含んでいません。
2. カウンタウエイト34.1ｔ、アウトリガ張出幅7.5m時の性能を図示しています。

52.3mブーム+フルオートラフィングジブ

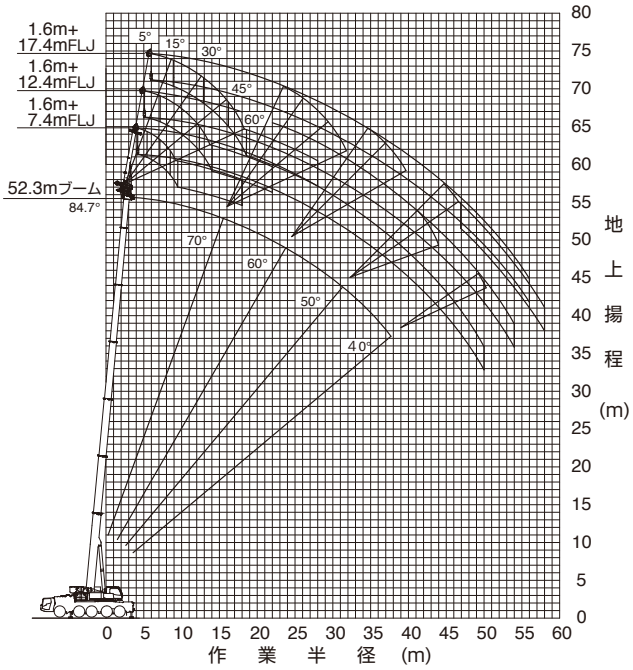

（注意） 1. 上図はブームおよびジブのたわみを含んでいません。
2. カウンタウエイト34.1ｔ、アウトリガ張出幅7.5m時の性能を図示しています。

56.0mブーム+フルオートラフィングジブ

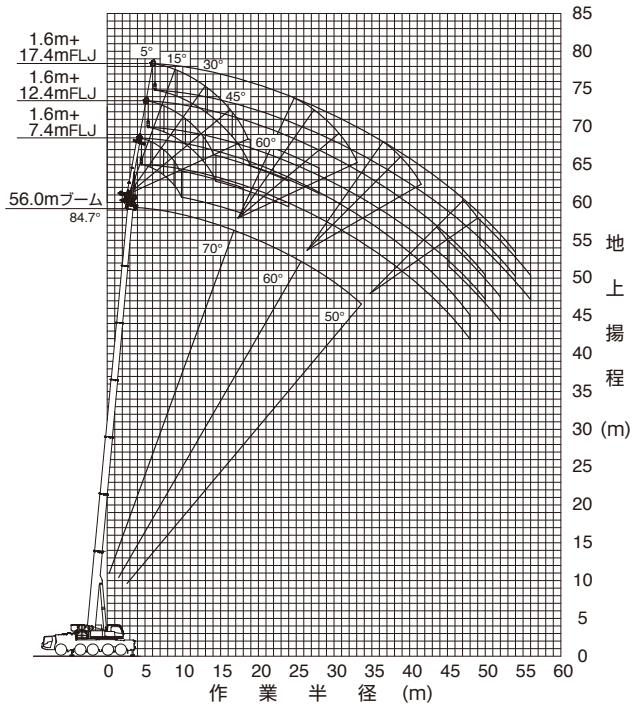

（注意） 1. 上図はブームおよびジブのたわみを含んでいません。
2. カウンタウエイト34.1ｔ、アウトリガ張出幅7.5m時の性能を図示しています。

60.0mブーム+フルオートラフィングジブ

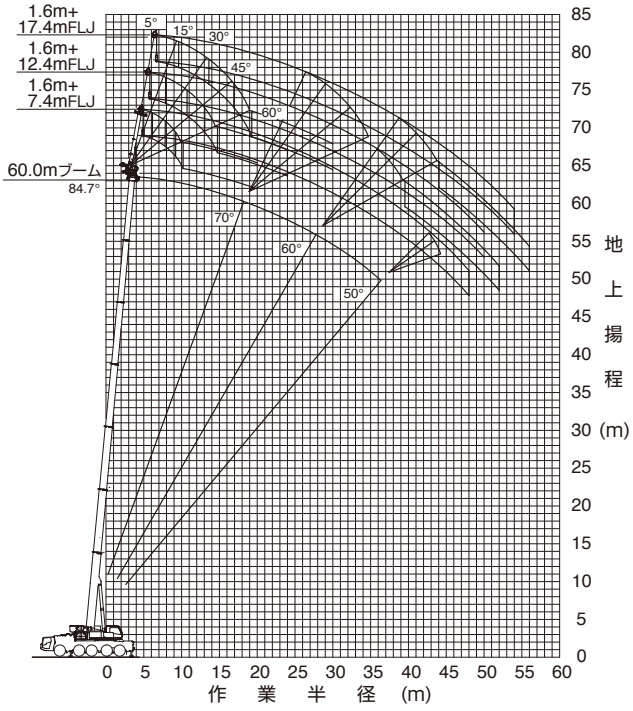

（注意） 1. 上図はブームおよびジブのたわみを含んでいません。
2. カウンタウエイト34.1ｔ、アウトリガ張出幅7.5m時の性能を図示しています。

ブーム＋フルオートラフィングジブ(FLJ)定格総荷重表

■ 定格総荷重表注意事項

◆性能設定のあるカウンタウエイトとアウトリガ張出幅の組合せを、下表に○印で示します。

アウトリガ張出幅＼カウンタウエイト	34.1 t	22.7 t	18.7 t	15.3 t	11.9 t	9.6 t	6.2 t
7.5 m	○	○	○	○	○	○	○
6.2 m	○	○	○	○	○	○	○
5.0 m		○	○	○	○	○	

※同じブーム長さでも、ブームの伸長状態によって定格総荷重が異なります。

◆定格総荷重は、つり具質量とフック質量（8.7tフック:300kg）を含んだ値を示します。
◆定格総荷重は、ブームとジブのたわみを含んだ実際の作業半径に基づいています。
◆定格総荷重表中の標準巻掛本数より少ない本数で使用する場合、最大荷重の上限は下表のとおりです。

巻掛本数	1本
最大荷重	8.7t

◆定格総荷重はアウトリガを水平堅土上に設置したときの値で、太線より上側はクレーンの強度に基づき、下側はクレーンの安定に基づいています。
◆定格総荷重表は、風による影響を含んでいません。瞬間最大風速が10m／s以上の風速では、クレーン作業を中止してください。

定格総荷重表中のシンボル、記号の説明

MB	ブームの定格総荷重を示します。	m	ブーム長さを示します。
FLJ	フルオートラフィングジブ (FLJ) の定格総荷重を示します。		ジブのオフセット角度を示し、ブームの中心線とジブの中心線のなす角度を示します。
	フルオートラフィングジブ (FLJ) のジブ長さを示します。	m	作業半径を示します。
	カウンタウエイト（C/W）組合せを示します。	%	ブーム伸縮状態 (伸縮割合 %) を示します。 IDはブーム伸縮状態に対応する番号を示します。
	アウトリガ張出幅を示します。		無負荷状態で作動可能なブーム起伏角度範囲を示します。
360 °	吊上げ可能な旋回範囲を示します。		標準巻掛本数を示します。
t JPN	定格総荷重の単位を示します。		標準フックを示します。

■ 定格総荷重表の見方

1. アウトリガ張出幅とカウンタウエイトの質量とジブ長さに応じた性能を選択します。
2. ブーム長さとIDとオフセット角度の欄を見ます。
3. 作業半径を見ます。
4. オフセット角度と作業半径が交差するところが定格総荷重です。

FLJ	1.6m + 7.4m	34.1 t	8.0m x 7.5m	360 °	JPN

m	11.4	11.4	11.4	11.4	11.4	15.1	15.1	15.1	15.1	15.1	15.1	15.1	15.1	15.1	15.1	15.1	15.1	15.1	15.1	15.1	18.8	18.8	18.8	18.8	18.8	m
°	5	15	30	45	60	5	15	30	45	60	5	15	30	45	60	5	15	30	45	60	5	15	30	45	60	°
3.0	7.3					7.3					7.3					7.3					7.3					3.0
3.5	7.3					7.3					7.3					7.3					7.3					3.5
4.0	7.3	7.3				7.3	7.3				7.3	7.3				7.3	7.3				7.3					4.0
4.5	7.3	7.3				7.3	7.3				7.3	7.3				7.3	7.3				7.3					4.5
5.0	7.3	7.3	7.3			7.3	7.3				7.3	7.3				7.3	7.3				7.3	7.3				5.0
6.0	7.3	7.3	7.3			7.3	7.3	7.3			7.3	7.3	7.3			7.3	7.3	7.3			7.3	7.3	7.3			6.0
7.0	7.3	7.3	7.3	6.5	5.0	7.3	7.3	7.3	6.7		7.3	7.3	7.3	6.7		7.3	7.3	7.3	6.7		7.3	7.3	7.3			7.0
8.0	7.3	7.3	7.3	6.3	4.9	7.3	7.3	7.3	6.5	5.0	7.3	7.3	7.3	6.5	5.0	7.3	7.3	7.3	6.5	5.0	7.3	7.3	7.3	6.6	5.0	8.0
9.0	7.3	7.3	7.2	6.8		7.3	7.3	7.3	6.3	4.9	7.3	7.3	7.3	6.3	4.9	7.3	7.3	7.3	6.3	4.9	7.3	7.3	7.3	6.4	4.9	9.0
10.0	7.3	7.3	6.9	5.9		7.3	7.3	7.3	6.1		7.3	7.3	7.3	6.1		7.3	7.3	7.3	6.1		7.3	7.3	7.3	6.3	4.9	10.0
11.0	7.3	7.3	6.6	5.7		7.3	7.3	7.0	5.9		7.3	7.3	7.0	5.9		7.3	7.3	7.0	5.9		7.3	7.3	7.3	6.1		11.0
12.0	7.3	7.0	6.3			7.3	7.3	6.8	5.8		7.3	7.3	6.8	5.8		7.3	7.3	6.8	5.8		7.3	7.3	7.2	6.0		12.0
14.0	6.4	6.2	5.9			7.3	7.1	6.3			7.1	7.1	6.3			7.3	7.1	6.3			7.3	7.3	6.7	5.7		14.0
16.0	5.7	5.7				6.8	6.4	5.9			6.4	6.4	5.9			6.8	6.4	5.9			7.3	7.1	6.3			16.0
18.0						6.0	5.9				5.9	5.9				6.0	5.9				7.0	6.6	6.0			18.0
20.0						5.5					5.5					5.5					6.3	6.1				20.0
22.0																					5.8	5.7				22.0
24.0																					5.3					24.0
26.0																										26.0
28.0																										28.0
30.0																										30.0
32.0																										32.0
34.0																										34.0
36.0																										36.0
38.0																										38.0
40.0																										40.0
42.0																										42.0
44.0																										44.0
46.0																										46.0
48.0																										48.0
50.0																										50.0
52.0																										52.0
54.0																										54.0
56.0																										56.0
58.0																										58.0
60.0																										60.0
64.0																										64.0
1	0	0	0	0	0	0	0	0	0	0	0	0	0	0	0	0	0	0	0	0	0	0	0	0	0	1
2	0	0	0	0	0	0	0	0	0	0	0	0	0	0	0	46	46	46	46	46	0	0	0	0	0	2
3	0	0	0	0	0	0	0	0	0	0	46	46	46	46	46	0	0	0	0	0	0	0	0	0	0	3
4	0	0	0	0	0	46	46	46	46	46	0	0	0	0	0	0	0	0	0	0	0	0	0	0	0	4
5	0	0	0	0	0	0	0	0	0	0	0	0	0	0	0	0	0	0	0	0	46	46	46	46	46	5
6	0	0	0	0	0	0	0	0	0	0	0	0	0	0	0	0	0	0	0	0	46	46	46	46	46	6
ID	1	1	1	1	1	76	76	76	76	76	105	105	105	105	105	131	131	131	131	131	30	30	30	30	30	ID
[DEG]	0~84.7	0~84.7	0~84.7	0~84.7	0~84.7	24~84.7	37~84.7	48~84.7	64~84.7	75~84.7	24~84.7	37~84.7	48~84.7	64~84.7	75~84.7	24~84.7	37~84.7	48~84.7	64~84.7	75~84.7	22~84.7	34~84.7	50~84.7	63~84.7	75~84.7	[DEG]
	1	1	1	1	1	1	1	1	1	1	1	1	1	1	1	1	1	1	1	1	1	1	1	1	1	
	8.7t	8.7t	8.7t	8.7t	8.7t	8.7t	8.7t	8.7t	8.7t	8.7t	8.7t	8.7t	8.7t	8.7t	8.7t	8.7t	8.7t	8.7t	8.7t	8.7t	8.7t	8.7t	8.7t	8.7t	8.7t	

フルオートラフィングジブ

FLJ	1.6m + 7.4m	34.1 t	8.0m x 7.5m	360 °	JPN

m	11.4	11.4	11.4	11.4	11.4	15.1	15.1	15.1	15.1	15.1	15.1	15.1	15.1	15.1	15.1	15.1	15.1	15.1	15.1	15.1	18.8	18.8	18.8	18.8	18.8	m
°	5	15	30	45	60	5	15	30	45	60	5	15	30	45	60	5	15	30	45	60	5	15	30	45	60	°
3.0	7.3					7.3					7.3					7.3					7.3					3.0
3.5	7.3					7.3					7.3					7.3					7.3					3.5
4.0	7.3	7.3				7.3	7.3				7.3	7.3				7.3	7.3				7.3					4.0
4.5	7.3	7.3				7.3	7.3				7.3	7.3				7.3	7.3				7.3					4.5
5.0	7.3	7.3	7.3			7.3	7.3				7.3	7.3				7.3	7.3				7.3	7.3				5.0
6.0	7.3	7.3	7.3			7.3	7.3	7.3			7.3	7.3	7.3			7.3	7.3	7.3			7.3	7.3	7.3			6.0
7.0	7.3	7.3	7.3	6.5	5.0	7.3	7.3	7.3	6.7		7.3	7.3	7.3	6.7		7.3	7.3	7.3	6.7		7.3	7.3	7.3			7.0
8.0	7.3	7.3	7.3	6.3	4.9	7.3	7.3	7.3	6.5	5.0	7.3	7.3	7.3	6.5	5.0	7.3	7.3	7.3	6.5	5.0	7.3	7.3	7.3	6.6	5.0	8.0
9.0	7.3	7.3	7.2	6.0		7.3	7.3	7.3	6.3	4.9	7.3	7.3	7.3	6.3	4.9	7.3	7.3	7.3	6.3	4.9	7.3	7.3	7.3	6.4	4.9	9.0
10.0	7.3	7.3	6.9	5.9		7.3	7.3	7.3	6.1		7.3	7.3	7.3	6.1		7.3	7.3	7.3	6.1		7.3	7.3	7.3	6.3	4.9	10.0
11.0	7.3	7.3	6.6	5.7		7.3	7.3	7.0	5.9		7.3	7.3	7.0	5.9		7.3	7.3	7.0	5.9		7.3	7.3	7.3	6.1		11.0
12.0	7.3	7.0	6.3			7.3	7.3	6.8	5.8		7.3	7.3	6.8	5.8		7.3	7.3	6.8	5.8		7.3	7.3	7.2	6.0		12.0
14.0	6.4	6.2	5.9			7.3	7.1	6.3			7.3	7.1	6.3			7.3	7.1	6.3			7.3	7.3	6.7	5.7		14.0
16.0	5.7	5.7				6.8	6.4	5.9			6.8	6.4	5.9			6.8	6.4	5.9			7.3	7.1	6.3			16.0
18.0						6.0	5.9				6.0	5.9				6.0	5.9				7.0	6.6	6.0			18.0
20.0						5.5					5.5					5.5					6.3	6.1				20.0
22.0																					5.8	5.7				22.0
24.0																					5.3					24.0
26.0																										26.0
28.0																										28.0
30.0																										30.0
32.0																										32.0
34.0																										34.0
36.0																										36.0
38.0																										38.0
40.0																										40.0
42.0																										42.0
44.0																										44.0
46.0																										46.0
48.0																										48.0
50.0																										50.0
52.0																										52.0
54.0																										54.0
56.0																										56.0
58.0																										58.0
60.0																										60.0
64.0																										64.0
1	0	0	0	0	0	0	0	0	0	0	0	0	0	0	0	0	0	0	0	0	0	0	0	0	0	1
2	0	0	0	0	0	0	0	0	0	0	0	0	0	0	0	46	46	46	46	46	0	0	0	0	0	2
3	0	0	0	0	0	0	0	0	0	0	46	46	46	46	46	0	0	0	0	0	0	0	0	0	0	3
4	0	0	0	0	0	46	46	46	46	46	0	0	0	0	0	0	0	0	0	0	0	0	0	0	0	4
5	0	0	0	0	0	0	0	0	0	0	0	0	0	0	0	0	0	0	0	0	46	46	46	46	46	5
6	0	0	0	0	0	0	0	0	0	0	0	0	0	0	0	0	0	0	0	0	46	46	46	46	46	6
ID	1	1	1	1	1	76	76	76	76	76	105	105	105	105	105	131	131	131	131	131	30	30	30	30	30	ID
[DEG]	0~84.7	0~84.7	0~84.7	0~84.7	0~84.7	24~84.7	37~84.7	48~84.7	64~84.7	75~84.7	24~84.7	37~84.7	48~84.7	64~84.7	75~84.7	24~84.7	37~84.7	48~84.7	64~84.7	75~84.7	22~84.7	34~84.7	50~84.7	63~84.7	75~84.7	[DEG]
	1	1	1	1	1	1	1	1	1	1	1	1	1	1	1	1	1	1	1	1	1	1	1	1	1	
	8.7t	8.7t	8.7t	8.7t	8.7t	8.7t	8.7t	8.7t	8.7t	8.7t	8.7t	8.7t	8.7t	8.7t	8.7t	8.7t	8.7t	8.7t	8.7t	8.7t	8.7t	8.7t	8.7t	8.7t	8.7t	

m	18.8	18.8	18.8	18.8	18.8	18.8	18.8	18.8	18.8	18.8	18.8	18.8	18.8	18.8	18.8	22.6	22.6	22.6	22.6	22.6	26.3	26.3	26.3	26.3	26.3	m
°	5	15	30	45	60	5	15	30	45	60	5	15	30	45	60	5	15	30	45	60	5	15	30	45	60	°
3.0	7.3					7.3					7.3															3.0
3.5	7.3					7.3					7.3															3.5
4.0	7.3					7.3	7.3				7.3	7.3				7.3										4.0
4.5	7.3					7.3	7.3				7.3	7.3				7.3										4.5
5.0	7.3	7.3				7.3	7.3				7.3	7.3				7.3	7.3				7.3					5.0
6.0	7.3	7.3	7.3			7.3	7.3	7.3			7.3	7.3	7.3			7.3	7.3				7.3	7.3				6.0
7.0	7.3	7.3	7.3	6.9		7.3	7.3	7.3	6.9		7.3	7.3	7.3	6.9		7.3	7.3	7.3			7.3	7.3				7.0
8.0	7.3	7.3	7.3	6.6	5.0	7.3	7.3	7.3	6.6	5.0	7.3	7.3	7.3	6.6	5.0	7.3	7.3	7.3	6.8		7.3	7.3	7.3			8.0
9.0	7.3	7.3	7.3	6.4	4.9	7.3	7.3	7.3	6.4	4.9	7.3	7.3	7.3	6.4	4.9	7.3	7.3	7.3	6.6	5.0	7.3	7.3	7.3	6.7	5.0	9.0
10.0	7.3	7.3	7.3	6.3	4.9	7.3	7.3	7.3	6.3	4.9	7.3	7.3	7.3	6.3	4.9	7.3	7.3	7.3	6.4	4.9	7.3	7.3	7.3	6.5	4.9	10.0
11.0	7.3	7.3	7.3	6.1		7.3	7.3	7.3	6.1		7.3	7.3	7.3	6.1		7.3	7.3	7.3	6.3	4.8	7.3	7.3	7.3	6.4	4.9	11.0
12.0	7.3	7.3	7.2	6.0		7.3	7.3	7.2	6.0		7.3	7.3	7.2	6.0		7.3	7.3	7.3	6.1		7.3	7.3	7.3	6.3	4.8	12.0
14.0	7.3	7.3	6.7	5.7		7.3	7.3	6.7	5.7		7.3	7.3	6.7	5.7		7.2	6.9	6.5	5.9		7.3	7.3	7.3	6.0		14.0
16.0	7.3	7.1	6.3			7.3	7.1	6.3			7.3	7.1	6.3			6.4	6.1	5.9	5.7		7.3	7.3	7.0	5.8		16.0
18.0	7.0	6.6	6.0			7.0	6.6	6.0			7.0	6.6	6.0			5.7	5.5	5.3			7.3	7.3	6.6	5.7		18.0
20.0	6.3	6.1				6.3	6.1				6.3	6.1				5.1	5.0	4.9			7.3	7.2	6.3			20.0
22.0	5.8	5.7				5.8	5.7				5.8	5.7				4.6	4.5	4.5			7.3	6.8	6.1			22.0
24.0	5.3					5.3					5.3					4.2	4.1				6.8	6.4	5.9			24.0
26.0																3.8	3.8				6.3	6.0				26.0
28.0																					5.8	5.7				28.0
30.0																					5.4					30.0
32.0																										32.0
34.0																										34.0
36.0																										36.0
38.0																										38.0
40.0																										40.0
42.0																										42.0
44.0																										44.0
46.0																										46.0
48.0																										48.0
50.0																										50.0
52.0																										52.0
54.0																										54.0
56.0																										56.0
58.0																										58.0
60.0																										60.0
64.0																										64.0
1	0	0	0	0	0	0	0	0	0	0	0	0	0	0	0	0	0	0	0	0	92	92	92	92	92	1
2	0	0	0	0	0	0	0	0	0	0	46	46	46	46	46	0	0	0	0	0	92	92	92	92	92	2
3	0	0	0	0	0	46	46	46	46	46	46	46	46	46	46	0	0	0	0	0	0	0	0	0	0	3
4	46	46	46	46	46	46	46	46	46	46	0	0	0	0	0	0	0	0	0	0	0	0	0	0	0	4
5	46	46	46	46	46	0	0	0	0	0	0	0	0	0	0	46	46	46	46	46	0	0	0	0	0	5
6	0	0	0	0	0	0	0	0	0	0	0	0	0	0	0	92	92	92	92	92	0	0	0	0	0	6
ID	58	58	58	58	58	88	88	88	88	88	113	113	113	113	113	20	20	20	20	20	134	134	134	134	134	ID
[DEG]	21~84.7	33~84.7	50~84.7	63~84.7	75~84.7	21~84.7	33~84.7	50~84.7	63~84.7	75~84.7	21~84.7	33~84.7	50~84.7	63~84.7	75~84.7	29~84.7	30~84.7	46~84.7	63~84.7	76~84.7	27~84.7	35~84.7	48~84.7	63~84.7	76~84.7	[DEG]
	1	1	1	1	1	1	1	1	1	1	1	1	1	1	1	1	1	1	1	1	1	1	1	1	1	
	8.7t	8.7t	8.7t	8.7t	8.7t	8.7t	8.7t	8.7t	8.7t	8.7t	8.7t	8.7t	8.7t	8.7t	8.7t	8.7t	8.7t	8.7t	8.7t	8.7t	8.7t	8.7t	8.7t	8.7t	8.7t	

FLJ	1.6m + 7.4m	34.1 t	8.0m x 7.5m	360 °	JPN

m	30.0	30.0	30.0	30.0	30.0	30.0	30.0	30.0	30.0	30.0	33.7	33.7	33.7	33.7	33.7	37.4	37.4	37.4	37.4	37.4	37.4	37.4	37.4	37.4	37.4	m
°	5	15	30	45	60	5	15	30	45	60	5	15	30	45	60	5	15	30	45	60	5	15	30	45	60	°
3.0																										3.0
3.5																										3.5
4.0																										4.0
4.5																										4.5
5.0	7.3					7.3																				5.0
6.0	7.3	7.3				7.3	7.3				7.3															6.0
7.0	7.3	7.3				7.3	7.3				7.3	7.3				7.1					7.3					7.0
8.0	7.3	7.3	7.3			7.3	7.3	7.3			7.3	7.3				7.1	7.1				7.3	7.3				8.0
9.0	7.3	7.3	7.3			7.3	7.3	7.3	6.8		7.3	7.3	7.3			7.1	7.1				7.3	7.3				9.0
10.0	7.3	7.3	7.3	6.6	5.0	7.3	7.3	7.3	6.6	5.0	7.3	7.3	7.3	6.7		7.1	7.1	7.1			7.3	7.3	7.3			10.0
11.0	7.3	7.3	7.3	6.5	4.9	7.3	7.3	7.3	6.5	4.9	7.3	7.3	7.3	6.6	4.9	7.1	7.1	7.1	6.7	5.0	7.3	7.3	7.2	6.7		11.0
12.0	7.3	7.3	7.1	6.4	4.9	7.3	7.3	7.3	6.4	4.9	7.3	7.3	7.3	6.5	4.9	7.1	7.1	7.1	6.6	4.9	7.3	7.3	6.9	6.4	4.9	12.0
14.0	6.8	6.6	6.3	6.1		7.3	7.3	7.3	6.1		7.3	7.3	7.3	6.2	4.8	7.1	7.1	7.1	6.3	4.8	6.9	6.6	6.2	5.9	4.8	14.0
16.0	6.0	5.8	5.6	5.5		7.3	7.3	7.2	5.9		7.3	7.3	7.3	6.0		7.1	7.1	7.1	6.1		6.1	5.9	5.7	5.5		16.0
18.0	5.3	5.2	5.1	5.0		7.3	7.3	6.9	5.8		7.3	7.3	7.1	5.9		7.1	7.1	7.1	6.0		5.5	5.4	5.2	5.0		18.0
20.0	4.8	4.7	4.6	4.5		7.3	7.3	6.6	5.6		7.3	7.3	6.8	5.7		7.1	7.1	7.1	5.8		5.0	4.9	4.7	4.6		20.0
22.0	4.3	4.3	4.2			7.3	7.3	6.3			7.3	7.3	6.5	5.6		7.1	7.1	6.8	5.7		4.6	4.5	4.3	4.3		22.0
24.0	3.9	3.9	3.8			7.3	6.8	6.1			7.3	7.3	6.3			7.1	7.1	6.5	5.6		4.2	4.1	4.0	4.0		24.0
26.0	3.5	3.5	3.5			6.9	6.5	5.9			6.9	6.9	6.1			6.5	6.5	6.3			3.9	3.8	3.7			26.0
28.0	3.2	3.1				6.4	6.1				6.3	6.3	5.9			5.9	6.0	6.0			3.6	3.5	3.5			28.0
30.0	2.8	2.8				5.5	5.7				5.5	5.7	5.8			5.4	5.4	5.5			3.4	3.3	3.2			30.0
32.0	2.5	2.5				4.5	4.7				4.5	4.7				4.7	4.8	5.0			3.1	3.1	3.0			32.0
34.0	2.2					3.7					3.7	3.8				3.8	4.0				2.8	2.8				34.0
36.0											3.0					3.1	3.2				2.6	2.6				36.0
38.0											2.3					2.5	2.6				2.4	2.3				38.0
40.0																1.9					2.2					40.0
42.0																										42.0
44.0																										44.0
46.0																										46.0
48.0																										48.0
50.0																										50.0
52.0																										52.0
54.0																										54.0
56.0																										56.0
58.0																										58.0
60.0																										60.0
64.0																										64.0
1	0	0	0	0	0	92	92	92	92	92	92	92	92	92	92	92	92	92	92	92	0	0	0	0	0	1
2	0	0	0	0	0	92	92	92	92	92	92	92	92	92	92	92	92	92	92	92	0	0	0	0	0	2
3	0	0	0	0	0	46	46	46	46	46	92	92	92	92	92	92	92	92	92	92	46	46	46	46	46	3
4	46	46	46	46	46	0	0	0	0	0	0	0	0	0	0	46	46	46	46	46	92	92	92	92	92	4
5	92	92	92	92	92	0	0	0	0	0	0	0	0	0	0	0	0	0	0	0	92	92	92	92	92	5
6	92	92	92	92	92	0	0	0	0	0	0	0	0	0	0	0	0	0	0	0	92	92	92	92	92	6
ID	22	22	22	22	22	116	116	116	116	116	110	110	110	110	110	93	93	93	93	93	24	24	24	24	24	ID
[DEG]	24~84.7	32~84.7	50~84.7	63~84.7	78~84.7	24~84.7	33~84.7	50~84.7	63~84.7	78~84.7	23~84.7	37~84.7	47~84.7	63~84.7	76~84.7	28~84.7	34~84.7	49~84.7	63~84.7	78~84.7	28~84.7	35~84.7	49~84.7	63~84.7	78~84.7	[DEG]
	1	1	1	1	1	1	1	1	1	1	1	1	1	1	1	1	1	1	1	1	1	1	1	1	1	
	8.7t	8.7t	8.7t	8.7t	8.7t	8.7t	8.7t	8.7t	8.7t	8.7t	8.7t	8.7t	8.7t	8.7t	8.7t	8.7t	8.7t	8.7t	8.7t	8.7t	8.7t	8.7t	8.7t	8.7t	8.7t	

m	41.2	41.2	41.2	41.2	41.2	44.9	44.9	44.9	44.9	44.9	44.9	44.9	44.9	44.9	44.9	48.6	48.6	48.6	48.6	48.6	48.6	48.6	48.6	48.6	48.6	m
°	5	15	30	45	60	5	15	30	45	60	5	15	30	45	60	5	15	30	45	60	5	15	30	45	60	°
3.0																										3.0
3.5																										3.5
4.0																										4.0
4.5																										4.5
5.0																										5.0
6.0																										6.0
7.0	7.3																									7.0
8.0	7.3										6.5															8.0
9.0	7.3	7.3				4.6					6.5					4.8					5.4					9.0
10.0	7.3	7.3	7.3			4.6	4.6				6.5	6.5				4.8					5.4					10.0
11.0	7.3	7.3	7.3			4.6	4.6				6.5	6.5	6.5			4.8	4.8				5.4	5.4				11.0
12.0	7.3	7.3	7.3	6.6	4.9	4.6	4.6	4.6			6.5	6.5	6.5			4.8	4.8	4.8			5.4	5.4	5.4			12.0
14.0	7.3	7.3	7.3	6.4	4.9	4.6	4.6	4.6	4.6	4.6	6.5	6.5	6.5	6.5	4.9	4.8	4.8	4.8	4.8	4.8	5.4	5.4	5.4	5.4	4.9	14.0
16.0	7.3	7.3	7.3	6.2		4.6	4.6	4.6	4.6	4.6	6.5	6.5	6.5	6.3	4.8	4.8	4.8	4.8	4.8	4.8	5.4	5.4	5.4	5.4	4.8	16.0
18.0	7.3	7.3	7.2	6.1		4.6	4.6	4.6	4.6		6.5	6.5	6.5	6.1		4.8	4.8	4.8	4.8		5.4	5.4	5.4	5.4		18.0
20.0	7.3	7.3	7.1	5.9		4.6	4.6	4.6	4.6		6.5	6.5	6.5	6.0		4.8	4.8	4.8	4.8		5.4	5.4	5.4	5.4		20.0
22.0	7.3	7.3	6.8	5.8		4.6	4.5	4.3	4.2		6.5	6.5	6.5	5.9		4.8	4.8	4.8	4.7		5.4	5.4	5.4	5.4		22.0
24.0	6.7	6.7	6.6	5.7		4.3	4.2	4.0	4.0		6.3	6.3	6.4	5.8		4.8	4.8	4.6	4.5		5.4	5.4	5.4	5.4		24.0
26.0	6.1	6.1	6.2	5.6		4.0	3.9	3.8	3.7		5.8	5.8	5.9	5.7		4.7	4.5	4.3	4.2		5.4	5.4	5.3	5.3		26.0
28.0	5.5	5.6	5.7			3.7	3.6	3.5	3.5		5.3	5.3	5.4	5.5		4.4	4.2	4.1	4.0		5.0	5.0	5.0	5.0		28.0
30.0	5.0	5.1	5.2			3.5	3.4	3.3			4.8	4.9	4.9			4.1	4.0	3.9	3.8		4.6	4.6	4.7	4.7		30.0
32.0	4.6	4.6	4.7			3.3	3.2	3.1			4.4	4.4	4.5			3.9	3.8	3.7			4.2	4.2	4.3			32.0
34.0	3.9	4.1	4.3			3.1	3.0	3.0			4.0	4.1	4.1			3.7	3.6	3.5			3.8	3.9	3.9			34.0
36.0	3.2	3.4				2.9	2.9	2.8			3.4	3.6	3.7			3.5	3.4	3.3			3.5	3.5	3.6			36.0
38.0	2.6	2.7				2.7	2.7				2.8	2.9				3.3	3.3	3.2			2.9	3.1	3.2			38.0
40.0	2.0	2.1				2.5	2.5				2.2	2.3				3.0	3.1	3.1			2.4	2.5	2.6			40.0
42.0	1.5	1.6				2.3	2.3				1.7	1.8				2.5	2.6				1.8	2.0				42.0
44.0	1.0					2.2	2.1				1.2	1.3				2.0	2.1				1.4	1.5				44.0
46.0						2.0										1.6	1.7				1.0	1.0				46.0
48.0						1.9										1.2	1.3									48.0
50.0																0.9										50.0
52.0																										52.0
54.0																										54.0
56.0																										56.0
58.0																										58.0
60.0																										60.0
64.0																										64.0
1	92	92	92	92	92	0	0	0	0	0	92	92	92	92	92	46	46	46	46	46	92	92	92	92	92	1
2	92	92	92	92	92	46	46	46	46	46	92	92	92	92	92	92	92	92	92	92	92	92	92	92	92	2
3	92	92	92	92	92	92	92	92	92	92	92	92	92	92	92	92	92	92	92	92	92	92	92	92	92	3
4	92	92	92	92	92	92	92	92	92	92	92	92	92	92	92	92	92	92	92	92	92	92	92	92	92	4
5	0	0	0	0	0	92	92	92	92	92	46	46	46	46	46	92	92	92	92	92	92	92	92	92	92	5
6	0	0	0	0	0	92	92	92	92	92	0	0	0	0	0	46	46	46	46	46	0	0	0	0	0	6
ID	83	83	83	83	83	26	26	26	26	26	65	65	65	65	65	38	38	38	38	38	49	49	49	49	49	ID
[DEG]	26~84.7	33~84.7	50~84.7	63~84.7	79~84.7	26~84.7	36~84.7	51~84.7	63~84.7	78~84.7	35~84.7	36~84.7	51~84.7	64~84.7	78~84.7	29~84.7	34~84.7	50~84.7	63~84.7	79~84.7	37~84.7	38~84.7	49~84.7	64~84.7	79~84.7	[DEG]
	1	1	1	1	1	1	1	1	1	1	1	1	1	1	1	1	1	1	1	1	1	1	1	1	1	
	8.7t	8.7t	8.7t	8.7t	8.7t	8.7t	8.7t	8.7t	8.7t	8.7t	8.7t	8.7t	8.7t	8.7t	8.7t	8.7t	8.7t	8.7t	8.7t	8.7t	8.7t	8.7t	8.7t	8.7t	8.7t	

フルオートラフィングジブ

FLJ	1.6m + 7.4m	34.1 t	8.0m x 7.5m	360 °	JPN

m	52.3	52.3	52.3	52.3	52.3	52.3	52.3	52.3	52.3	52.3	56.0	56.0	56.0	56.0	56.0	60.0	60.0	60.0	60.0	60.0						m
°	5	15	30	45	60	5	15	30	45	60	5	15	30	45	60	5	15	30	45	60						°
3.0																										3.0
3.5																										3.5
4.0																										4.0
4.5																										4.5
5.0																										5.0
6.0																										6.0
7.0																										7.0
8.0																										8.0
9.0																										9.0
10.0	3.9					4.4																				10.0
11.0	3.9					4.4					3.7															11.0
12.0	3.9	3.9				4.4	4.4				3.7															12.0
14.0	3.9	3.9	3.9			4.4	4.4	4.4			3.7	3.7	3.7			3.2	3.2									14.0
16.0	3.9	3.9	3.9	3.9	3.9	4.4	4.4	4.4	4.4	4.4	3.7	3.7	3.7	3.7	3.7	3.2	3.2	3.2	3.2							16.0
18.0	3.9	3.9	3.9	3.9	3.9	4.4	4.4	4.4	4.4	4.4	3.7	3.7	3.7	3.7	3.7	3.2	3.2	3.2	3.2	3.2						18.0
20.0	3.9	3.9	3.9	3.9		4.4	4.4	4.4	4.4		3.7	3.7	3.7	3.7		3.2	3.2	3.2	3.2	3.2						20.0
22.0	3.9	3.9	3.9	3.9		4.4	4.4	4.4	4.4		3.7	3.7	3.7	3.7		3.2	3.2	3.2	3.2							22.0
24.0	3.9	3.9	3.9	3.9		4.4	4.4	4.4	4.4		3.7	3.7	3.7	3.7		3.2	3.2	3.2	3.2							24.0
26.0	3.9	3.9	3.7	3.6		4.4	4.4	4.2	4.1		3.7	3.7	3.7	3.6		3.2	3.2	3.2	3.2							26.0
28.0	3.7	3.6	3.5	3.4		4.3	4.2	4.0	3.9		3.7	3.6	3.5	3.4		3.2	3.2	3.2	3.2							28.0
30.0	3.5	3.4	3.3	3.2		4.1	3.9	3.8	3.7		3.5	3.4	3.3	3.2		3.2	3.2	3.1	3.0							30.0
32.0	3.3	3.2	3.1			3.9	3.7	3.6			3.3	3.2	3.1	3.0		3.0	3.0	2.9	2.8							32.0
34.0	3.1	3.0	2.9			3.7	3.6	3.4			3.1	3.0	2.9			2.9	2.8	2.7	2.7							34.0
36.0	2.9	2.9	2.8			3.4	3.4	3.3			2.9	2.8	2.8			2.7	2.7	2.6								36.0
38.0	2.8	2.7	2.7			3.1	3.2	3.1			2.8	2.7	2.6			2.6	2.5	2.5								38.0
40.0	2.6	2.6	2.5			2.6	2.7	2.9			2.6	2.6	2.5			2.4	2.4	2.3								40.0
42.0	2.5	2.5	2.4			2.1	2.2	2.3			2.3	2.4	2.4			2.2	2.3	2.2								42.0
44.0	2.2	2.3				1.6	1.7				1.8	1.9	2.0			1.7	1.8	2.0								44.0
46.0	1.8	1.9				1.2	1.3				1.4	1.5				1.3	1.4	1.5								46.0
48.0	1.4	1.5					0.9				1.0	1.1				0.9	1.0	1.1								48.0
50.0	1.0	1.1																								50.0
52.0																										52.0
54.0																										54.0
56.0																										56.0
58.0																										58.0
60.0																										60.0
64.0																										64.0
1	46	46	46	46	46	92	92	92	92	92	92	92	92	92	92	100	100	100	100	100						1
2	92	92	92	92	92	92	92	92	92	92	92	92	92	92	92	100	100	100	100	100						2
3	92	92	92	92	92	92	92	92	92	92	92	92	92	92	92	100	100	100	100	100						3
4	92	92	92	92	92	92	92	92	92	92	92	92	92	92	92	100	100	100	100	100						4
5	92	92	92	92	92	92	92	92	92	92	92	92	92	92	92	100	100	100	100	100						5
6	92	92	92	92	92	46	46	46	46	46	92	92	92	92	92	100	100	100	100	100						6
ID	28	28	28	28	28	39	39	39	39	39	29	29	29	29	29	19	19	19	19	19						ID
[DEG]	36~84.7	37~84.7	51~84.7	66~84.7	78~84.7	43~84.7	40~84.7	51~84.7	66~84.7	78~84.7	44~84.7	45~84.7	52~84.7	66~84.7	79~84.7	49~84.7	50~84.7	50~84.7	66~84.7	79~84.7						[DEG]
	1	1	1	1	1	1	1	1	1	1	1	1	1	1	1	1	1	1	1	1						
	8.7t	8.7t	8.7t	8.7t	8.7t	8.7t	8.7t	8.7t	8.7t	8.7t	8.7t	8.7t	8.7t	8.7t	8.7t	8.7t	8.7t	8.7t	8.7t	8.7t						

FLJ	1.6m + 12.4m	34.1 t	8.0m x 7.5m	360 °	JPN

m	11.4	11.4	11.4	11.4	11.4	15.1	15.1	15.1	15.1	15.1	15.1	15.1	15.1	15.1	15.1	15.1	15.1	15.1	15.1	15.1	18.8	18.8	18.8	18.8	18.8	m
°	5	15	30	45	60	5	15	30	45	60	5	15	30	45	60	5	15	30	45	60	5	15	30	45	60	°
3.0	4.3																									3.0
3.5	4.3																									3.5
4.0	4.3					4.3					4.3					4.3					4.3					4.0
4.5	4.3					4.3					4.3					4.3					4.3					4.5
5.0	4.3					4.3					4.3					4.3					4.3					5.0
6.0	4.3	4.3				4.3	4.3				4.3	4.3				4.3	4.3				4.3					6.0
7.0	4.3	4.3				4.3	4.3				4.3	4.3				4.3	4.3				4.3	4.3				7.0
8.0	4.3	4.3				4.3	4.3				4.3	4.3				4.3	4.3				4.3	4.3				8.0
9.0	4.3	4.3	4.3			4.3	4.3	4.3			4.3	4.3	4.3			4.3	4.3	4.3			4.3	4.3				9.0
10.0	4.3	4.3	4.1			4.3	4.3	4.3			4.3	4.3	4.3			4.3	4.3	4.3			4.3	4.3	4.3			10.0
11.0	4.3	4.3	3.9	3.2		4.3	4.3	4.1	3.3		4.3	4.3	4.1	3.3		4.3	4.3	4.1	3.3		4.3	4.3	4.1			11.0
12.0	4.3	4.3	3.7	3.1		4.3	4.3	3.9	3.2		4.3	4.3	3.9	3.2		4.3	4.3	3.9	3.2		4.3	4.3	3.9	3.3		12.0
14.0	4.3	4.0	3.3	2.9		4.3	4.3	3.5	3.0		4.3	4.3	3.5	3.0		4.3	4.3	3.5	3.0		4.3	4.3	3.7	3.1		14.0
16.0	3.8	3.5	3.0	2.7		4.3	3.9	3.3	2.8		4.3	3.9	3.3	2.8		4.3	3.9	3.3	2.8		4.3	4.1	3.4	2.9		16.0
18.0	3.4	3.2	2.8			3.9	3.6	3.0	2.7		3.9	3.6	3.0	2.7		3.9	3.6	3.0	2.7		4.3	3.8	3.2	2.8		18.0
20.0	3.0	2.9				3.5	3.3	2.9			3.5	3.3	2.9			3.5	3.3	2.9			4.0	3.5	3.0	2.7		20.0
22.0	2.7					3.2	3.0				3.2	3.0				3.2	3.0				3.6	3.3	2.9			22.0
24.0						2.9	2.8				2.9	2.8				2.9	2.8				3.3	3.1	2.8			24.0
26.0																					3.0	2.9				26.0
28.0																					2.8					28.0
30.0																										30.0
32.0																										32.0
34.0																										34.0
36.0																										36.0
38.0																										38.0
40.0																										40.0
42.0																										42.0
44.0																										44.0
46.0																										46.0
48.0																										48.0
50.0																										50.0
52.0																										52.0
54.0																										54.0
56.0																										56.0
58.0																										58.0
60.0																										60.0
64.0																										64.0
1	0	0	0	0		0	0	0	0		0	0	0	0		0	0	0	0		0	0	0	0		1
2	0	0	0	0		0	0	0	0		0	0	0	0		46	46	46	46		0	0	0	0		2
3	0	0	0	0		0	0	0	0		46	46	46	46		0	0	0	0		0	0	0	0		3
4	0	0	0	0		46	46	46	46		0	0	0	0		0	0	0	0		0	0	0	0		4
5	0	0	0	0		0	0	0	0		0	0	0	0		0	0	0	0		46	46	46	46		5
6	0	0	0	0		0	0	0	0		0	0	0	0		0	0	0	0		46	46	46	46		6
ID	1	1	1	1		76	76	76	76		105	105	105	105		131	131	131	131		30	30	30	30		ID
[DEG]	0~84.7	0~84.7	0~84.7	0~84.7		29~84.7	32~84.7	51~84.7	60~84.7		29~84.7	32~84.7	51~84.7	60~84.7		29~84.7	31~84.7	51~84.7	60~84.7		26~84.7	37~84.7	46~84.7	60~84.7		[DEG]
	1	1	1	1		1	1	1	1		1	1	1	1		1	1	1	1		1	1	1	1		
	8.7t	8.7t	8.7t	8.7t		8.7t	8.7t	8.7t	8.7t		8.7t	8.7t	8.7t	8.7t		8.7t	8.7t	8.7t	8.7t		8.7t	8.7t	8.7t	8.7t		

FLJ	1.6m + 12.4m	34.1 t	8.0m x 7.5m	360 °	JPN

m	18.8	18.8	18.8	18.8	18.8	18.8	18.8	18.8	18.8	18.8	18.8	18.8	18.8	18.8	18.8	22.6	22.6	22.6	22.6	22.6	26.3	26.3	26.3	26.3	26.3	m
°	5	15	30	45	60	5	15	30	45	60	5	15	30	45	60	5	15	30	45	60	5	15	30	45	60	°
3.0																										3.0
3.5																										3.5
4.0	4.3					4.3					4.3															4.0
4.5	4.3					4.3					4.3															4.5
5.0	4.3					4.3					4.3					4.3										5.0
6.0	4.3					4.3					4.3					4.3					4.3					6.0
7.0	4.3	4.3				4.3	4.3				4.3	4.3				4.3	4.3				4.3					7.0
8.0	4.3	4.3				4.3	4.3				4.3	4.3				4.3	4.3				4.3	4.3				8.0
9.0	4.3	4.3				4.3	4.3				4.3	4.3				4.3	4.3				4.3	4.3				9.0
10.0	4.3	4.3	4.3			4.3	4.3	4.3			4.3	4.3	4.3			4.3	4.3				4.3	4.3				10.0
11.0	4.3	4.3	4.1			4.3	4.3	4.2			4.3	4.3	4.2			4.3	4.3	4.1			4.3	4.3	4.3			11.0
12.0	4.3	4.3	4.0	3.3		4.3	4.3	4.0	3.3		4.3	4.3	4.0	3.3		4.3	4.3	4.0			4.3	4.3	4.2			12.0
14.0	4.3	4.3	3.7	3.1		4.3	4.3	3.7	3.1		4.3	4.3	3.7	3.1		4.3	4.3	3.7	3.1		4.3	4.3	3.9	3.2	2.7	14.0
16.0	4.3	4.1	3.5	2.9		4.3	4.2	3.5	2.9		4.3	4.2	3.5	2.9		4.3	4.2	3.5	3.0		4.3	4.3	3.7	3.0	2.6	16.0
18.0	4.3	3.8	3.2	2.8		4.3	3.8	3.2	2.8		4.3	3.9	3.2	2.8		4.3	3.9	3.3	2.9		4.3	4.2	3.5	2.9		18.0
20.0	4.0	3.6	3.0	2.7		4.0	3.6	3.0	2.7		4.0	3.6	3.0	2.7		4.2	3.7	3.1	2.8		4.3	4.0	3.3	2.8		20.0
22.0	3.6	3.3	2.9			3.6	3.3	2.9			3.6	3.3	2.9			3.9	3.4	3.0			4.3	3.7	3.2	2.7		22.0
24.0	3.3	3.1	2.8			3.3	3.1	2.8			3.3	3.1	2.8			3.6	3.3	2.9			4.0	3.5	3.0			24.0
26.0	3.0	2.9				3.0	2.9				3.0	2.9				3.4	3.1	2.8			3.8	3.3	2.9			26.0
28.0	2.8					2.8					2.8					3.2	3.0				3.5	3.2	2.8			28.0
30.0																2.9	2.8				3.3	3.0				30.0
32.0																2.7					3.1	2.9				32.0
34.0																					2.9	2.8				34.0
36.0																					2.7					36.0
38.0																										38.0
40.0																										40.0
42.0																										42.0
44.0																										44.0
46.0																										46.0
48.0																										48.0
50.0																										50.0
52.0																										52.0
54.0																										54.0
56.0																										56.0
58.0																										58.0
60.0																										60.0
64.0																										64.0
1	0	0	0	0		0	0	0	0		0	0	0	0		0	0	0	0		92	92	92	92	92	1
2	0	0	0	0		0	0	0	0		46	46	46	46		0	0	0	0		92	92	92	92	92	2
3	0	0	0	0		46	46	46	46		46	46	46	46		0	0	0	0		0	0	0	0	0	3
4	46	46	46	46		46	46	46	46		0	0	0	0		0	0	0	0		0	0	0	0	0	4
5	46	46	46	46		0	0	0	0		0	0	0	0		46	46	46	46		0	0	0	0	0	5
6	0	0	0	0		0	0	0	0		0	0	0	0		92	92	92	92		0	0	0	0	0	6
ID	58	58	58	58		88	88	88	88		113	113	113	113		20	20	20	20		134	134	134	134	134	ID
[DEG]	26~84.7	37~84.7	46~84.7	60~84.7		26~84.7	37~84.7	46~84.7	60~84.7		26~84.7	37~84.7	46~84.7	60~84.7		24~84.7	34~84.7	49~84.7	65~84.7		22~84.7	31~84.7	50~84.7	64~84.7	77~84.7	[DEG]
	1	1	1	1		1	1	1	1		1	1	1	1		1	1	1	1		1	1	1	1	1	
	8.7t	8.7t	8.7t	8.7t		8.7t	8.7t	8.7t	8.7t		8.7t	8.7t	8.7t	8.7t		8.7t	8.7t	8.7t	8.7t		8.7t	8.7t	8.7t	8.7t	8.7t	

m	30.0	30.0	30.0	30.0	30.0	30.0	30.0	30.0	30.0	30.0	33.7	33.7	33.7	33.7	33.7	37.4	37.4	37.4	37.4	37.4	37.4	37.4	37.4	37.4	37.4	m
°	5	15	30	45	60	5	15	30	45	60	5	15	30	45	60	5	15	30	45	60	5	15	30	45	60	°
3.0																										3.0
3.5																										3.5
4.0																										4.0
4.5																										4.5
5.0																										5.0
6.0	4.0					4.3																				6.0
7.0	4.0					4.3					4.3					4.1										7.0
8.0	4.0					4.3					4.3					4.1					4.3					8.0
9.0	4.0	4.0				4.3	4.3				4.3	4.3				4.1					4.3					9.0
10.0	4.0	4.0				4.3	4.3				4.3	4.3				4.1	4.1				4.3	4.3				10.0
11.0	4.0	4.0				4.3	4.3	4.3			4.3	4.3				4.1	4.1				4.3	4.3				11.0
12.0	4.0	4.0	4.0			4.3	4.3	4.2			4.3	4.3	4.2			4.1	4.1				4.3	4.3				12.0
14.0	4.0	4.0	3.7	3.2		4.3	4.3	3.9	3.2		4.3	4.3	3.9	3.3		4.1	4.1	3.9			4.3	4.3	3.7			14.0
16.0	4.0	4.0	3.5	3.1		4.3	4.3	3.7	3.1		4.3	4.3	3.7	3.2	2.6	4.1	4.1	3.7	3.2	2.6	4.3	4.3	3.5	3.1		16.0
18.0	4.0	4.0	3.4	3.0		4.3	4.3	3.5	3.0		4.3	4.3	3.6	3.0	2.6	4.1	4.1	3.6	3.1	2.6	4.3	4.1	3.4	3.0		18.0
20.0	4.0	3.8	3.2	2.9		4.3	4.1	3.4	2.9		4.3	4.1	3.4	2.9		4.1	4.1	3.4	3.0		4.3	3.9	3.2	2.9		20.0
22.0	4.0	3.6	3.1	2.8		4.3	3.8	3.2	2.8		4.3	3.9	3.3	2.8		4.1	3.9	3.3	2.9		4.2	3.7	3.1	2.8		22.0
24.0	3.7	3.4	3.0	2.7		4.2	3.6	3.1	2.7		4.3	3.7	3.1	2.8		4.1	3.8	3.2	2.8		3.9	3.5	3.0	2.7		24.0
26.0	3.4	3.3	2.9			3.9	3.5	3.0			4.1	3.5	3.0	2.7		4.1	3.6	3.0	2.7		3.6	3.4	2.9	2.7		26.0
28.0	3.1	3.1	2.8			3.7	3.3	2.9			3.9	3.4	2.9			4.0	3.4	2.9	2.7		3.3	3.2	2.8	2.6		28.0
30.0	2.8	2.8	2.7			3.5	3.2	2.8			3.7	3.2	2.8			3.8	3.3	2.9			3.1	3.0	2.7			30.0
32.0	2.5	2.5	2.5			3.4	3.0	2.7			3.5	3.1	2.8			3.6	3.2	2.8			2.9	2.8	2.7			32.0
34.0	2.2	2.2				3.2	2.9				3.3	3.0	2.7			3.4	3.1	2.7			2.7	2.7	2.6			34.0
36.0		2.0				3.0	2.8				3.2	2.9				3.3	3.0	2.7			2.5	2.4	2.4			36.0
38.0						2.8					3.1	2.8				3.2	2.9				2.3	2.2				38.0
40.0												2.8				2.7	2.8				2.1	2.0				40.0
42.0																2.2	2.4				1.9	1.9				42.0
44.0																										44.0
46.0																										46.0
48.0																										48.0
50.0																										50.0
52.0																										52.0
54.0																										54.0
56.0																										56.0
58.0																										58.0
60.0																										60.0
64.0																										64.0
1	0	0	0	0		92	92	92	92		92	92	92	92	92	92	92	92	92	92	0	0	0	0		1
2	0	0	0	0		92	92	92	92		92	92	92	92	92	92	92	92	92	92	0	0	0	0		2
3	0	0	0	0		46	46	46	46		92	92	92	92	92	92	92	92	92	92	46	46	46	46		3
4	46	46	46	46		0	0	0	0		0	0	0	0	0	46	46	46	46	46	92	92	92	92		4
5	92	92	92	92		0	0	0	0		0	0	0	0	0	0	0	0	0	0	92	92	92	92		5
6	92	92	92	92		0	0	0	0		0	0	0	0	0	0	0	0	0	0	92	92	92	92		6
ID	22	22	22	22		116	116	116	116		110	110	110	110	110	93	93	93	93	93	24	24	24	24		ID
[DEG]	39~84.7	36~84.7	47~84.7	64~84.7		28~84.7	36~84.7	47~84.7	64~84.7		37~84.7	34~84.7	49~84.7	64~84.7	77~84.7	35~84.7	37~84.7	50~84.7	64~84.7	79~84.7	36~84.7	37~84.7	50~84.7	64~84.7		[DEG]
	1	1	1	1		1	1	1	1		1	1	1	1	1	1	1	1	1	1	1	1	1	1		
	8.7t	8.7t	8.7t	8.7t		8.7t	8.7t	8.7t	8.7t		8.7t	8.7t	8.7t	8.7t	8.7t	8.7t	8.7t	8.7t	8.7t	8.7t	8.7t	8.7t	8.7t	8.7t		

フルオートラフィングジブ

FLJ	1.6m + 12.4m	34.1 t	8.0m x 7.5m	360 °	JPN

m	41.2	41.2	41.2	41.2	41.2	44.9	44.9	44.9	44.9	44.9	44.9	44.9	44.9	44.9	44.9	48.6	48.6	48.6	48.6	48.6	48.6	48.6	48.6	48.6	48.6	m
°	5	15	30	45	60	5	15	30	45	60	5	15	30	45	60	5	15	30	45	60	5	15	30	45	60	°
3.0																										3.0
3.5																										3.5
4.0																										4.0
4.5																										4.5
5.0																										5.0
6.0																										6.0
7.0																										7.0
8.0	4.3																									8.0
9.0	4.3										4.0															9.0
10.0	4.3					3.0					4.0					3.2					3.6					10.0
11.0	4.3	4.3				3.0					4.0	4.0				3.2					3.6					11.0
12.0	4.3	4.3				3.0	3.0				4.0	4.0				3.2	3.2				3.6	3.6				12.0
14.0	4.3	4.3	3.9			3.0	3.0				4.0	4.0				3.2	3.2				3.6	3.6				14.0
16.0	4.3	4.3	3.7	3.2		3.0	3.0	3.0			4.0	4.0	3.7			3.2	3.2	3.2			3.6	3.6	3.6			16.0
18.0	4.3	4.3	3.5	3.1	2.6	3.0	3.0	3.0	2.9		4.0	4.0	3.5	3.0	2.6	3.2	3.2	3.2	3.0		3.6	3.6	3.5	3.0		18.0
20.0	4.3	4.1	3.4	3.0	2.6	3.0	3.0	3.0	2.9		4.0	4.0	3.4	2.9	2.6	3.2	3.2	3.2	2.9	2.6	3.6	3.6	3.3	2.9	2.6	20.0
22.0	4.3	4.0	3.3	2.9		3.0	3.0	3.0	2.8		4.0	3.9	3.2	2.9		3.2	3.2	3.2	2.8	2.5	3.6	3.6	3.2	2.8	2.5	22.0
24.0	4.3	3.8	3.2	2.8		3.0	3.0	3.0	2.7		4.0	3.7	3.1	2.8		3.2	3.2	3.1	2.7		3.6	3.6	3.1	2.8		24.0
26.0	4.2	3.6	3.0	2.7		3.0	3.0	2.9	2.6		4.0	3.6	3.0	2.7		3.2	3.2	3.0	2.7		3.6	3.5	3.0	2.7		26.0
28.0	4.0	3.5	2.9	2.7		3.0	3.0	2.8	2.6		4.0	3.5	2.9	2.7		3.2	3.2	2.9	2.6		3.6	3.4	2.9	2.6		28.0
30.0	3.8	3.3	2.9	2.6		3.0	3.0	2.7	2.5		3.8	3.3	2.9	2.6		3.2	3.2	2.8	2.6		3.6	3.3	2.8	2.6		30.0
32.0	3.6	3.2	2.8			3.0	2.9	2.7	2.5		3.6	3.2	2.8	2.6		3.2	3.1	2.7	2.5		3.6	3.2	2.8	2.5		32.0
34.0	3.5	3.1	2.7			2.8	2.7	2.6			3.5	3.1	2.7			3.2	3.0	2.6	2.5		3.5	3.1	2.7	2.5		34.0
36.0	3.3	3.0	2.6			2.7	2.6	2.5			3.4	3.0	2.6			3.1	2.9	2.6			3.4	3.0	2.6			36.0
38.0	3.2	2.9	2.6			2.5	2.4	2.4			3.2	2.9	2.6			3.0	2.8	2.5			3.2	2.9	2.5			38.0
40.0	2.8	2.8	2.5			2.3	2.3	2.3			2.9	2.8	2.5			2.8	2.7	2.5			3.0	2.8	2.5			40.0
42.0	2.3	2.4				2.2	2.1	2.1			2.4	2.6	2.5			2.7	2.6	2.4			2.5	2.7	2.5			42.0
44.0	1.8	1.9				2.0	2.0				1.9	2.1				2.6	2.5	2.4			2.0	2.2	2.4			44.0
46.0	1.4	1.5				1.9	1.8				1.5	1.6				2.2	2.4				1.6	1.8				46.0
48.0						1.7	1.7				1.1	1.2				1.8	1.9				1.2	1.4				48.0
50.0						1.6	1.6									1.5	1.6				0.9	1.0				50.0
52.0																1.1	1.2									52.0
54.0																										54.0
56.0																										56.0
58.0																										58.0
60.0																										60.0
64.0																										64.0
1	92	92	92	92	92	0	0	0	0		92	92	92	92	92	46	46	46	46	46	92	92	92	92	92	1
2	92	92	92	92	92	46	46	46	46		92	92	92	92	92	92	92	92	92	92	92	92	92	92	92	2
3	92	92	92	92	92	92	92	92	92		92	92	92	92	92	92	92	92	92	92	92	92	92	92	92	3
4	92	92	92	92	92	92	92	92	92		92	92	92	92	92	92	92	92	92	92	92	92	92	92	92	4
5	0	0	0	0	0	92	92	92	92		46	46	46	46	46	92	92	92	92	92	92	92	92	92	92	5
6	0	0	0	0	0	92	92	92	92		0	0	0	0	0	46	46	46	46	46	0	0	0	0	0	6
ID	83	83	83	83	83	26	26	26	26		65	65	65	65	65	38	38	38	38	38	49	49	49	49	49	ID
[DEG]	34~84.7	35~84.7	48~84.7	64~84.7	78~84.7	33~84.7	34~84.7	50~84.7	64~84.7		36~84.7	38~84.7	50~84.7	64~84.7	79~84.7	35~84.7	36~84.7	51~84.7	64~84.7	78~84.7	38~84.7	40~84.7	51~84.7	64~84.7	78~84.7	[DEG]
	1	1	1	1	1	1	1	1	1		1	1	1	1	1	1	1	1	1	1	1	1	1	1	1	
	8.7t	8.7t	8.7t	8.7t	8.7t	8.7t	8.7t	8.7t	8.7t		8.7t	8.7t	8.7t	8.7t	8.7t	8.7t	8.7t	8.7t	8.7t	8.7t	8.7t	8.7t	8.7t	8.7t	8.7t	

m	52.3	52.3	52.3	52.3	52.3	52.3	52.3	52.3	52.3	52.3	56.0	56.0	56.0	56.0	56.0	60.0	60.0	60.0	60.0	60.0						m
°	5	15	30	45	60	5	15	30	45	60	5	15	30	45	60	5	15	30	45	60						°
3.0																										3.0
3.5																										3.5
4.0																										4.0
4.5																										4.5
5.0																										5.0
6.0																										6.0
7.0																										7.0
8.0																										8.0
9.0																										9.0
10.0																										10.0
11.0	2.7					3.0																				11.0
12.0	2.7					3.0					2.6															12.0
14.0	2.7	2.7				3.0	3.0				2.6	2.6				1.9										14.0
16.0	2.7	2.7	2.7			3.0	3.0	3.0			2.6	2.6				1.9	1.9									16.0
18.0	2.7	2.7	2.7			3.0	3.0	3.0			2.6	2.6	2.6			1.9	1.9	1.9								18.0
20.0	2.7	2.7	2.7	2.7	2.6	3.0	3.0	3.0	2.9	2.6	2.6	2.6	2.6	2.6		1.9	1.9	1.9	1.9							20.0
22.0	2.7	2.7	2.7	2.7	2.5	3.0	3.0	3.0	2.8	2.5	2.6	2.6	2.6	2.6	2.5	1.9	1.9	1.9	1.9	1.9						22.0
24.0	2.7	2.7	2.7	2.7		3.0	3.0	3.0	2.7		2.6	2.6	2.6	2.6	2.5	1.9	1.9	1.9	1.9	1.9						24.0
26.0	2.7	2.7	2.7	2.6		3.0	3.0	3.0	2.7		2.6	2.6	2.6	2.6		1.9	1.9	1.9	1.9							26.0
28.0	2.7	2.7	2.7	2.6		3.0	3.0	2.9	2.6		2.6	2.6	2.6	2.6		1.9	1.9	1.9	1.9							28.0
30.0	2.7	2.7	2.7	2.5		3.0	3.0	2.8	2.5		2.6	2.6	2.6	2.5		1.9	1.9	1.9	1.9							30.0
32.0	2.7	2.7	2.7	2.5		3.0	3.0	2.7	2.5		2.6	2.6	2.6	2.5		1.9	1.9	1.9	1.9							32.0
34.0	2.7	2.7	2.6	2.4		3.0	3.0	2.6	2.5		2.6	2.6	2.6	2.4		1.9	1.9	1.9	1.9							34.0
36.0	2.7	2.6	2.5	2.4		3.0	2.9	2.6	2.4		2.6	2.6	2.5	2.4		1.9	1.9	1.9	1.9							36.0
38.0	2.5	2.5	2.4			3.0	2.8	2.5			2.5	2.4	2.4	2.3		1.9	1.9	1.9	1.9							38.0
40.0	2.4	2.3	2.3			2.8	2.7	2.5			2.4	2.3	2.2			1.9	1.9	1.9	1.9							40.0
42.0	2.3	2.2	2.2			2.7	2.6	2.4			2.3	2.2	2.1			1.9	1.9	1.9								42.0
44.0	2.1	2.1	2.0			2.2	2.4	2.4			2.2	2.1	2.0			1.9	1.9	1.9								44.0
46.0	2.0	2.0	1.9			1.8	1.9	2.1			1.9	2.0	1.9			1.8	1.8	1.8								46.0
48.0	1.9	1.8	1.8			1.4	1.5	1.7			1.5	1.7	1.8			1.4	1.6	1.7								48.0
50.0	1.6	1.7				1.0	1.2				1.2	1.3	1.5			1.1	1.2	1.4								50.0
52.0	1.3	1.4										1.0					0.9	1.1								52.0
54.0	1.0	1.1																								54.0
56.0																										56.0
58.0																										58.0
60.0																										60.0
64.0																										64.0
1	46	46	46	46	46	92	92	92	92	92	92	92	92	92	92	100	100	100	100	100						1
2	92	92	92	92	92	92	92	92	92	92	92	92	92	92	92	100	100	100	100	100						2
3	92	92	92	92	92	92	92	92	92	92	92	92	92	92	92	100	100	100	100	100						3
4	92	92	92	92	92	92	92	92	92	92	92	92	92	92	92	100	100	100	100	100						4
5	92	92	92	92	92	92	92	92	92	92	92	92	92	92	92	100	100	100	100	100						5
6	92	92	92	92	92	46	46	46	46	46	92	92	92	92	92	100	100	100	100	100						6
ID	28	28	28	28	28	39	39	39	39	39	29	29	29	29	29	19	19	19	19	19						ID
[DEG]	38~84.7	39~84.7	49~84.7	65~84.7	79~84.7	44~84.7	45~84.7	49~84.7	65~84.7	79~84.7	48~84.7	46~84.7	51~84.7	65~84.7	79~84.7	52~84.7	51~84.7	52~84.7	65~84.7	79~84.7						[DEG]
	1	1	1	1	1	1	1	1	1	1	1	1	1	1	1	1	1	1	1	1						
	8.7t	8.7t	8.7t	8.7t	8.7t	8.7t	8.7t	8.7t	8.7t	8.7t	8.7t	8.7t	8.7t	8.7t	8.7t	8.7t	8.7t	8.7t	8.7t	8.7t						

FLJ	1.6m + 17.4m	34.1 t	8.0m x 7.5m	360 °	JPN

m	11.4	11.4	11.4	11.4	11.4	15.1	15.1	15.1	15.1	15.1	15.1	15.1	15.1	15.1	15.1	15.1	15.1	15.1	15.1	15.1	18.8	18.8	18.8	18.8	18.8	m
°	5	15	30	45	60	5	15	30	45	60	5	15	30	45	60	5	15	30	45	60	5	15	30	45	60	°
3.0																										3.0
3.5																										3.5
4.0																										4.0
4.5	3.3																									4.5
5.0	3.3					3.1					3.3					3.3										5.0
6.0	3.3					3.1					3.3					3.3					2.7					6.0
7.0	3.3					3.1					3.3					3.3					2.7					7.0
8.0	3.3	3.3				3.1					3.3					3.3					2.7					8.0
9.0	3.3	3.3				3.1	3.1				3.3	3.3				3.3	3.3				2.7	2.7				9.0
10.0	3.3	3.2				3.1	3.1				3.3	3.3				3.3	3.3				2.7	2.7				10.0
11.0	3.3	3.0				3.1	3.1				3.3	3.1				3.3	3.1				2.7	2.7				11.0
12.0	3.2	2.9	2.5			3.1	2.9				3.3	2.9				3.3	3.0				2.7	2.7				12.0
14.0	2.9	2.6	2.3			3.1	2.7	2.3			3.1	2.7	2.3			3.1	2.7	2.3			2.7	2.7	2.3			14.0
16.0	2.6	2.4	2.1	1.8		2.8	2.5	2.2	1.9		2.8	2.5	2.2	1.9		2.8	2.5	2.2	1.9		2.7	2.5	2.2			16.0
18.0	2.4	2.2	1.9	1.7		2.6	2.3	2.0	1.8		2.6	2.3	2.0	1.8		2.6	2.3	2.0	1.8		2.7	2.4	2.0	1.8		18.0
20.0	2.2	2.0	1.8	1.6		2.4	2.1	1.9	1.7		2.4	2.1	1.9	1.7		2.4	2.1	1.9	1.7		2.5	2.2	1.9	1.7		20.0
22.0	2.0	1.9	1.7			2.2	2.0	1.8	1.6		2.2	2.0	1.8	1.6		2.2	2.0	1.8	1.6		2.3	2.1	1.8	1.6		22.0
24.0	1.8	1.7				2.1	1.9	1.7			2.1	1.9	1.7			2.1	1.9	1.7			2.2	2.0	1.8	1.6		24.0
26.0	1.7	1.6				1.9	1.8	1.6			1.9	1.8	1.6			1.9	1.8	1.6			2.0	1.9	1.7			26.0
28.0						1.8	1.6				1.8	1.6				1.8	1.6				1.9	1.8	1.6			28.0
30.0						1.6					1.6					1.6					1.9	1.7				30.0
32.0																					1.7	1.6				32.0
34.0																					1.6					34.0
36.0																										36.0
38.0																										38.0
40.0																										40.0
42.0																										42.0
44.0																										44.0
46.0																										46.0
48.0																										48.0
50.0																										50.0
52.0																										52.0
54.0																										54.0
56.0																										56.0
58.0																										58.0
60.0																										60.0
64.0																										64.0
1	0	0	0	0		0	0	0	0		0	0	0	0		0	0	0	0		0	0	0	0		1
2	0	0	0	0		0	0	0	0		0	0	0	0		46	46	46	46		0	0	0	0		2
3	0	0	0	0		0	0	0	0		46	46	46	46		0	0	0	0		0	0	0	0		3
4	0	0	0	0		46	46	46	46		0	0	0	0		0	0	0	0		0	0	0	0		4
5	0	0	0	0		0	0	0	0		0	0	0	0		0	0	0	0		46	46	46	46		5
6	0	0	0	0		0	0	0	0		0	0	0	0		0	0	0	0		46	46	46	46		6
ID	1	1	1	1		76	76	76	76		105	105	105	105		131	131	131	131		30	30	30	30		ID
[DEG]	0~84.7	0~84.7	0~84.7	0~84.7		23~84.7	36~84.7	47~84.7	63~84.7		23~84.7	36~84.7	47~84.7	63~84.7		23~84.7	36~84.7	47~84.7	63~84.7		21~84.7	33~84.7	49~84.7	63~84.7		[DEG]
	1	1	1	1		1	1	1	1		1	1	1	1		1	1	1	1		1	1	1	1		
	8.7t	8.7t	8.7t	8.7t		8.7t	8.7t	8.7t	8.7t		8.7t	8.7t	8.7t	8.7t		8.7t	8.7t	8.7t	8.7t		8.7t	8.7t	8.7t	8.7t		

m	18.8	18.8	18.8	18.8	18.8	18.8	18.8	18.8	18.8	18.8	18.8	18.8	18.8	18.8	18.8	22.6	22.6	22.6	22.6	22.6	26.3	26.3	26.3	26.3	26.3	m
°	5	15	30	45	60	5	15	30	45	60	5	15	30	45	60	5	15	30	45	60	5	15	30	45	60	°
3.0																										3.0
3.5																										3.5
4.0																										4.0
4.5																										4.5
5.0																										5.0
6.0	2.9					3.2					3.3					2.5										6.0
7.0	2.9					3.2					3.3					2.5					3.3					7.0
8.0	2.9					3.2					3.3					2.5					3.3					8.0
9.0	2.9	2.9				3.2	3.2				3.3	3.3				2.5					3.3					9.0
10.0	2.9	2.9				3.2	3.2				3.3	3.3				2.5	2.5				3.3	3.3				10.0
11.0	2.9	2.9				3.2	3.2				3.3	3.2				2.5	2.5				3.3	3.3				11.0
12.0	2.9	2.9				3.2	3.0				3.3	3.0				2.5	2.5				3.3	3.2				12.0
14.0	2.9	2.8	2.3			3.2	2.8	2.3			3.2	2.8	2.3			2.5	2.5	2.3			3.3	2.9	2.4			14.0
16.0	2.9	2.5	2.2	1.9		2.9	2.6	2.2	1.9		3.0	2.6	2.2	1.9		2.5	2.5	2.2			3.2	2.7	2.2			16.0
18.0	2.7	2.4	2.1	1.8		2.7	2.4	2.1	1.8		2.7	2.4	2.1	1.8		2.5	2.4	2.1	1.8		3.0	2.5	2.1	1.9		18.0
20.0	2.5	2.2	1.9	1.7		2.5	2.2	1.9	1.7		2.5	2.2	2.0	1.7		2.5	2.3	1.9	1.7		2.8	2.4	2.0	1.8		20.0
22.0	2.3	2.1	1.9	1.6		2.3	2.1	1.9	1.6		2.4	2.1	1.9	1.6		2.4	2.1	1.9	1.7		2.6	2.3	1.9	1.7		22.0
24.0	2.2	2.0	1.8	1.6		2.2	2.0	1.8	1.6		2.2	2.0	1.8	1.6		2.3	2.0	1.8	1.6		2.4	2.1	1.9	1.6		24.0
26.0	2.1	1.9	1.7			2.1	1.9	1.7			2.1	1.9	1.7			2.1	1.9	1.7	1.5		2.3	2.0	1.8	1.6		26.0
28.0	1.9	1.8	1.6			2.0	1.8	1.6			2.0	1.8	1.6			2.0	1.8	1.7			2.2	1.9	1.7	1.5		28.0
30.0	1.9	1.7				1.9	1.7				1.9	1.7				1.9	1.8	1.6			2.1	1.9	1.7			30.0
32.0	1.7	1.6				1.7	1.6				1.7	1.6				1.8	1.7				2.0	1.8	1.6			32.0
34.0	1.6					1.6					1.6					1.8	1.6				1.9	1.7	1.6			34.0
36.0																1.7					1.8	1.7				36.0
38.0																					1.7	1.6				38.0
40.0																					1.6					40.0
42.0																										42.0
44.0																										44.0
46.0																										46.0
48.0																										48.0
50.0																										50.0
52.0																										52.0
54.0																										54.0
56.0																										56.0
58.0																										58.0
60.0																										60.0
64.0																										64.0
1	0	0	0	0		0	0	0	0		0	0	0	0		0	0	0	0		92	92	92	92		1
2	0	0	0	0		0	0	0	0		46	46	46	46		0	0	0	0		92	92	92	92		2
3	0	0	0	0		46	46	46	46		46	46	46	46		0	0	0	0		0	0	0	0		3
4	46	46	46	46		46	46	46	46		0	0	0	0		0	0	0	0		0	0	0	0		4
5	46	46	46	46		0	0	0	0		0	0	0	0		46	46	46	46		0	0	0	0		5
6	0	0	0	0		0	0	0	0		0	0	0	0		92	92	92	92		0	0	0	0		6
ID	58	58	58	58		88	88	88	88		113	113	113	113		20	20	20	20		134	134	134	134		ID
[DEG]	21~84.7	32~84.7	49~84.7	63~84.7		21~84.7	32~84.7	49~84.7	63~84.7		21~84.7	32~84.7	49~84.7	63~84.7		28~84.7	37~84.7	51~84.7	63~84.7		26~84.7	34~84.7	47~84.7	62~84.7		[DEG]
	1	1	1	1		1	1	1	1		1	1	1	1		1	1	1	1		1	1	1	1		
	8.7t	8.7t	8.7t	8.7t		8.7t	8.7t	8.7t	8.7t		8.7t	8.7t	8.7t	8.7t		8.7t	8.7t	8.7t	8.7t		8.7t	8.7t	8.7t	8.7t		

フルオートラフィングジブ

FLJ	1.6m + 17.4m	34.1 t	8.0m x 7.5m	360 °	JPN

m	30.0	30.0	30.0	30.0	30.0	30.0	30.0	30.0	30.0	30.0	33.7	33.7	33.7	33.7	33.7	37.4	37.4	37.4	37.4	37.4	37.4	37.4	37.4	37.4	37.4	m
°	5	15	30	45	60	5	15	30	45	60	5	15	30	45	60	5	15	30	45	60	5	15	30	45	60	°
3.0																										3.0
3.5																										3.5
4.0																										4.0
4.5																										4.5
5.0																										5.0
6.0																										6.0
7.0																										7.0
8.0	2.3					3.2					3.1															8.0
9.0	2.3					3.2					3.1					2.4					2.5					9.0
10.0	2.3					3.2					3.1					2.4					2.5					10.0
11.0	2.3	2.3				3.2	3.2				3.1					2.4					2.5					11.0
12.0	2.3	2.3				3.2	3.2				3.1	3.1				2.4	2.4				2.5					12.0
14.0	2.3	2.3				3.2	2.9				3.1	3.0				2.4	2.4				2.5	2.5				14.0
16.0	2.3	2.3	2.2			3.2	2.8	2.3			3.1	2.8	2.3			2.4	2.4	2.2			2.5	2.5				16.0
18.0	2.3	2.3	2.1			3.1	2.6	2.2	1.9		3.1	2.6	2.2			2.4	2.4	2.2			2.5	2.5	2.1			18.0
20.0	2.3	2.3	2.0	1.8		2.9	2.4	2.1	1.8	1.5	2.9	2.5	2.1	1.8		2.4	2.4	2.1	1.8		2.5	2.4	2.0	1.8		20.0
22.0	2.3	2.2	1.9	1.7		2.7	2.3	2.0	1.7	1.5	2.7	2.3	2.0	1.8		2.4	2.4	2.0	1.8	1.5	2.5	2.2	1.9	1.7	1.5	22.0
24.0	2.3	2.1	1.8	1.7		2.5	2.2	1.9	1.7		2.6	2.2	1.9	1.7		2.4	2.2	1.9	1.7	1.5	2.5	2.1	1.8	1.7	1.5	24.0
26.0	2.3	2.0	1.8	1.6		2.4	2.1	1.8	1.6		2.4	2.1	1.8	1.6		2.4	2.2	1.8	1.7		2.4	2.1	1.8	1.6		26.0
28.0	2.2	1.9	1.7	1.6		2.3	2.0	1.8	1.6		2.3	2.0	1.8	1.6		2.4	2.1	1.8	1.6		2.2	2.0	1.7	1.6		28.0
30.0	2.1	1.8	1.6	1.5		2.2	1.9	1.7	1.5		2.2	1.9	1.7	1.5		2.3	2.0	1.7	1.6		2.1	1.9	1.7	1.5		30.0
32.0	2.0	1.8	1.6			2.1	1.8	1.6			2.1	1.9	1.7	1.5		2.2	1.9	1.7	1.5		2.1	1.8	1.6	1.5		32.0
34.0	1.9	1.7	1.6			2.0	1.8	1.6			2.0	1.8	1.6			2.1	1.8	1.6	1.5		2.0	1.8	1.6	1.5		34.0
36.0		1.7	1.5			1.9	1.7	1.6			1.9	1.8	1.6			2.0	1.8	1.6			1.9	1.7	1.5			36.0
38.0		1.6				1.8	1.7				1.9	1.7	1.6			1.9	1.7	1.6			1.8	1.7	1.5			38.0
40.0		1.6				1.8	1.6					1.7				1.9	1.7	1.5			1.8	1.6	1.5			40.0
42.0		1.5				1.7	1.6					1.6				1.8	1.6	1.5			1.7	1.6	1.4			42.0
44.0						1.6						1.6					1.6					1.5				44.0
46.0																	1.6					1.5				46.0
48.0																	1.5					1.5				48.0
50.0																										50.0
52.0																										52.0
54.0																										54.0
56.0																										56.0
58.0																										58.0
60.0																										60.0
64.0																										64.0
1	0	0	0	0		92	92	92	92	92	92	92	92	92		92	92	92	92	92	0	0	0	0	0	1
2	0	0	0	0		92	92	92	92	92	92	92	92	92		92	92	92	92	92	0	0	0	0	0	2
3	0	0	0	0		46	46	46	46	46	92	92	92	92		92	92	92	92	92	46	46	46	46	46	3
4	46	46	46	46		0	0	0	0	0	0	0	0	0		46	46	46	46	46	92	92	92	92	92	4
5	92	92	92	92		0	0	0	0	0	0	0	0	0		0	0	0	0	0	92	92	92	92	92	5
6	92	92	92	92		0	0	0	0	0	0	0	0	0		0	0	0	0	0	92	92	92	92	92	6
ID	22	22	22	22		116	116	116	116	116	110	110	110	110		93	93	93	93	93	24	24	24	24	24	ID
[DEG]	48~84.7	33~84.7	49~84.7	63~84.7		24~84.7	32~84.7	49~84.7	62~84.7	77~84.7	45~84.7	36~84.7	50~84.7	62~84.7		44~84.7	35~84.7	48~84.7	62~84.7	77~84.7	44~84.7	35~84.7	48~84.7	63~84.7	78~84.7	[DEG]
	1	1	1	1		1	1	1	1	1	1	1	1	1		1	1	1	1	1	1	1	1	1	1	
	8.7t	8.7t	8.7t	8.7t		8.7t	8.7t	8.7t	8.7t	8.7t	8.7t	8.7t	8.7t	8.7t		8.7t	8.7t	8.7t	8.7t	8.7t	8.7t	8.7t	8.7t	8.7t	8.7t	

m	41.2	41.2	41.2	41.2	41.2	44.9	44.9	44.9	44.9	44.9	44.9	44.9	44.9	44.9	44.9	48.6	48.6	48.6	48.6	48.6	48.6	48.6	48.6	48.6	48.6	m
°	5	15	30	45	60	5	15	30	45	60	5	15	30	45	60	5	15	30	45	60	5	15	30	45	60	°
3.0																										3.0
3.5																										3.5
4.0																										4.0
4.5																										4.5
5.0																										5.0
6.0																										6.0
7.0																										7.0
8.0																										8.0
9.0																										9.0
10.0	2.7										2.4															10.0
11.0	2.7					1.9					2.4					2.0					2.2					11.0
12.0	2.7					1.9					2.4					2.0					2.2					12.0
14.0	2.7	2.7				1.9	1.9				2.4	2.4				2.0	2.0				2.2	2.2				14.0
16.0	2.7	2.7				1.9	1.9				2.4	2.4				2.0	2.0				2.2	2.2				16.0
18.0	2.7	2.6	2.1			1.9	1.9	1.9			2.4	2.4	2.1			2.0	2.0				2.2	2.2				18.0
20.0	2.7	2.5	2.1	1.8		1.9	1.9	1.9			2.4	2.4	2.0			2.0	2.0	2.0			2.2	2.2	2.0			20.0
22.0	2.7	2.4	2.0	1.8	1.5	1.9	1.9	1.9	1.7		2.4	2.4	2.0	1.7		2.0	2.0	1.9	1.7		2.2	2.2	1.9	1.7		22.0
24.0	2.6	2.3	1.9	1.7	1.5	1.9	1.9	1.8	1.7	1.5	2.4	2.2	1.9	1.7	1.5	2.0	2.0	1.9	1.7	1.5	2.2	2.2	1.9	1.7	1.5	24.0
26.0	2.5	2.2	1.8	1.7		1.9	1.9	1.8	1.6	1.5	2.4	2.2	1.8	1.7	1.5	2.0	2.0	1.8	1.6	1.5	2.2	2.1	1.8	1.6	1.5	26.0
28.0	2.4	2.1	1.8	1.6		1.9	1.9	1.7	1.6		2.4	2.1	1.8	1.6		2.0	2.0	1.7	1.6		2.2	2.1	1.8	1.6		28.0
30.0	2.3	2.0	1.7	1.6		1.9	1.9	1.7	1.5		2.3	2.0	1.7	1.6		2.0	2.0	1.7	1.6		2.2	2.0	1.7	1.6		30.0
32.0	2.2	1.9	1.7	1.6		1.9	1.9	1.6	1.5		2.2	1.9	1.7	1.5		2.0	1.9	1.6	1.5		2.2	1.9	1.7	1.5		32.0
34.0	2.1	1.9	1.6	1.5		1.9	1.8	1.6	1.5		2.1	1.9	1.6	1.5		2.0	1.8	1.6	1.5		2.1	1.9	1.6	1.5		34.0
36.0	2.0	1.8	1.6	1.5		1.9	1.7	1.5	1.5		2.0	1.8	1.6	1.5		2.0	1.8	1.6	1.5		2.0	1.8	1.6	1.5		36.0
38.0	1.9	1.7	1.6			1.9	1.7	1.5			2.0	1.7	1.5			1.9	1.7	1.5	1.4		2.0	1.7	1.5	1.4		38.0
40.0	1.9	1.7	1.5			1.8	1.6	1.5			1.9	1.7	1.5			1.9	1.7	1.5			1.9	1.7	1.5			40.0
42.0	1.8	1.6	1.5			1.8	1.6	1.4			1.8	1.6	1.5			1.8	1.6	1.5			1.8	1.6	1.5			42.0
44.0	1.8	1.6	1.5			1.7	1.6	1.4			1.8	1.6	1.5			1.8	1.6	1.4			1.8	1.6	1.4			44.0
46.0	1.7	1.6				1.7	1.5	1.4			1.7	1.6	1.4			1.7	1.5	1.4			1.7	1.6	1.4			46.0
48.0		1.5				1.6	1.5				1.7	1.5				1.7	1.5	1.4			1.7	1.5	1.4			48.0
50.0		1.4				1.6	1.5				1.3	1.5				1.6	1.5	1.4			1.4	1.5	1.4			50.0
52.0							1.4					1.2				1.6	1.5				1.1	1.3				52.0
54.0							1.3										1.4					0.9				54.0
56.0																	1.2									56.0
58.0																	0.9									58.0
60.0																										60.0
64.0																										64.0
1	92	92	92	92	92	0	0	0	0	0	92	92	92	92	92	46	46	46	46	46	92	92	92	92	92	1
2	92	92	92	92	92	46	46	46	46	46	92	92	92	92	92	92	92	92	92	92	92	92	92	92	92	2
3	92	92	92	92	92	92	92	92	92	92	92	92	92	92	92	92	92	92	92	92	92	92	92	92	92	3
4	92	92	92	92	92	92	92	92	92	92	92	92	92	92	92	92	92	92	92	92	92	92	92	92	92	4
5	0	0	0	0	0	92	92	92	92	92	46	46	46	46	46	92	92	92	92	92	92	92	92	92	92	5
6	0	0	0	0	0	92	92	92	92	92	0	0	0	0	0	46	46	46	46	46	0	0	0	0	0	6
ID	83	83	83	83	83	26	26	26	26	26	65	65	65	65	65	38	38	38	38	38	49	49	49	49	49	ID
[DEG]	43~84.7	37~84.7	50~84.7	62~84.7	79~84.7	42~84.7	36~84.7	51~84.7	65~84.7	78~84.7	41~84.7	40~84.7	51~84.7	65~84.7	78~84.7	44~84.7	35~84.7	49~84.7	65~84.7	79~84.7	43~84.7	42~84.7	49~84.7	65~84.7	79~84.7	[DEG]
	1	1	1	1	1	1	1	1	1	1	1	1	1	1	1	1	1	1	1	1	1	1	1	1	1	
	8.7t	8.7t	8.7t	8.7t	8.7t	8.7t	8.7t	8.7t	8.7t	8.7t	8.7t	8.7t	8.7t	8.7t	8.7t	8.7t	8.7t	8.7t	8.7t	8.7t	8.7t	8.7t	8.7t	8.7t	8.7t	

FLJ	1.6m + 17.4m	34.1 t	8.0m x 7.5m	360 °	JPN

m	52.3	52.3	52.3	52.3	52.3	52.3	52.3	52.3	52.3	52.3	56.0	56.0	56.0	56.0	56.0	60.0	60.0	60.0	60.0	60.0						m
°	5	15	30	45	60	5	15	30	45	60	5	15	30	45	60	5	15	30	45	60						°
3.0																										3.0
3.5																										3.5
4.0																										4.0
4.5																										4.5
5.0																										5.0
6.0																										6.0
7.0																										7.0
8.0																										8.0
9.0																										9.0
10.0																										10.0
11.0																										11.0
12.0						2.0																				12.0
14.0	1.8					2.0					1.8															14.0
16.0	1.8	1.8				2.0	2.0				1.8	1.8				1.0										16.0
18.0	1.8	1.8				2.0	2.0				1.8	1.8				1.0	1.0									18.0
20.0	1.8	1.8	1.8			2.0	2.0	2.0			1.8	1.8				1.0	1.0									20.0
22.0	1.8	1.8	1.8			2.0	2.0	1.9			1.8	1.8	1.8			1.0	1.0	1.0								22.0
24.0	1.8	1.8	1.8	1.6		2.0	2.0	1.9	1.7		1.8	1.8	1.8	1.6		1.0	1.0	1.0								24.0
26.0	1.8	1.8	1.8	1.6	1.5	2.0	2.0	1.8	1.6	1.5	1.8	1.8	1.8	1.6	1.5	1.0	1.0	1.0	1.0							26.0
28.0	1.8	1.8	1.7	1.6	1.4	2.0	2.0	1.7	1.6	1.4	1.8	1.8	1.7	1.6	1.4	1.0	1.0	1.0	1.0	1.0						28.0
30.0	1.8	1.8	1.7	1.5		2.0	2.0	1.7	1.5		1.8	1.8	1.7	1.5		1.0	1.0	1.0	1.0	1.0						30.0
32.0	1.8	1.8	1.6	1.5		2.0	1.9	1.6	1.5		1.8	1.8	1.6	1.5		1.0	1.0	1.0	1.0							32.0
34.0	1.8	1.8	1.6	1.5		2.0	1.8	1.6	1.5		1.8	1.8	1.6	1.5		1.0	1.0	1.0	1.0							34.0
36.0	1.8	1.8	1.5	1.4		2.0	1.8	1.6	1.5		1.8	1.8	1.5	1.4		1.0	1.0	1.0	1.0							36.0
38.0	1.8	1.7	1.5	1.4		2.0	1.7	1.5	1.4		1.8	1.7	1.5	1.4		1.0	1.0	1.0	1.0							38.0
40.0	1.8	1.7	1.5	1.4		1.9	1.7	1.5	1.4		1.8	1.7	1.5	1.4		1.0	1.0	1.0	1.0							40.0
42.0	1.8	1.6	1.4			1.8	1.6	1.5			1.8	1.6	1.4	1.4		1.0	1.0	1.0	1.0							42.0
44.0	1.8	1.6	1.4			1.8	1.6	1.4			1.8	1.6	1.4			1.0	1.0	1.0	1.0							44.0
46.0	1.7	1.5	1.4			1.7	1.6	1.4			1.7	1.5	1.4			1.0	1.0	1.0								46.0
48.0	1.7	1.5	1.4			1.7	1.5	1.4			1.7	1.5	1.4			1.0	1.0	1.0								48.0
50.0	1.6	1.5	1.3			1.5	1.5	1.4			1.6	1.5	1.3			1.0	1.0	1.0								50.0
52.0	1.6	1.4	1.3			1.2	1.4	1.3			1.3	1.4	1.3			1.0	1.0	1.0								52.0
54.0	1.4	1.4				0.9	1.1				1.0	1.2	1.3			0.9	1.0	1.0								54.0
56.0	1.1	1.3										0.9						1.0								56.0
58.0		1.0																								58.0
60.0																										60.0
64.0																										64.0
1	46	46	46	46	46	92	92	92	92	92	92	92	92	92	92	100	100	100	100	100						1
2	92	92	92	92	92	92	92	92	92	92	92	92	92	92	92	100	100	100	100	100						2
3	92	92	92	92	92	92	92	92	92	92	92	92	92	92	92	100	100	100	100	100						3
4	92	92	92	92	92	92	92	92	92	92	92	92	92	92	92	100	100	100	100	100						4
5	92	92	92	92	92	92	92	92	92	92	92	92	92	92	92	100	100	100	100	100						5
6	92	92	92	92	92	46	46	46	46	46	92	92	92	92	92	100	100	100	100	100						6
ID	28	28	28	28	28	39	39	39	39	39	29	29	29	29	29	19	19	19	19	19						ID
[DEG]	42~84.7	41~84.7	51~84.7	65~84.7	78~84.7	44~84.7	46~84.7	51~84.7	65~84.7	78~84.7	48~84.7	48~84.7	52~84.7	66~84.7	79~84.7	52~84.7	54~84.7	53~84.7	66~84.7	78~84.7						[DEG]
	1	1	1	1	1	1	1	1	1	1	1	1	1	1	1	1	1	1	1	1						
	8.7t	8.7t	8.7t	8.7t	8.7t	8.7t	8.7t	8.7t	8.7t	8.7t	8.7t	8.7t	8.7t	8.7t	8.7t	8.7t	8.7t	8.7t	8.7t	8.7t						

FLJ	1.6m + 7.4m	34.1 t	8.0m x 6.2m	360 °	JPN

m	11.4	11.4	11.4	11.4	11.4	15.1	15.1	15.1	15.1	15.1	15.1	15.1	15.1	15.1	15.1	15.1	15.1	15.1	15.1	15.1	18.8	18.8	18.8	18.8	18.8	m
°	5	15	30	45	60	5	15	30	45	60	5	15	30	45	60	5	15	30	45	60	5	15	30	45	60	°
3.0	7.3					7.3					7.3					7.3					7.3					3.0
3.5	7.3					7.3					7.3					7.3					7.3					3.5
4.0	7.3	7.3				7.3	7.3				7.3	7.3				7.3	7.3				7.3					4.0
4.5	7.3	7.3				7.3	7.3				7.3	7.3				7.3	7.3				7.3					4.5
5.0	7.3	7.3	7.3			7.3	7.3				7.3	7.3				7.3	7.3				7.3	7.3				5.0
6.0	7.3	7.3	7.3			7.3	7.3	7.3			7.3	7.3	7.3			7.3	7.3	7.3			7.3	7.3	7.3			6.0
7.0	7.3	7.3	7.3	6.5	5.0	7.3	7.3	7.3	6.7		7.3	7.3	7.3	6.7		7.3	7.3	7.3	6.7		7.3	7.3	7.3			7.0
8.0	7.3	7.3	7.3	6.3	4.9	7.3	7.3	7.3	6.5	5.0	7.3	7.3	7.3	6.5	5.0	7.3	7.3	7.3	6.5	5.0	7.3	7.3	7.3	6.6	5.0	8.0
9.0	7.3	7.3	7.2	6.0		7.3	7.3	7.3	6.3	4.9	7.3	7.3	7.3	6.3	4.9	7.3	7.3	7.3	6.3	4.9	7.3	7.3	7.3	6.4	4.9	9.0
10.0	7.3	7.3	6.9	5.9		7.3	7.3	7.3	6.1		7.3	7.3	7.3	6.1		7.3	7.3	7.3	6.1		7.3	7.3	7.3	6.3	4.9	10.0
11.0	7.3	7.3	6.6	5.7		7.3	7.3	7.0	5.9		7.3	7.3	7.0	5.9		7.3	7.3	7.0	5.9		7.3	7.3	7.3	6.1		11.0
12.0	7.3	7.0	6.3			7.3	7.3	6.8	5.8		7.3	7.3	6.8	5.8		7.3	7.3	6.8	5.8		7.3	7.3	7.2	6.0		12.0
14.0	6.4	6.2	5.9			7.3	7.1	6.3			7.3	7.1	6.3			7.3	7.1	6.3			7.3	7.3	6.7	5.7		14.0
16.0	5.7	5.7				6.8	6.4	5.9			6.8	6.4	5.9			6.8	6.4	5.9			7.3	7.1	6.3			16.0
18.0						6.0	5.9				6.0	5.9				6.0	5.9				7.0	6.6	6.0			18.0
20.0						5.5					5.5					5.5					6.3	6.1				20.0
22.0																					5.8	5.7				22.0
24.0																					5.3					24.0
26.0																										26.0
28.0																										28.0
30.0																										30.0
32.0																										32.0
34.0																										34.0
36.0																										36.0
38.0																										38.0
40.0																										40.0
42.0																										42.0
44.0																										44.0
46.0																										46.0
48.0																										48.0
50.0																										50.0
52.0																										52.0
54.0																										54.0
56.0																										56.0
58.0																										58.0
60.0																										60.0
64.0																										64.0
1	0	0	0	0	0	0	0	0	0	0	0	0	0	0	0	0	0	0	0	0	0	0	0	0	0	1
2	0	0	0	0	0	0	0	0	0	0	0	0	0	0	0	46	46	46	46	46	0	0	0	0	0	2
3	0	0	0	0	0	0	0	0	0	0	46	46	46	46	46	0	0	0	0	0	0	0	0	0	0	3
4	0	0	0	0	0	46	46	46	46	46	0	0	0	0	0	0	0	0	0	0	0	0	0	0	0	4
5	0	0	0	0	0	0	0	0	0	0	0	0	0	0	0	0	0	0	0	0	46	46	46	46	46	5
6	0	0	0	0	0	0	0	0	0	0	0	0	0	0	0	0	0	0	0	0	46	46	46	46	46	6
ID	1	1	1	1	1	76	76	76	76	76	105	105	105	105	105	131	131	131	131	131	30	30	30	30	30	ID
[DEG]	0~84.7	0~84.7	0~84.7	0~84.7	0~84.7	24~84.7	37~84.7	48~84.7	64~84.7	75~84.7	24~84.7	37~84.7	48~84.7	64~84.7	75~84.7	24~84.7	37~84.7	48~84.7	64~84.7	75~84.7	22~84.7	34~84.7	50~84.7	63~84.7	75~84.7	[DEG]
	1	1	1	1	1	1	1	1	1	1	1	1	1	1	1	1	1	1	1	1	1	1	1	1	1	
	8.7t	8.7t	8.7t	8.7t	8.7t	8.7t	8.7t	8.7t	8.7t	8.7t	8.7t	8.7t	8.7t	8.7t	8.7t	8.7t	8.7t	8.7t	8.7t	8.7t	8.7t	8.7t	8.7t	8.7t	8.7t	

フルオートラフィングジブ

FLJ	1.6m + 7.4m	34.1 t	8.0m x 6.2m	360 °	JPN

m	18.8	18.8	18.8	18.8	18.8	18.8	18.8	18.8	18.8	18.8	18.8	18.8	18.8	18.8	18.8	22.6	22.6	22.6	22.6	22.6	26.3	26.3	26.3	26.3	26.3	m
°	5	15	30	45	60	5	15	30	45	60	5	15	30	45	60	5	15	30	45	60	5	15	30	45	60	°
3.0	7.3					7.3					7.3															3.0
3.5	7.3					7.3					7.3															3.5
4.0	7.3					7.3	7.3				7.3	7.3				7.3										4.0
4.5	7.3					7.3	7.3				7.3	7.3				7.3										4.5
5.0	7.3	7.3				7.3	7.3				7.3	7.3				7.3	7.3				7.3					5.0
6.0	7.3	7.3	7.3			7.3	7.3	7.3			7.3	7.3	7.3			7.3	7.3				7.3	7.3				6.0
7.0	7.3	7.3	7.3	6.9		7.3	7.3	7.3	6.9		7.3	7.3	7.3	6.9		7.3	7.3	7.3			7.3	7.3				7.0
8.0	7.3	7.3	7.3	6.6	5.0	7.3	7.3	7.3	6.6	5.0	7.3	7.3	7.3	6.6	5.0	7.3	7.3	7.3	6.8		7.3	7.3	7.3			8.0
9.0	7.3	7.3	7.3	6.4	4.9	7.3	7.3	7.3	6.4	4.9	7.3	7.3	7.3	6.4	4.9	7.3	7.3	7.3	6.6	5.0	7.3	7.3	7.3	6.7	5.0	9.0
10.0	7.3	7.3	7.3	6.3	4.9	7.3	7.3	7.3	6.3	4.9	7.3	7.3	7.3	6.3	4.9	7.3	7.3	7.3	6.4	4.9	7.3	7.3	7.3	6.5	4.9	10.0
11.0	7.3	7.3	7.3	6.1		7.3	7.3	7.3	6.1		7.3	7.3	7.3	6.1		7.3	7.3	7.3	6.3	4.8	7.3	7.3	7.3	6.4	4.9	11.0
12.0	7.3	7.3	7.2	6.0		7.3	7.3	7.2	6.0		7.3	7.3	7.2	6.0		7.3	7.3	7.3	6.1		7.3	7.3	7.3	6.3	4.8	12.0
14.0	7.3	7.3	6.7	5.7		7.3	7.3	6.7	5.7		7.3	7.3	6.7	5.7		7.2	6.9	6.5	5.9		7.3	7.3	7.3	6.0		14.0
16.0	7.3	7.1	6.3			7.3	7.1	6.3			7.3	7.1	6.3			6.4	6.1	5.9	5.7		7.3	7.3	7.0	5.8		16.0
18.0	7.0	6.6	6.0			7.0	6.6	6.0			7.0	6.6	6.0			5.7	5.5	5.3			7.3	7.3	6.6	5.7		18.0
20.0	6.3	6.1				6.3	6.1				6.3	6.1				5.1	5.0	4.9			7.3	7.2	6.3			20.0
22.0	5.8	5.7				5.8	5.7				5.8	5.7				4.6	4.5	4.5			7.3	6.8	6.1			22.0
24.0	5.3					5.3					5.3					4.2	4.1				6.8	6.4	5.9			24.0
26.0																3.8	3.8				5.7	5.8				26.0
28.0																					4.7	4.8				28.0
30.0																					3.9					30.0
32.0																										32.0
34.0																										34.0
36.0																										36.0
38.0																										38.0
40.0																										40.0
42.0																										42.0
44.0																										44.0
46.0																										46.0
48.0																										48.0
50.0																										50.0
52.0																										52.0
54.0																										54.0
56.0																										56.0
58.0																										58.0
60.0																										60.0
64.0																										64.0
1	0	0	0	0	0	0	0	0	0	0	0	0	0	0	0	0	0	0	0	0	92	92	92	92	92	1
2	0	0	0	0	0	0	0	0	0	0	46	46	46	46	46	0	0	0	0	0	92	92	92	92	92	2
3	0	0	0	0	0	46	46	46	46	46	46	46	46	46	46	0	0	0	0	0	0	0	0	0	0	3
4	46	46	46	46	46	46	46	46	46	46	0	0	0	0	0	0	0	0	0	0	0	0	0	0	0	4
5	46	46	46	46	46	0	0	0	0	0	0	0	0	0	0	46	46	46	46	46	0	0	0	0	0	5
6	0	0	0	0	0	0	0	0	0	0	0	0	0	0	0	92	92	92	92	92	0	0	0	0	0	6
ID	58	58	58	58	58	88	88	88	88	88	113	113	113	113	113	20	20	20	20	20	134	134	134	134	134	ID
[DEG]	21~84.7	33~84.7	50~84.7	63~84.7	75~84.7	21~84.7	33~84.7	50~84.7	63~84.7	75~84.7	21~84.7	33~84.7	50~84.7	63~84.7	75~84.7	29~84.7	30~84.7	46~84.7	63~84.7	76~84.7	26~84.7	35~84.7	48~84.7	63~84.7	76~84.7	[DEG]
	1	1	1	1	1	1	1	1	1	1	1	1	1	1	1	1	1	1	1	1	1	1	1	1	1	
	8.7t	8.7t	8.7t	8.7t	8.7t	8.7t	8.7t	8.7t	8.7t	8.7t	8.7t	8.7t	8.7t	8.7t	8.7t	8.7t	8.7t	8.7t	8.7t	8.7t	8.7t	8.7t	8.7t	8.7t	8.7t	

m	30.0	30.0	30.0	30.0	30.0	30.0	30.0	30.0	30.0	30.0	33.7	33.7	33.7	33.7	33.7	37.4	37.4	37.4	37.4	37.4	37.4	37.4	37.4	37.4	37.4	m
°	5	15	30	45	60	5	15	30	45	60	5	15	30	45	60	5	15	30	45	60	5	15	30	45	60	°
3.0																										3.0
3.5																										3.5
4.0																										4.0
4.5																										4.5
5.0	7.3					7.3																				5.0
6.0	7.3	7.3				7.3	7.3				7.3															6.0
7.0	7.3	7.3				7.3	7.3				7.3	7.3				7.1					7.3					7.0
8.0	7.3	7.3	7.3			7.3	7.3	7.3			7.3	7.3				7.1	7.1				7.3	7.3				8.0
9.0	7.3	7.3	7.3			7.3	7.3	7.3	6.8		7.3	7.3	7.3			7.1	7.1				7.3	7.3				9.0
10.0	7.3	7.3	7.3	6.6	5.0	7.3	7.3	7.3	6.6	5.0	7.3	7.3	7.3	6.7		7.1	7.1	7.1			7.3	7.3	7.3			10.0
11.0	7.3	7.3	7.3	6.5	4.9	7.3	7.3	7.3	6.5	4.9	7.3	7.3	7.3	6.6	4.9	7.1	7.1	7.1	6.7	5.0	7.3	7.3	7.2	6.7		11.0
12.0	7.3	7.3	7.1	6.4	4.9	7.3	7.3	7.3	6.4	4.9	7.3	7.3	7.3	6.5	4.9	7.1	7.1	7.1	6.6	4.9	7.3	7.3	6.9	6.4	4.9	12.0
14.0	6.8	6.6	6.3	6.1		7.3	7.3	7.3	6.1		7.3	7.3	7.3	6.2	4.8	7.1	7.1	7.1	6.3	4.8	6.9	6.6	6.2	5.9	4.8	14.0
16.0	6.0	5.8	5.6	5.5		7.3	7.3	7.2	5.9		7.3	7.3	7.3	6.0		7.1	7.1	7.1	6.1		6.1	5.9	5.7	5.5		16.0
18.0	5.3	5.2	5.1	5.0		7.3	7.3	6.9	5.8		7.3	7.3	7.1	5.9		7.1	7.1	7.1	6.0		5.5	5.4	5.2	5.0		18.0
20.0	4.8	4.7	4.6	4.5		7.3	7.3	6.6	5.6		7.3	7.3	6.8	5.7		7.1	7.1	7.1	5.8		5.0	4.9	4.7	4.6		20.0
22.0	4.3	4.3	4.2			7.3	7.3	6.3			7.3	7.3	6.5	5.6		7.1	7.1	6.8	5.7		4.6	4.5	4.3	4.3		22.0
24.0	3.9	3.9	3.8			6.8	6.8	6.1			6.8	7.0	6.3			6.9	7.1	6.5	5.6		4.2	4.1	4.0	4.0		24.0
26.0	3.5	3.5	3.5			5.7	5.8	5.9			5.6	5.9	6.1			5.8	6.0	6.2			3.9	3.8	3.7			26.0
28.0	3.2	3.1				4.7	4.8				4.7	4.9	5.0			4.8	5.0	5.2			3.6	3.5	3.5			28.0
30.0	2.8	2.8				3.9	4.0				3.8	4.0	4.2			4.0	4.1	4.3			3.4	3.3	3.2			30.0
32.0	2.5	2.5				3.1	3.2				3.1	3.2				3.2	3.4	3.5			3.1	3.1	3.0			32.0
34.0	2.2					2.5					2.4	2.6				2.6	2.7				2.8	2.8				34.0
36.0											1.9					2.0	2.1				2.6	2.6				36.0
38.0											1.3					1.5	1.5				2.4	2.3				38.0
40.0																1.0					2.2					40.0
42.0																										42.0
44.0																										44.0
46.0																										46.0
48.0																										48.0
50.0																										50.0
52.0																										52.0
54.0																										54.0
56.0																										56.0
58.0																										58.0
60.0																										60.0
64.0																										64.0
1	0	0	0	0	0	92	92	92	92	92	92	92	92	92	92	92	92	92	92	92	0	0	0	0	0	1
2	0	0	0	0	0	92	92	92	92	92	92	92	92	92	92	92	92	92	92	92	0	0	0	0	0	2
3	0	0	0	0	0	46	46	46	46	46	92	92	92	92	92	92	92	92	92	92	46	46	46	46	46	3
4	46	46	46	46	46	0	0	0	0	0	0	0	0	0	0	46	46	46	46	46	92	92	92	92	92	4
5	92	92	92	92	92	0	0	0	0	0	0	0	0	0	0	0	0	0	0	0	92	92	92	92	92	5
6	92	92	92	92	92	0	0	0	0	0	0	0	0	0	0	0	0	0	0	0	92	92	92	92	92	6
ID	22	22	22	22	22	116	116	116	116	116	110	110	110	110	110	93	93	93	93	93	24	24	24	24	24	ID
[DEG]	24~84.7	32~84.7	50~84.7	63~84.7	78~84.7	24~84.7	32~84.7	50~84.7	63~84.7	78~84.7	22~84.7	36~84.7	47~84.7	63~84.7	76~84.7	27~84.7	34~84.7	48~84.7	63~84.7	78~84.7	28~84.7	35~84.7	49~84.7	63~84.7	78~84.7	[DEG]
	1	1	1	1	1	1	1	1	1	1	1	1	1	1	1	1	1	1	1	1	1	1	1	1	1	
	8.7t	8.7t	8.7t	8.7t	8.7t	8.7t	8.7t	8.7t	8.7t	8.7t	8.7t	8.7t	8.7t	8.7t	8.7t	8.7t	8.7t	8.7t	8.7t	8.7t	8.7t	8.7t	8.7t	8.7t	8.7t	

FLJ	1.6m + 7.4m	34.1 t	8.0m x 6.2m	360 °	JPN

m	41.2	41.2	41.2	41.2	41.2	44.9	44.9	44.9	44.9	44.9	44.9	44.9	44.9	44.9	44.9	48.6	48.6	48.6	48.6	48.6	48.6	48.6	48.6	48.6	48.6	m
°	5	15	30	45	60	5	15	30	45	60	5	15	30	45	60	5	15	30	45	60	5	15	30	45	60	°
3.0																										3.0
3.5																										3.5
4.0																										4.0
4.5																										4.5
5.0																										5.0
6.0																										6.0
7.0	7.3																									7.0
8.0	7.3										6.5															8.0
9.0	7.3	7.3				4.6					6.5					4.8					5.4					9.0
10.0	7.3	7.3	7.3			4.6	4.6				6.5	6.5				4.8					5.4					10.0
11.0	7.3	7.3	7.3			4.6	4.6				6.5	6.5	6.5			4.8	4.8				5.4	5.4				11.0
12.0	7.3	7.3	7.3	6.6	4.9	4.6	4.6	4.6			6.5	6.5	6.5			4.8	4.8	4.8			5.4	5.4	5.4			12.0
14.0	7.3	7.3	7.3	6.4	4.9	4.6	4.6	4.6	4.6	4.6	6.5	6.5	6.5	6.5	4.9	4.8	4.8	4.8	4.8	4.8	5.4	5.4	5.4	5.4	4.9	14.0
16.0	7.3	7.3	7.3	6.2		4.6	4.6	4.6	4.6	4.6	6.5	6.5	6.5	6.3	4.8	4.8	4.8	4.8	4.8	4.8	5.4	5.4	5.4	5.4	4.8	16.0
18.0	7.3	7.3	7.2	6.1		4.6	4.6	4.6	4.6		6.5	6.5	6.5	6.1		4.8	4.8	4.8	4.8		5.4	5.4	5.4	5.4		18.0
20.0	7.3	7.3	7.1	5.9		4.6	4.6	4.6	4.6		6.5	6.5	6.5	6.0		4.8	4.8	4.8	4.8		5.4	5.4	5.4	5.4		20.0
22.0	7.3	7.3	6.8	5.8		4.6	4.5	4.3	4.2		6.5	6.5	6.5	5.9		4.8	4.8	4.8	4.7		5.4	5.4	5.4	5.4		22.0
24.0	6.7	6.7	6.6	5.7		4.3	4.2	4.0	4.0		6.3	6.3	6.4	5.8		4.8	4.8	4.6	4.5		5.4	5.4	5.4	5.4		24.0
26.0	5.8	6.1	6.2	5.6		4.0	3.9	3.8	3.7		5.8	5.8	5.9	5.7		4.7	4.5	4.3	4.2		5.4	5.4	5.3	5.3		26.0
28.0	4.9	5.1	5.3			3.7	3.6	3.5	3.5		5.0	5.2	5.4	5.5		4.4	4.2	4.1	4.0		5.0	5.0	5.0	5.0		28.0
30.0	4.0	4.2	4.4			3.5	3.4	3.3			4.2	4.4	4.6			4.1	4.0	3.9	3.8		4.3	4.5	4.7	4.7		30.0
32.0	3.3	3.5	3.7			3.3	3.2	3.1			3.5	3.6	3.8			3.9	3.8	3.7			3.6	3.8	4.0			32.0
34.0	2.7	2.8	3.0			3.1	3.0	3.0			2.8	3.0	3.2			3.5	3.6	3.5			3.0	3.1	3.3			34.0
36.0	2.1	2.2				2.9	2.9	2.8			2.2	2.4	2.5			3.0	3.1	3.2			2.4	2.5	2.7			36.0
38.0	1.5	1.7				2.7	2.7				1.7	1.8				2.4	2.6	2.7			1.9	2.0	2.1			38.0
40.0	1.1	1.2				2.5	2.5				1.3	1.4				2.0	2.1	2.2			1.4	1.5	1.6			40.0
42.0						2.3	2.3					0.9				1.6	1.7				1.0	1.1				42.0
44.0						1.9	2.0									1.2	1.3									44.0
46.0						1.6											0.9									46.0
48.0						1.3																				48.0
50.0																										50.0
52.0																										52.0
54.0																										54.0
56.0																										56.0
58.0																										58.0
60.0																										60.0
64.0																										64.0
1	92	92	92	92	92	0	0	0	0	0	92	92	92	92	92	46	46	46	46	46	92	92	92	92	92	1
2	92	92	92	92	92	46	46	46	46	46	92	92	92	92	92	92	92	92	92	92	92	92	92	92	92	2
3	92	92	92	92	92	92	92	92	92	92	92	92	92	92	92	92	92	92	92	92	92	92	92	92	92	3
4	92	92	92	92	92	92	92	92	92	92	92	92	92	92	92	92	92	92	92	92	92	92	92	92	92	4
5	0	0	0	0	0	92	92	92	92	92	46	46	46	46	46	92	92	92	92	92	92	92	92	92	92	5
6	0	0	0	0	0	92	92	92	92	92	0	0	0	0	0	46	46	46	46	46	0	0	0	0	0	6
ID	83	83	83	83	83	26	26	26	26	26	65	65	65	65	65	38	38	38	38	38	49	49	49	49	49	ID
[DEG]	36~84.7	37~84.7	50~84.7	63~84.7	79~84.7	25~84.7	36~84.7	51~84.7	63~84.7	78~84.7	42~84.7	39~84.7	51~84.7	64~84.7	78~84.7	41~84.7	38~84.7	49~84.7	63~84.7	79~84.7	44~84.7	45~84.7	49~84.7	64~84.7	79~84.7	[DEG]
	1	1	1	1	1	1	1	1	1	1	1	1	1	1	1	1	1	1	1	1	1	1	1	1	1	
	8.7t	8.7t	8.7t	8.7t	8.7t	8.7t	8.7t	8.7t	8.7t	8.7t	8.7t	8.7t	8.7t	8.7t	8.7t	8.7t	8.7t	8.7t	8.7t	8.7t	8.7t	8.7t	8.7t	8.7t	8.7t	

m	52.3	52.3	52.3	52.3	52.3	52.3	52.3	52.3	52.3	52.3	56.0	56.0	56.0	56.0	56.0	60.0	60.0	60.0	60.0	60.0						m
°	5	15	30	45	60	5	15	30	45	60	5	15	30	45	60	5	15	30	45	60						°
3.0																										3.0
3.5																										3.5
4.0																										4.0
4.5																										4.5
5.0																										5.0
6.0																										6.0
7.0																										7.0
8.0																										8.0
9.0																										9.0
10.0	3.9					4.4																				10.0
11.0	3.9					4.4					3.7															11.0
12.0	3.9	3.9				4.4	4.4				3.7															12.0
14.0	3.9	3.9	3.9			4.4	4.4	4.4			3.7	3.7	3.7			3.2	3.2									14.0
16.0	3.9	3.9	3.9	3.9	3.9	4.4	4.4	4.4	4.4	4.4	3.7	3.7	3.7	3.7	3.7	3.2	3.2	3.2	3.2							16.0
18.0	3.9	3.9	3.9	3.9	3.9	4.4	4.4	4.4	4.4	4.4	3.7	3.7	3.7	3.7	3.7	3.2	3.2	3.2	3.2	3.2						18.0
20.0	3.9	3.9	3.9	3.9		4.4	4.4	4.4	4.4		3.7	3.7	3.7	3.7		3.2	3.2	3.2	3.2	3.2						20.0
22.0	3.9	3.9	3.9	3.9		4.4	4.4	4.4	4.4		3.7	3.7	3.7	3.7		3.2	3.2	3.2	3.2							22.0
24.0	3.9	3.9	3.9	3.9		4.4	4.4	4.4	4.4		3.7	3.7	3.7	3.7		3.2	3.2	3.2	3.2							24.0
26.0	3.9	3.9	3.7	3.6		4.4	4.4	4.2	4.1		3.7	3.7	3.7	3.6		3.2	3.2	3.2	3.2							26.0
28.0	3.7	3.6	3.5	3.4		4.3	4.2	4.0	3.9		3.7	3.6	3.5	3.4		3.2	3.2	3.2	3.2							28.0
30.0	3.5	3.4	3.3	3.2		4.1	3.9	3.8	3.7		3.5	3.4	3.3	3.2		3.2	3.2	3.1	3.0							30.0
32.0	3.3	3.2	3.1			3.8	3.7	3.6			3.3	3.2	3.1	3.0		3.0	3.0	2.9	2.8							32.0
34.0	3.1	3.0	2.9			3.2	3.3	3.4			3.1	3.0	2.9			2.9	2.8	2.7	2.7							34.0
36.0	2.9	2.9	2.8			2.6	2.7	2.9			2.8	2.8	2.8			2.7	2.7	2.6								36.0
38.0	2.6	2.7	2.7			2.1	2.2	2.4			2.2	2.4	2.5			2.2	2.3	2.5								38.0
40.0	2.1	2.3	2.4			1.6	1.7	1.9			1.8	1.9	2.0			1.7	1.8	2.0								40.0
42.0	1.7	1.8	1.9			1.2	1.3	1.4			1.4	1.5	1.6			1.3	1.4	1.5								42.0
44.0	1.3	1.4					0.9				1.0	1.1	1.2				1.0	1.1								44.0
46.0	1.0	1.1																								46.0
48.0																										48.0
50.0																										50.0
52.0																										52.0
54.0																										54.0
56.0																										56.0
58.0																										58.0
60.0																										60.0
64.0																										64.0
1	46	46	46	46	46	92	92	92	92	92	92	92	92	92	92	100	100	100	100	100						1
2	92	92	92	92	92	92	92	92	92	92	92	92	92	92	92	100	100	100	100	100						2
3	92	92	92	92	92	92	92	92	92	92	92	92	92	92	92	100	100	100	100	100						3
4	92	92	92	92	92	92	92	92	92	92	92	92	92	92	92	100	100	100	100	100						4
5	92	92	92	92	92	92	92	92	92	92	92	92	92	92	92	100	100	100	100	100						5
6	92	92	92	92	92	46	46	46	46	46	92	92	92	92	92	100	100	100	100	100						6
ID	28	28	28	28	28	39	39	39	39	39	29	29	29	29	29	19	19	19	19	19						ID
[DEG]	42~84.7	43~84.7	50~84.7	66~84.7	78~84.7	48~84.7	46~84.7	50~84.7	66~84.7	78~84.7	49~84.7	50~84.7	51~84.7	66~84.7	79~84.7	55~84.7	54~84.7	55~84.7	66~84.7	79~84.7						[DEG]
	1	1	1	1	1	1	1	1	1	1	1	1	1	1	1	1	1	1	1	1						
	8.7t	8.7t	8.7t	8.7t	8.7t	8.7t	8.7t	8.7t	8.7t	8.7t	8.7t	8.7t	8.7t	8.7t	8.7t	8.7t	8.7t	8.7t	8.7t	8.7t						

フルオートラフィングジブ

FLJ	1.6m + 12.4m	34.1 t	8.0m x 6.2m	360 °	JPN

m	11.4	11.4	11.4	11.4	11.4	15.1	15.1	15.1	15.1	15.1	15.1	15.1	15.1	15.1	15.1	15.1	15.1	15.1	15.1	15.1	18.8	18.8	18.8	18.8	18.8	m
°	5	15	30	45	60	5	15	30	45	60	5	15	30	45	60	5	15	30	45	60	5	15	30	45	60	°
3.0	4.3																									3.0
3.5	4.3																									3.5
4.0	4.3					4.3					4.3					4.3					4.3					4.0
4.5	4.3					4.3					4.3					4.3					4.3					4.5
5.0	4.3					4.3					4.3					4.3					4.3					5.0
6.0	4.3	4.3				4.3	4.3				4.3	4.3				4.3	4.3				4.3					6.0
7.0	4.3	4.3				4.3	4.3				4.3	4.3				4.3	4.3				4.3	4.3				7.0
8.0	4.3	4.3				4.3	4.3				4.3	4.3				4.3	4.3				4.3	4.3				8.0
9.0	4.3	4.3	4.3			4.3	4.3	4.3			4.3	4.3	4.3			4.3	4.3	4.3			4.3	4.3				9.0
10.0	4.3	4.3	4.1			4.3	4.3	4.3			4.3	4.3	4.3			4.3	4.3	4.3			4.3	4.3	4.3			10.0
11.0	4.3	4.3	3.9	3.2		4.3	4.3	4.1	3.3		4.3	4.3	4.1	3.3		4.3	4.3	4.1	3.3		4.3	4.3	4.1			11.0
12.0	4.3	4.3	3.7	3.1		4.3	4.3	3.9	3.2		4.3	4.3	3.9	3.2		4.3	4.3	3.9	3.2		4.3	4.3	3.9	3.3		12.0
14.0	4.3	4.0	3.3	2.9		4.3	4.3	3.5	3.0		4.3	4.3	3.5	3.0		4.3	4.3	3.5	3.0		4.3	4.3	3.7	3.1		14.0
16.0	3.8	3.5	3.0	2.7		4.3	3.9	3.3	2.8		4.3	3.9	3.3	2.8		4.3	3.9	3.3	2.8		4.3	4.1	3.4	2.9		16.0
18.0	3.4	3.2	2.8			3.9	3.6	3.0	2.7		3.9	3.6	3.0	2.7		3.9	3.6	3.0	2.7		4.3	3.8	3.2	2.8		18.0
20.0	3.0	2.9				3.5	3.3	2.9			3.5	3.3	2.9			3.5	3.3	2.9			4.0	3.5	3.0	2.7		20.0
22.0	2.7					3.2	3.0				3.2	3.0				3.2	3.0				3.6	3.3	2.9			22.0
24.0						2.9	2.8				2.9	2.8				2.9	2.8				3.3	3.1	2.8			24.0
26.0																					3.0	2.9				26.0
28.0																					2.8					28.0
30.0																										30.0
32.0																										32.0
34.0																										34.0
36.0																										36.0
38.0																										38.0
40.0																										40.0
42.0																										42.0
44.0																										44.0
46.0																										46.0
48.0																										48.0
50.0																										50.0
52.0																										52.0
54.0																										54.0
56.0																										56.0
58.0																										58.0
60.0																										60.0
64.0																										64.0
1	0	0	0	0		0	0	0	0		0	0	0	0		0	0	0	0		0	0	0	0		1
2	0	0	0	0		0	0	0	0		0	0	0	0		46	46	46	46		0	0	0	0		2
3	0	0	0	0		0	0	0	0		46	46	46	46		0	0	0	0		0	0	0	0		3
4	0	0	0	0		46	46	46	46		0	0	0	0		0	0	0	0		0	0	0	0		4
5	0	0	0	0		0	0	0	0		0	0	0	0		0	0	0	0		46	46	46	46		5
6	0	0	0	0		0	0	0	0		0	0	0	0		0	0	0	0		46	46	46	46		6
ID	1	1	1	1		76	76	76	76		105	105	105	105		131	131	131	131		30	30	30	30		ID
[DEG]	0~84.7	0~84.7	0~84.7	0~84.7		29~84.7	32~84.7	51~84.7	60~84.7		29~84.7	32~84.7	51~84.7	60~84.7		29~84.7	31~84.7	51~84.7	60~84.7		26~84.7	37~84.7	46~84.7	60~84.7		[DEG]
	1	1	1	1		1	1	1	1		1	1	1	1		1	1	1	1		1	1	1	1		
	8.7t	8.7t	8.7t	8.7t		8.7t	8.7t	8.7t	8.7t		8.7t	8.7t	8.7t	8.7t		8.7t	8.7t	8.7t	8.7t		8.7t	8.7t	8.7t	8.7t		

m	18.8	18.8	18.8	18.8	18.8	18.8	18.8	18.8	18.8	18.8	18.8	18.8	18.8	18.8	18.8	22.6	22.6	22.6	22.6	22.6	26.3	26.3	26.3	26.3	26.3	m
°	5	15	30	45	60	5	15	30	45	60	5	15	30	45	60	5	15	30	45	60	5	15	30	45	60	°
3.0																										3.0
3.5																										3.5
4.0	4.3					4.3					4.3															4.0
4.5	4.3					4.3					4.3															4.5
5.0	4.3					4.3					4.3					4.3										5.0
6.0	4.3					4.3					4.3					4.3					4.3					6.0
7.0	4.3	4.3				4.3	4.3				4.3	4.3				4.3	4.3				4.3					7.0
8.0	4.3	4.3				4.3	4.3				4.3	4.3				4.3	4.3				4.3	4.3				8.0
9.0	4.3	4.3				4.3	4.3				4.3	4.3				4.3	4.3				4.3	4.3				9.0
10.0	4.3	4.3	4.3			4.3	4.3	4.3			4.3	4.3	4.3			4.3	4.3				4.3	4.3				10.0
11.0	4.3	4.3	4.1			4.3	4.3	4.2			4.3	4.3	4.2			4.3	4.3	4.1			4.3	4.3	4.3			11.0
12.0	4.3	4.3	4.0	3.3		4.3	4.3	4.0	3.3		4.3	4.3	4.0	3.3		4.3	4.3	4.0			4.3	4.3	4.2			12.0
14.0	4.3	4.3	3.7	3.1		4.3	4.3	3.7	3.1		4.3	4.3	3.7	3.1		4.3	4.3	3.7	3.1		4.3	4.3	3.9	3.2	2.7	14.0
16.0	4.3	4.1	3.5	2.9		4.3	4.2	3.5	2.9		4.3	4.2	3.5	2.9		4.3	4.2	3.5	3.0		4.3	4.3	3.7	3.0	2.6	16.0
18.0	4.3	3.8	3.2	2.8		4.3	3.8	3.2	2.8		4.3	3.9	3.2	2.8		4.3	3.9	3.3	2.9		4.3	4.2	3.5	2.9		18.0
20.0	4.0	3.6	3.0	2.7		4.0	3.6	3.0	2.7		4.0	3.6	3.0	2.7		4.2	3.7	3.1	2.8		4.3	4.0	3.3	2.8		20.0
22.0	3.6	3.3	2.9			3.6	3.3	2.9			3.6	3.3	2.9			3.9	3.4	3.0			4.3	3.7	3.2	2.7		22.0
24.0	3.3	3.1	2.8			3.3	3.1	2.8			3.3	3.1	2.8			3.6	3.3	2.9			4.0	3.5	3.0			24.0
26.0	3.0	2.9				3.0	2.9				3.0	2.9				3.4	3.1	2.8			3.8	3.3	2.9			26.0
28.0	2.8					2.8					2.8					3.2	3.0				3.5	3.2	2.8			28.0
30.0																2.9	2.8				3.3	3.0				30.0
32.0																2.7					3.1	2.9				32.0
34.0																					2.9	2.8				34.0
36.0																					2.7					36.0
38.0																										38.0
40.0																										40.0
42.0																										42.0
44.0																										44.0
46.0																										46.0
48.0																										48.0
50.0																										50.0
52.0																										52.0
54.0																										54.0
56.0																										56.0
58.0																										58.0
60.0																										60.0
64.0																										64.0
1	0	0	0	0		0	0	0	0		0	0	0	0		0	0	0	0		92	92	92	92	92	1
2	0	0	0	0		0	0	0	0		46	46	46	46		0	0	0	0		92	92	92	92	92	2
3	0	0	0	0		46	46	46	46		46	46	46	46		0	0	0	0		0	0	0	0	0	3
4	46	46	46	46		46	46	46	46		0	0	0	0		0	0	0	0		0	0	0	0	0	4
5	46	46	46	46		0	0	0	0		0	0	0	0		46	46	46	46		0	0	0	0	0	5
6	0	0	0	0		0	0	0	0		0	0	0	0		92	92	92	92		0	0	0	0	0	6
ID	58	58	58	58		88	88	88	88		113	113	113	113		20	20	20	20		134	134	134	134	134	ID
[DEG]	26~84.7	37~84.7	46~84.7	60~84.7		26~84.7	37~84.7	46~84.7	60~84.7		26~84.7	37~84.7	46~84.7	60~84.7		24~84.7	34~84.7	49~84.7	65~84.7		22~84.7	31~84.7	50~84.7	64~84.7	77~84.7	[DEG]
	1	1	1	1		1	1	1	1		1	1	1	1		1	1	1	1		1	1	1	1	1	
	8.7t	8.7t	8.7t	8.7t		8.7t	8.7t	8.7t	8.7t		8.7t	8.7t	8.7t	8.7t		8.7t	8.7t	8.7t	8.7t		8.7t	8.7t	8.7t	8.7t	8.7t	

FLJ	1.6m + 12.4m	34.1 t	8.0m x 6.2m	360 °	JPN

m	30.0	30.0	30.0	30.0	30.0	30.0	30.0	30.0	30.0	30.0	33.7	33.7	33.7	33.7	33.7	37.4	37.4	37.4	37.4	37.4	37.4	37.4	37.4	37.4	37.4	m
°	5	15	30	45	60	5	15	30	45	60	5	15	30	45	60	5	15	30	45	60	5	15	30	45	60	°
3.0																										3.0
3.5																										3.5
4.0																										4.0
4.5																										4.5
5.0																										5.0
6.0	4.0					4.3																				6.0
7.0	4.0					4.3					4.3					4.1										7.0
8.0	4.0					4.3					4.3					4.1					4.3					8.0
9.0	4.0	4.0				4.3	4.3				4.3	4.3				4.1					4.3					9.0
10.0	4.0	4.0				4.3	4.3				4.3	4.3				4.1	4.1				4.3	4.3				10.0
11.0	4.0	4.0				4.3	4.3	4.3			4.3	4.3				4.1	4.1				4.3	4.3				11.0
12.0	4.0	4.0	4.0			4.3	4.3	4.2			4.3	4.3	4.2			4.1	4.1				4.3	4.3				12.0
14.0	4.0	4.0	3.7	3.2		4.3	4.3	3.9	3.2		4.3	4.3	3.9	3.3		4.1	4.1	3.9			4.3	4.3	3.7			14.0
16.0	4.0	4.0	3.5	3.1		4.3	4.3	3.7	3.1		4.3	4.3	3.7	3.2	2.6	4.1	4.1	3.7	3.2	2.6	4.3	4.3	3.5	3.1		16.0
18.0	4.0	4.0	3.4	3.0		4.3	4.3	3.5	3.0		4.3	4.3	3.6	3.0	2.6	4.1	4.1	3.6	3.1	2.6	4.3	4.1	3.4	3.0		18.0
20.0	4.0	3.8	3.2	2.9		4.3	4.1	3.4	2.9		4.3	4.1	3.4	2.9		4.1	4.1	3.4	3.0		4.3	3.9	3.2	2.9		20.0
22.0	4.0	3.6	3.1	2.8		4.3	3.8	3.2	2.8		4.3	3.9	3.3	2.8		4.1	3.9	3.3	2.9		4.2	3.7	3.1	2.8		22.0
24.0	3.7	3.4	3.0	2.7		4.2	3.6	3.1	2.7		4.3	3.7	3.1	2.8		4.1	3.8	3.2	2.8		3.9	3.5	3.0	2.7		24.0
26.0	3.4	3.3	2.9			3.9	3.5	3.0			4.1	3.5	3.0	2.7		4.1	3.6	3.0	2.7		3.6	3.4	2.9	2.7		26.0
28.0	3.1	3.1	2.8			3.7	3.3	2.9			3.9	3.4	2.9			4.0	3.4	2.9	2.7		3.3	3.2	2.8	2.6		28.0
30.0	2.8	2.8	2.7			3.5	3.2	2.8			3.7	3.2	2.8			3.8	3.3	2.9			3.1	3.0	2.7			30.0
32.0	2.5	2.5	2.5			3.4	3.0	2.7			3.5	3.1	2.8			3.6	3.2	2.8			2.9	2.8	2.7			32.0
34.0	2.2	2.2				3.2	2.9				3.3	3.0	2.7			3.3	3.1	2.7			2.7	2.7	2.6			34.0
36.0		2.0				2.8	2.8				2.7	2.9				2.7	3.0	2.7			2.5	2.4	2.4			36.0
38.0						2.2					2.2	2.3				2.2	2.4				2.3	2.2				38.0
40.0												1.8				1.7	1.9				2.1	2.0				40.0
42.0																1.3	1.4				1.9	1.9				42.0
44.0																										44.0
46.0																										46.0
48.0																										48.0
50.0																										50.0
52.0																										52.0
54.0																										54.0
56.0																										56.0
58.0																										58.0
60.0																										60.0
64.0																										64.0
1	0	0	0	0		92	92	92	92		92	92	92	92	92	92	92	92	92	92	0	0	0	0		1
2	0	0	0	0		92	92	92	92		92	92	92	92	92	92	92	92	92	92	0	0	0	0		2
3	0	0	0	0		46	46	46	46		92	92	92	92	92	92	92	92	92	92	46	46	46	46		3
4	46	46	46	46		0	0	0	0		0	0	0	0	0	46	46	46	46	46	92	92	92	92		4
5	92	92	92	92		0	0	0	0		0	0	0	0	0	0	0	0	0	0	92	92	92	92		5
6	92	92	92	92		0	0	0	0		0	0	0	0	0	0	0	0	0	0	92	92	92	92		6
ID	22	22	22	22		116	116	116	116		110	110	110	110	110	93	93	93	93	93	24	24	24	24		ID
[DEG]	39~84.7	36~84.7	47~84.7	64~84.7		28~84.7	36~84.7	47~84.7	64~84.7		37~84.7	33~84.7	49~84.7	64~84.7	77~84.7	35~84.7	36~84.7	50~84.7	64~84.7	79~84.7	35~84.7	37~84.7	50~84.7	64~84.7		[DEG]
	1	1	1	1		1	1	1	1		1	1	1	1	1	1	1	1	1	1	1	1	1	1		
	8.7t	8.7t	8.7t	8.7t		8.7t	8.7t	8.7t	8.7t		8.7t	8.7t	8.7t	8.7t	8.7t	8.7t	8.7t	8.7t	8.7t	8.7t	8.7t	8.7t	8.7t	8.7t		

m	41.2	41.2	41.2	41.2	41.2	44.9	44.9	44.9	44.9	44.9	44.9	44.9	44.9	44.9	44.9	48.6	48.6	48.6	48.6	48.6	48.6	48.6	48.6	48.6	48.6	m
°	5	15	30	45	60	5	15	30	45	60	5	15	30	45	60	5	15	30	45	60	5	15	30	45	60	°
3.0																										3.0
3.5																										3.5
4.0																										4.0
4.5																										4.5
5.0																										5.0
6.0																										6.0
7.0																										7.0
8.0	4.3																									8.0
9.0	4.3										4.0															9.0
10.0	4.3					3.0					4.0					3.2					3.6					10.0
11.0	4.3	4.3				3.0					4.0	4.0				3.2					3.6					11.0
12.0	4.3	4.3				3.0	3.0				4.0	4.0				3.2	3.2				3.6	3.6				12.0
14.0	4.3	4.3	3.9			3.0	3.0				4.0	4.0				3.2	3.2				3.6	3.6				14.0
16.0	4.3	4.3	3.7	3.2		3.0	3.0	3.0			4.0	4.0	3.7			3.2	3.2	3.2			3.6	3.6	3.6			16.0
18.0	4.3	4.3	3.5	3.1	2.6	3.0	3.0	3.0	2.9		4.0	4.0	3.5	3.0	2.6	3.2	3.2	3.2	3.0		3.6	3.6	3.5	3.0		18.0
20.0	4.3	4.1	3.4	3.0	2.6	3.0	3.0	3.0	2.9		4.0	4.0	3.4	2.9	2.6	3.2	3.2	3.2	2.9	2.6	3.6	3.6	3.3	2.9	2.6	20.0
22.0	4.3	4.0	3.3	2.9		3.0	3.0	3.0	2.8		4.0	3.9	3.2	2.9		3.2	3.2	3.2	2.8	2.5	3.6	3.6	3.2	2.8	2.5	22.0
24.0	4.3	3.8	3.2	2.8		3.0	3.0	3.0	2.7		4.0	3.7	3.1	2.8		3.2	3.2	3.1	2.7		3.6	3.6	3.1	2.8		24.0
26.0	4.2	3.6	3.0	2.7		3.0	3.0	2.9	2.6		4.0	3.6	3.0	2.7		3.2	3.2	3.0	2.7		3.6	3.5	3.0	2.7		26.0
28.0	4.0	3.5	2.9	2.7		3.0	3.0	2.8	2.6		4.0	3.5	2.9	2.7		3.2	3.2	2.9	2.6		3.6	3.4	2.9	2.6		28.0
30.0	3.8	3.3	2.9	2.6		3.0	3.0	2.7	2.5		3.8	3.3	2.9	2.6		3.2	3.2	2.8	2.6		3.6	3.3	2.8	2.6		30.0
32.0	3.6	3.2	2.8			3.0	2.9	2.7	2.5		3.6	3.2	2.8	2.6		3.2	3.1	2.7	2.5		3.6	3.2	2.8	2.5		32.0
34.0	3.4	3.1	2.7			2.8	2.7	2.6			3.5	3.1	2.7			3.2	3.0	2.6	2.5		3.5	3.1	2.7	2.5		34.0
36.0	2.8	3.0	2.6			2.7	2.6	2.5			2.9	3.0	2.6			3.1	2.9	2.6			3.0	3.0	2.6			36.0
38.0	2.2	2.5	2.6			2.5	2.4	2.4			2.4	2.6	2.6			3.0	2.8	2.5			2.5	2.7	2.5			38.0
40.0	1.8	2.0	2.2			2.3	2.3	2.3			1.9	2.1	2.3			2.5	2.7	2.5			2.0	2.2	2.5			40.0
42.0	1.4	1.5				2.2	2.1	2.1			1.5	1.6	1.8			2.1	2.3	2.4			1.6	1.8	2.0			42.0
44.0	1.0	1.1				2.0	2.0				1.1	1.2				1.7	1.9	2.0			1.2	1.4	1.5			44.0
46.0						1.9	1.8					0.9				1.4	1.5					1.0				46.0
48.0						1.7	1.7									1.0	1.2									48.0
50.0						1.4	1.5										0.9									50.0
52.0																										52.0
54.0																										54.0
56.0																										56.0
58.0																										58.0
60.0																										60.0
64.0																										64.0
1	92	92	92	92	92	0	0	0	0		92	92	92	92	92	46	46	46	46	46	92	92	92	92	92	1
2	92	92	92	92	92	46	46	46	46		92	92	92	92	92	92	92	92	92	92	92	92	92	92	92	2
3	92	92	92	92	92	92	92	92	92		92	92	92	92	92	92	92	92	92	92	92	92	92	92	92	3
4	92	92	92	92	92	92	92	92	92		92	92	92	92	92	92	92	92	92	92	92	92	92	92	92	4
5	0	0	0	0	0	92	92	92	92		46	46	46	46	46	92	92	92	92	92	92	92	92	92	92	5
6	0	0	0	0	0	92	92	92	92		0	0	0	0	0	46	46	46	46	46	0	0	0	0	0	6
ID	83	83	83	83	83	26	26	26	26		65	65	65	65	65	38	38	38	38	38	49	49	49	49	49	ID
[DEG]	37~84.7	39~84.7	48~84.7	64~84.7	78~84.7	33~84.7	34~84.7	50~84.7	64~84.7		43~84.7	41~84.7	49~84.7	64~84.7	79~84.7	41~84.7	40~84.7	51~84.7	64~84.7	78~84.7	47~84.7	46~84.7	50~84.7	64~84.7	78~84.7	[DEG]
	1	1	1	1	1	1	1	1	1		1	1	1	1	1	1	1	1	1	1	1	1	1	1	1	
	8.7t	8.7t	8.7t	8.7t	8.7t	8.7t	8.7t	8.7t	8.7t		8.7t	8.7t	8.7t	8.7t	8.7t	8.7t	8.7t	8.7t	8.7t	8.7t	8.7t	8.7t	8.7t	8.7t	8.7t	

フルオートラフィングジブ

FLJ	1.6m + 12.4m	34.1 t	8.0m x 6.2m	360 °	JPN

m	52.3	52.3	52.3	52.3	52.3	52.3	52.3	52.3	52.3	52.3	56.0	56.0	56.0	56.0	56.0	60.0	60.0	60.0	60.0	60.0						m
°	5	15	30	45	60	5	15	30	45	60	5	15	30	45	60	5	15	30	45	60						°
3.0																										3.0
3.5																										3.5
4.0																										4.0
4.5																										4.5
5.0																										5.0
6.0																										6.0
7.0																										7.0
8.0																										8.0
9.0																										9.0
10.0																										10.0
11.0	2.7					3.0																				11.0
12.0	2.7					3.0					2.6															12.0
14.0	2.7	2.7				3.0	3.0				2.6	2.6				1.9										14.0
16.0	2.7	2.7	2.7			3.0	3.0	3.0			2.6	2.6				1.9	1.9									16.0
18.0	2.7	2.7	2.7			3.0	3.0	3.0			2.6	2.6	2.6			1.9	1.9	1.9								18.0
20.0	2.7	2.7	2.7	2.7	2.6	3.0	3.0	3.0	2.9	2.6	2.6	2.6	2.6	2.6		1.9	1.9	1.9	1.9							20.0
22.0	2.7	2.7	2.7	2.7	2.5	3.0	3.0	3.0	2.8	2.5	2.6	2.6	2.6	2.6	2.5	1.9	1.9	1.9	1.9	1.9						22.0
24.0	2.7	2.7	2.7	2.7		3.0	3.0	3.0	2.7		2.6	2.6	2.6	2.6	2.5	1.9	1.9	1.9	1.9	1.9						24.0
26.0	2.7	2.7	2.7	2.6		3.0	3.0	3.0	2.7		2.6	2.6	2.6	2.6		1.9	1.9	1.9	1.9							26.0
28.0	2.7	2.7	2.7	2.6		3.0	3.0	2.9	2.6		2.6	2.6	2.6	2.6		1.9	1.9	1.9	1.9							28.0
30.0	2.7	2.7	2.7	2.5		3.0	3.0	2.8	2.5		2.6	2.6	2.6	2.5		1.9	1.9	1.9	1.9							30.0
32.0	2.7	2.7	2.7	2.5		3.0	3.0	2.7	2.5		2.6	2.6	2.6	2.5		1.9	1.9	1.9	1.9							32.0
34.0	2.7	2.7	2.6	2.4		3.0	3.0	2.6	2.5		2.6	2.6	2.6	2.4		1.9	1.9	1.9	1.9							34.0
36.0	2.7	2.6	2.5	2.4		3.0	2.9	2.6	2.4		2.6	2.6	2.5	2.4		1.9	1.9	1.9	1.9							36.0
38.0	2.5	2.5	2.4			2.6	2.8	2.5			2.5	2.4	2.4	2.3		1.9	1.9	1.9	1.9							38.0
40.0	2.4	2.3	2.3			2.1	2.4	2.5			2.3	2.3	2.2			1.9	1.9	1.9	1.9							40.0
42.0	2.2	2.2	2.2			1.7	1.9	2.1			1.9	2.1	2.1			1.8	1.9	1.9								42.0
44.0	1.8	2.0	2.0			1.3	1.5	1.7			1.5	1.7	1.9			1.4	1.6	1.8								44.0
46.0	1.5	1.6	1.8			1.0	1.1	1.3			1.1	1.3	1.5			1.0	1.2	1.4								46.0
48.0	1.2	1.3	1.4					1.0				1.0	1.1					1.1								48.0
50.0	0.9	1.0																								50.0
52.0																										52.0
54.0																										54.0
56.0																										56.0
58.0																										58.0
60.0																										60.0
64.0																										64.0
1	46	46	46	46	46	92	92	92	92	92	92	92	92	92	92	100	100	100	100	100						1
2	92	92	92	92	92	92	92	92	92	92	92	92	92	92	92	100	100	100	100	100						2
3	92	92	92	92	92	92	92	92	92	92	92	92	92	92	92	100	100	100	100	100						3
4	92	92	92	92	92	92	92	92	92	92	92	92	92	92	92	100	100	100	100	100						4
5	92	92	92	92	92	92	92	92	92	92	92	92	92	92	92	100	100	100	100	100						5
6	92	92	92	92	92	46	46	46	46	46	92	92	92	92	92	100	100	100	100	100						6
ID	28	28	28	28	28	39	39	39	39	39	29	29	29	29	29	19	19	19	19	19						ID
[DEG]	43~84.7	45~84.7	49~84.7	65~84.7	79~84.7	48~84.7	50~84.7	49~84.7	65~84.7	79~84.7	52~84.7	51~84.7	52~84.7	65~84.7	79~84.7	55~84.7	57~84.7	56~84.7	65~84.7	79~84.7						[DEG]
	1	1	1	1	1	1	1	1	1	1	1	1	1	1	1	1	1	1	1	1						
	8.7t	8.7t	8.7t	8.7t	8.7t	8.7t	8.7t	8.7t	8.7t	8.7t	8.7t	8.7t	8.7t	8.7t	8.7t	8.7t	8.7t	8.7t	8.7t	8.7t						

FLJ	1.6m + 17.4m	34.1 t	8.0m x 6.2m	360 °	JPN

m	11.4	11.4	11.4	11.4	11.4	15.1	15.1	15.1	15.1	15.1	15.1	15.1	15.1	15.1	15.1	15.1	15.1	15.1	15.1	15.1	18.8	18.8	18.8	18.8	18.8	m
°	5	15	30	45	60	5	15	30	45	60	5	15	30	45	60	5	15	30	45	60	5	15	30	45	60	°
3.0																										3.0
3.5																										3.5
4.0																										4.0
4.5	3.3																									4.5
5.0	3.3					3.1					3.3					3.3										5.0
6.0	3.3					3.1					3.3					3.3					2.7					6.0
7.0	3.3					3.1					3.3					3.3					2.7					7.0
8.0	3.3	3.3				3.1					3.3					3.3					2.7					8.0
9.0	3.3	3.3				3.1	3.1				3.3	3.3				3.3	3.3				2.7	2.7				9.0
10.0	3.3	3.2				3.1	3.1				3.3	3.3				3.3	3.3				2.7	2.7				10.0
11.0	3.3	3.0				3.1	3.1				3.3	3.1				3.3	3.1				2.7	2.7				11.0
12.0	3.2	2.9	2.5			3.1	2.9				3.3	2.9				3.3	3.0				2.7	2.7				12.0
14.0	2.9	2.6	2.3			3.1	2.7	2.3			3.1	2.7	2.3			3.1	2.7	2.3			2.7	2.7	2.3			14.0
16.0	2.6	2.4	2.1	1.8		2.8	2.5	2.2	1.9		2.8	2.5	2.2	1.9		2.8	2.5	2.2	1.9		2.7	2.5	2.2			16.0
18.0	2.4	2.2	1.9	1.7		2.6	2.3	2.0	1.8		2.6	2.3	2.0	1.8		2.6	2.3	2.0	1.8		2.7	2.4	2.0	1.8		18.0
20.0	2.2	2.0	1.8	1.6		2.4	2.1	1.9	1.7		2.4	2.1	1.9	1.7		2.4	2.1	1.9	1.7		2.5	2.2	1.9	1.7		20.0
22.0	2.0	1.9	1.7			2.2	2.0	1.8	1.6		2.2	2.0	1.8	1.6		2.2	2.0	1.8	1.6		2.3	2.1	1.8	1.6		22.0
24.0	1.8	1.7				2.1	1.9	1.7			2.1	1.9	1.7			2.1	1.9	1.7			2.2	2.0	1.8	1.6		24.0
26.0	1.7	1.6				1.9	1.8	1.6			1.9	1.8	1.6			1.9	1.8	1.6			2.0	1.9	1.7			26.0
28.0						1.8	1.6				1.8	1.6				1.8	1.6				1.9	1.8	1.6			28.0
30.0						1.6					1.6					1.6					1.9	1.7				30.0
32.0																					1.7	1.6				32.0
34.0																					1.6					34.0
36.0																										36.0
38.0																										38.0
40.0																										40.0
42.0																										42.0
44.0																										44.0
46.0																										46.0
48.0																										48.0
50.0																										50.0
52.0																										52.0
54.0																										54.0
56.0																										56.0
58.0																										58.0
60.0																										60.0
64.0																										64.0
1	0	0	0	0		0	0	0	0		0	0	0	0		0	0	0	0		0	0	0	0		1
2	0	0	0	0		0	0	0	0		0	0	0	0		46	46	46	46		0	0	0	0		2
3	0	0	0	0		0	0	0	0		46	46	46	46		0	0	0	0		0	0	0	0		3
4	0	0	0	0		46	46	46	46		0	0	0	0		0	0	0	0		0	0	0	0		4
5	0	0	0	0		0	0	0	0		0	0	0	0		0	0	0	0		46	46	46	46		5
6	0	0	0	0		0	0	0	0		0	0	0	0		0	0	0	0		46	46	46	46		6
ID	1	1	1	1		76	76	76	76		105	105	105	105		131	131	131	131		30	30	30	30		ID
[DEG]	0~84.7	0~84.7	0~84.7	0~84.7		23~84.7	36~84.7	47~84.7	63~84.7		23~84.7	36~84.7	47~84.7	63~84.7		23~84.7	36~84.7	47~84.7	63~84.7		21~84.7	33~84.7	49~84.7	63~84.7		[DEG]
	1	1	1	1		1	1	1	1		1	1	1	1		1	1	1	1		1	1	1	1		
	8.7t	8.7t	8.7t	8.7t		8.7t	8.7t	8.7t	8.7t		8.7t	8.7t	8.7t	8.7t		8.7t	8.7t	8.7t	8.7t		8.7t	8.7t	8.7t	8.7t		

FLJ	1.6m + 17.4m	34.1 t	8.0m x 6.2m	360 °	JPN

m	18.8	18.8	18.8	18.8	18.8	18.8	18.8	18.8	18.8	18.8	18.8	18.8	18.8	18.8	18.8	22.6	22.6	22.6	22.6	22.6	26.3	26.3	26.3	26.3	26.3	m
°	5	15	30	45	60	5	15	30	45	60	5	15	30	45	60	5	15	30	45	60	5	15	30	45	60	°
3.0																										3.0
3.5																										3.5
4.0																										4.0
4.5																										4.5
5.0																										5.0
6.0	2.9					3.2					3.3					2.5										6.0
7.0	2.9					3.2					3.3					2.5					3.3					7.0
8.0	2.9					3.2					3.3					2.5					3.3					8.0
9.0	2.9	2.9				3.2	3.2				3.3	3.3				2.5					3.3					9.0
10.0	2.9	2.9				3.2	3.2				3.3	3.3				2.5	2.5				3.3	3.3				10.0
11.0	2.9	2.9				3.2	3.2				3.3	3.2				2.5	2.5				3.3	3.3				11.0
12.0	2.9	2.9				3.2	3.0				3.3	3.0				2.5	2.5				3.3	3.2				12.0
14.0	2.9	2.8	2.3			3.2	2.8	2.3			3.2	2.8	2.3			2.5	2.5	2.3			3.3	2.9	2.4			14.0
16.0	2.9	2.5	2.2	1.9		2.9	2.6	2.2	1.9		3.0	2.6	2.2	1.9		2.5	2.5	2.2			3.2	2.7	2.2			16.0
18.0	2.7	2.4	2.1	1.8		2.7	2.4	2.1	1.8		2.7	2.4	2.1	1.8		2.5	2.4	2.1	1.8		3.0	2.5	2.1	1.9		18.0
20.0	2.5	2.2	1.9	1.7		2.5	2.2	1.9	1.7		2.5	2.2	2.0	1.7		2.5	2.3	1.9	1.7		2.8	2.4	2.0	1.8		20.0
22.0	2.3	2.1	1.9	1.6		2.3	2.1	1.9	1.6		2.4	2.1	1.9	1.6		2.4	2.1	1.9	1.7		2.6	2.3	1.9	1.7		22.0
24.0	2.2	2.0	1.8	1.6		2.2	2.0	1.8	1.6		2.2	2.0	1.8	1.6		2.3	2.0	1.8	1.6		2.4	2.1	1.9	1.6		24.0
26.0	2.1	1.9	1.7			2.1	1.9	1.7			2.1	1.9	1.7			2.1	1.9	1.7	1.5		2.3	2.0	1.8	1.6		26.0
28.0	1.9	1.8	1.6			2.0	1.8	1.6			2.0	1.8	1.6			2.0	1.8	1.7			2.2	1.9	1.7	1.5		28.0
30.0	1.9	1.7				1.9	1.7				1.9	1.7				1.9	1.8	1.6			2.1	1.9	1.7			30.0
32.0	1.7	1.6				1.7	1.6				1.7	1.6				1.8	1.7				2.0	1.8	1.6			32.0
34.0	1.6					1.6					1.6					1.8	1.6				1.9	1.7	1.6			34.0
36.0																1.7					1.8	1.7				36.0
38.0																					1.7	1.6				38.0
40.0																					1.6					40.0
42.0																										42.0
44.0																										44.0
46.0																										46.0
48.0																										48.0
50.0																										50.0
52.0																										52.0
54.0																										54.0
56.0																										56.0
58.0																										58.0
60.0																										60.0
64.0																										64.0
1	0	0	0	0		0	0	0	0		0	0	0	0		0	0	0	0		92	92	92	92		1
2	0	0	0	0		0	0	0	0		46	46	46	46		0	0	0	0		92	92	92	92		2
3	0	0	0	0		46	46	46	46		46	46	46	46		0	0	0	0		0	0	0	0		3
4	46	46	46	46		46	46	46	46		0	0	0	0		0	0	0	0		0	0	0	0		4
5	46	46	46	46		0	0	0	0		0	0	0	0		46	46	46	46		0	0	0	0		5
6	0	0	0	0		0	0	0	0		0	0	0	0		92	92	92	92		0	0	0	0		6
ID	58	58	58	58		88	88	88	88		113	113	113	113		20	20	20	20		134	134	134	134		ID
[DEG]	21~84.7	32~84.7	49~84.7	63~84.7		21~84.7	32~84.7	49~84.7	63~84.7		21~84.7	32~84.7	49~84.7	63~84.7		28~84.7	37~84.7	51~84.7	63~84.7		26~84.7	34~84.7	47~84.7	62~84.7		[DEG]
	1	1	1	1		1	1	1	1		1	1	1	1		1	1	1	1		1	1	1	1		
	8.7t	8.7t	8.7t	8.7t		8.7t	8.7t	8.7t	8.7t		8.7t	8.7t	8.7t	8.7t		8.7t	8.7t	8.7t	8.7t		8.7t	8.7t	8.7t	8.7t		

m	30.0	30.0	30.0	30.0	30.0	30.0	30.0	30.0	30.0	30.0	33.7	33.7	33.7	33.7	33.7	37.4	37.4	37.4	37.4	37.4	37.4	37.4	37.4	37.4	37.4	m
°	5	15	30	45	60	5	15	30	45	60	5	15	30	45	60	5	15	30	45	60	5	15	30	45	60	°
3.0																										3.0
3.5																										3.5
4.0																										4.0
4.5																										4.5
5.0																										5.0
6.0																										6.0
7.0																										7.0
8.0	2.3					3.2					3.1															8.0
9.0	2.3					3.2					3.1					2.4					2.5					9.0
10.0	2.3					3.2					3.1					2.4					2.5					10.0
11.0	2.3	2.3				3.2	3.2				3.1					2.4					2.5					11.0
12.0	2.3	2.3				3.2	3.2				3.1	3.1				2.4	2.4				2.5					12.0
14.0	2.3	2.3				3.2	2.9				3.1	3.0				2.4	2.4				2.5	2.5				14.0
16.0	2.3	2.3	2.2			3.2	2.8	2.3			3.1	2.8	2.3			2.4	2.4	2.2			2.5	2.5				16.0
18.0	2.3	2.3	2.1			3.1	2.6	2.2	1.9		3.1	2.6	2.2			2.4	2.4	2.2			2.5	2.5	2.1			18.0
20.0	2.3	2.3	2.0	1.8		2.9	2.4	2.1	1.8	1.5	2.9	2.5	2.1	1.8		2.4	2.4	2.1	1.8		2.5	2.4	2.0	1.8		20.0
22.0	2.3	2.2	1.9	1.7		2.7	2.3	2.0	1.7	1.5	2.7	2.3	2.0	1.8		2.4	2.4	2.0	1.8	1.5	2.5	2.2	1.9	1.7	1.5	22.0
24.0	2.3	2.1	1.8	1.7		2.5	2.2	1.9	1.7		2.6	2.2	1.9	1.7		2.4	2.2	1.9	1.7	1.5	2.5	2.1	1.8	1.7	1.5	24.0
26.0	2.3	2.0	1.8	1.6		2.4	2.1	1.8	1.6		2.4	2.1	1.8	1.6		2.4	2.2	1.8	1.7		2.4	2.1	1.8	1.6		26.0
28.0	2.2	1.9	1.7	1.6		2.3	2.0	1.8	1.6		2.3	2.0	1.8	1.6		2.4	2.1	1.8	1.6		2.2	2.0	1.7	1.6		28.0
30.0	2.1	1.8	1.6	1.5		2.2	1.9	1.7	1.5		2.2	1.9	1.7	1.5		2.3	2.0	1.7	1.6		2.1	1.9	1.7	1.5		30.0
32.0	2.0	1.8	1.6			2.1	1.8	1.6			2.1	1.9	1.7	1.5		2.2	1.9	1.7	1.5		2.1	1.8	1.6	1.5		32.0
34.0	1.9	1.7	1.6			2.0	1.8	1.6			2.0	1.8	1.6			2.1	1.8	1.6	1.5		2.0	1.8	1.6	1.5		34.0
36.0		1.7	1.5			1.9	1.7	1.6			1.9	1.8	1.6			2.0	1.8	1.6			1.9	1.7	1.5			36.0
38.0		1.6				1.8	1.7				1.9	1.7	1.6			1.9	1.7	1.6			1.8	1.7	1.5			38.0
40.0		1.6				1.8	1.6					1.7				1.9	1.7	1.5			1.8	1.6	1.5			40.0
42.0		1.5				1.7	1.6					1.6				1.8	1.6	1.5			1.7	1.6	1.4			42.0
44.0						1.6						1.6					1.6					1.5				44.0
46.0																	1.4					1.5				46.0
48.0																	1.0					1.5				48.0
50.0																										50.0
52.0																										52.0
54.0																										54.0
56.0																										56.0
58.0																										58.0
60.0																										60.0
64.0																										64.0
1	0	0	0	0		92	92	92	92	92	92	92	92	92		92	92	92	92	92	0	0	0	0	0	1
2	0	0	0	0		92	92	92	92	92	92	92	92	92		92	92	92	92	92	0	0	0	0	0	2
3	0	0	0	0		46	46	46	46	46	92	92	92	92		92	92	92	92	92	46	46	46	46	46	3
4	46	46	46	46		0	0	0	0	0	0	0	0	0		46	46	46	46	46	92	92	92	92	92	4
5	92	92	92	92		0	0	0	0	0	0	0	0	0		0	0	0	0	0	92	92	92	92	92	5
6	92	92	92	92		0	0	0	0	0	0	0	0	0		0	0	0	0	0	92	92	92	92	92	6
ID	22	22	22	22		116	116	116	116	116	110	110	110	110		93	93	93	93	93	24	24	24	24	24	ID
[DEG]	48~84.7	33~84.7	49~84.7	63~84.7		24~84.7	32~84.7	49~84.7	62~84.7	77~84.7	45~84.7	36~84.7	50~84.7	62~84.7		44~84.7	34~84.7	48~84.7	62~84.7	77~84.7	44~84.7	35~84.7	48~84.7	63~84.7	78~84.7	[DEG]
	1	1	1	1		1	1	1	1	1	1	1	1	1		1	1	1	1	1	1	1	1	1	1	
	8.7t	8.7t	8.7t	8.7t		8.7t	8.7t	8.7t	8.7t	8.7t	8.7t	8.7t	8.7t	8.7t		8.7t	8.7t	8.7t	8.7t	8.7t	8.7t	8.7t	8.7t	8.7t	8.7t	

フルオートラフィングジブ

FLJ	1.6m + 17.4m	34.1 t	8.0m x 6.2m	360 °	JPN

m	41.2	41.2	41.2	41.2	41.2	44.9	44.9	44.9	44.9	44.9	44.9	44.9	44.9	44.9	44.9	48.6	48.6	48.6	48.6	48.6	48.6	48.6	48.6	48.6	48.6	m
°	5	15	30	45	60	5	15	30	45	60	5	15	30	45	60	5	15	30	45	60	5	15	30	45	60	°
3.0																										3.0
3.5																										3.5
4.0																										4.0
4.5																										4.5
5.0																										5.0
6.0																										6.0
7.0																										7.0
8.0																										8.0
9.0																										9.0
10.0	2.7										2.4															10.0
11.0	2.7					1.9					2.4					2.0					2.2					11.0
12.0	2.7					1.9					2.4					2.0					2.2					12.0
14.0	2.7	2.7				1.9	1.9				2.4	2.4				2.0	2.0				2.2	2.2				14.0
16.0	2.7	2.7				1.9	1.9				2.4	2.4				2.0	2.0				2.2	2.2				16.0
18.0	2.7	2.6	2.1			1.9	1.9	1.9			2.4	2.4	2.1			2.0	2.0				2.2	2.2				18.0
20.0	2.7	2.5	2.1	1.8		1.9	1.9	1.9			2.4	2.4	2.0			2.0	2.0	2.0			2.2	2.2	2.0			20.0
22.0	2.7	2.4	2.0	1.8	1.5	1.9	1.9	1.9	1.7		2.4	2.4	2.0	1.7		2.0	2.0	1.9	1.7		2.2	2.2	1.9	1.7		22.0
24.0	2.6	2.3	1.9	1.7	1.5	1.9	1.9	1.8	1.7	1.5	2.4	2.2	1.9	1.7	1.5	2.0	2.0	1.9	1.7	1.5	2.2	2.2	1.9	1.7	1.5	24.0
26.0	2.5	2.2	1.8	1.7		1.9	1.9	1.8	1.6	1.5	2.4	2.2	1.8	1.7	1.5	2.0	2.0	1.8	1.6	1.5	2.2	2.1	1.8	1.6	1.5	26.0
28.0	2.4	2.1	1.8	1.6		1.9	1.9	1.7	1.6		2.4	2.1	1.8	1.6		2.0	2.0	1.7	1.6		2.2	2.1	1.8	1.6		28.0
30.0	2.3	2.0	1.7	1.6		1.9	1.9	1.7	1.5		2.3	2.0	1.7	1.6		2.0	2.0	1.7	1.6		2.2	2.0	1.7	1.6		30.0
32.0	2.2	1.9	1.7	1.6		1.9	1.9	1.6	1.5		2.2	1.9	1.7	1.5		2.0	1.9	1.6	1.5		2.2	1.9	1.7	1.5		32.0
34.0	2.1	1.9	1.6	1.5		1.9	1.8	1.6	1.5		2.1	1.9	1.6	1.5		2.0	1.8	1.6	1.5		2.1	1.9	1.6	1.5		34.0
36.0	2.0	1.8	1.6	1.5		1.9	1.7	1.5	1.5		2.0	1.8	1.6	1.5		2.0	1.8	1.6	1.5		2.0	1.8	1.6	1.5		36.0
38.0	1.9	1.7	1.6			1.9	1.7	1.5			2.0	1.7	1.5			1.9	1.7	1.5	1.4		2.0	1.7	1.5	1.4		38.0
40.0	1.9	1.7	1.5			1.8	1.6	1.5			1.9	1.7	1.5			1.9	1.7	1.5			1.9	1.7	1.5			40.0
42.0	1.8	1.6	1.5			1.8	1.6	1.4			1.8	1.6	1.5			1.8	1.6	1.5			1.8	1.6	1.5			42.0
44.0	1.6	1.6	1.5			1.7	1.6	1.4			1.6	1.6	1.5			1.8	1.6	1.4			1.7	1.6	1.4			44.0
46.0	1.2	1.4				1.7	1.5	1.4			1.3	1.5	1.4			1.7	1.5	1.4			1.3	1.6	1.4			46.0
48.0		1.0				1.6	1.5				1.0	1.1				1.5	1.5	1.4			1.0	1.2	1.4			48.0
50.0						1.6	1.5									1.2	1.4	1.4				0.9	1.1			50.0
52.0							1.4									0.9	1.1									52.0
54.0							1.3																			54.0
56.0																										56.0
58.0																										58.0
60.0																										60.0
64.0																										64.0
1	92	92	92	92	92	0	0	0	0	0	92	92	92	92	92	46	46	46	46	46	92	92	92	92	92	1
2	92	92	92	92	92	46	46	46	46	46	92	92	92	92	92	92	92	92	92	92	92	92	92	92	92	2
3	92	92	92	92	92	92	92	92	92	92	92	92	92	92	92	92	92	92	92	92	92	92	92	92	92	3
4	92	92	92	92	92	92	92	92	92	92	92	92	92	92	92	92	92	92	92	92	92	92	92	92	92	4
5	0	0	0	0	0	92	92	92	92	92	46	46	46	46	46	92	92	92	92	92	92	92	92	92	92	5
6	0	0	0	0	0	92	92	92	92	92	0	0	0	0	0	46	46	46	46	46	0	0	0	0	0	6
ID	83	83	83	83	83	26	26	26	26	26	65	65	65	65	65	38	38	38	38	38	49	49	49	49	49	ID
[DEG]	42~84.7	41~84.7	50~84.7	62~84.7	79~84.7	42~84.7	36~84.7	51~84.7	65~84.7	78~84.7	44~84.7	46~84.7	51~84.7	65~84.7	78~84.7	42~84.7	44~84.7	49~84.7	65~84.7	79~84.7	48~84.7	47~84.7	49~84.7	65~84.7	79~84.7	[DEG]
	1	1	1	1	1	1	1	1	1	1	1	1	1	1	1	1	1	1	1	1	1	1	1	1	1	
	8.7t	8.7t	8.7t	8.7t	8.7t	8.7t	8.7t	8.7t	8.7t	8.7t	8.7t	8.7t	8.7t	8.7t	8.7t	8.7t	8.7t	8.7t	8.7t	8.7t	8.7t	8.7t	8.7t	8.7t	8.7t	

m	52.3	52.3	52.3	52.3	52.3	52.3	52.3	52.3	52.3	52.3	56.0	56.0	56.0	56.0	56.0	60.0	60.0	60.0	60.0	60.0						m
°	5	15	30	45	60	5	15	30	45	60	5	15	30	45	60	5	15	30	45	60						°
3.0																										3.0
3.5																										3.5
4.0																										4.0
4.5																										4.5
5.0																										5.0
6.0																										6.0
7.0																										7.0
8.0																										8.0
9.0																										9.0
10.0																										10.0
11.0																										11.0
12.0						2.0																				12.0
14.0	1.8					2.0					1.8															14.0
16.0	1.8	1.8				2.0	2.0				1.8	1.8				1.0										16.0
18.0	1.8	1.8				2.0	2.0				1.8	1.8				1.0	1.0									18.0
20.0	1.8	1.8	1.8			2.0	2.0	2.0			1.8	1.8				1.0	1.0									20.0
22.0	1.8	1.8	1.8			2.0	2.0	1.9			1.8	1.8	1.8			1.0	1.0	1.0								22.0
24.0	1.8	1.8	1.8	1.6		2.0	2.0	1.9	1.7		1.8	1.8	1.8	1.6		1.0	1.0	1.0								24.0
26.0	1.8	1.8	1.8	1.6	1.5	2.0	2.0	1.8	1.6	1.5	1.8	1.8	1.8	1.6	1.5	1.0	1.0	1.0	1.0							26.0
28.0	1.8	1.8	1.7	1.6	1.4	2.0	2.0	1.7	1.6	1.4	1.8	1.8	1.7	1.6	1.4	1.0	1.0	1.0	1.0	1.0						28.0
30.0	1.8	1.8	1.7	1.5		2.0	2.0	1.7	1.5		1.8	1.8	1.7	1.5		1.0	1.0	1.0	1.0	1.0						30.0
32.0	1.8	1.8	1.6	1.5		2.0	1.9	1.6	1.5		1.8	1.8	1.6	1.5		1.0	1.0	1.0	1.0							32.0
34.0	1.8	1.8	1.6	1.5		2.0	1.8	1.6	1.5		1.8	1.8	1.6	1.5		1.0	1.0	1.0	1.0							34.0
36.0	1.8	1.8	1.5	1.4		2.0	1.8	1.6	1.5		1.8	1.8	1.5	1.4		1.0	1.0	1.0	1.0							36.0
38.0	1.8	1.7	1.5	1.4		2.0	1.7	1.5	1.4		1.8	1.7	1.5	1.4		1.0	1.0	1.0	1.0							38.0
40.0	1.8	1.7	1.5	1.4		1.9	1.7	1.5	1.4		1.8	1.7	1.5	1.4		1.0	1.0	1.0	1.0							40.0
42.0	1.8	1.6	1.4			1.8	1.6	1.5			1.8	1.6	1.4	1.4		1.0	1.0	1.0	1.0							42.0
44.0	1.8	1.6	1.4			1.8	1.6	1.4			1.8	1.6	1.4			1.0	1.0	1.0	1.0							44.0
46.0	1.7	1.5	1.4			1.5	1.6	1.4			1.6	1.5	1.4			1.0	1.0	1.0								46.0
48.0	1.6	1.5	1.4			1.1	1.3	1.4			1.2	1.5	1.4			1.0	1.0	1.0								48.0
50.0	1.3	1.5	1.3				1.0	1.3			0.9	1.1	1.3				1.0	1.0								50.0
52.0	1.0	1.2	1.3					0.9				0.9	1.1					1.0								52.0
54.0		0.9																								54.0
56.0																										56.0
58.0																										58.0
60.0																										60.0
64.0																										64.0
1	46	46	46	46	46	92	92	92	92	92	92	92	92	92	92	100	100	100	100	100						1
2	92	92	92	92	92	92	92	92	92	92	92	92	92	92	92	100	100	100	100	100						2
3	92	92	92	92	92	92	92	92	92	92	92	92	92	92	92	100	100	100	100	100						3
4	92	92	92	92	92	92	92	92	92	92	92	92	92	92	92	100	100	100	100	100						4
5	92	92	92	92	92	92	92	92	92	92	92	92	92	92	92	100	100	100	100	100						5
6	92	92	92	92	92	46	46	46	46	46	92	92	92	92	92	100	100	100	100	100						6
ID	28	28	28	28	28	39	39	39	39	39	29	29	29	29	29	19	19	19	19	19						ID
[DEG]	47~84.7	46~84.7	51~84.7	65~84.7	78~84.7	51~84.7	51~84.7	50~84.7	65~84.7	78~84.7	52~84.7	52~84.7	54~84.7	66~84.7	79~84.7	57~84.7	57~84.7	57~84.7	66~84.7	78~84.7						[DEG]
	1	1	1	1	1	1	1	1	1	1	1	1	1	1	1	1	1	1	1	1						
	8.7t	8.7t	8.7t	8.7t	8.7t	8.7t	8.7t	8.7t	8.7t	8.7t	8.7t	8.7t	8.7t	8.7t	8.7t	8.7t	8.7t	8.7t	8.7t	8.7t						

FLJ	1.6m + 7.4m	22.7 t	8.0m x 7.5m	360 °	JPN

m	11.4	11.4	11.4	11.4	11.4	15.1	15.1	15.1	15.1	15.1	15.1	15.1	15.1	15.1	15.1	15.1	15.1	15.1	15.1	15.1	18.8	18.8	18.8	18.8	18.8	m
°	5	15	30	45	60	5	15	30	45	60	5	15	30	45	60	5	15	30	45	60	5	15	30	45	60	°
3.0	7.3					7.3					7.3					7.3					7.3					3.0
3.5	7.3					7.3					7.3					7.3					7.3					3.5
4.0	7.3	7.3				7.3	7.3				7.3	7.3				7.3	7.3				7.3					4.0
4.5	7.3	7.3				7.3	7.3				7.3	7.3				7.3	7.3				7.3					4.5
5.0	7.3	7.3	7.3			7.3	7.3				7.3	7.3				7.3	7.3				7.3	7.3				5.0
6.0	7.3	7.3	7.3			7.3	7.3	7.3			7.3	7.3	7.3			7.3	7.3	7.3			7.3	7.3	7.3			6.0
7.0	7.3	7.3	7.3	6.5	5.0	7.3	7.3	7.3	6.7		7.3	7.3	7.3	6.7		7.3	7.3	7.3	6.7		7.3	7.3	7.3			7.0
8.0	7.3	7.3	7.3	6.3	4.9	7.3	7.3	7.3	6.5	5.0	7.3	7.3	7.3	6.5	5.0	7.3	7.3	7.3	6.5	5.0	7.3	7.3	7.3	6.6	5.0	8.0
9.0	7.3	7.3	7.2	6.0		7.3	7.3	7.3	6.3	4.9	7.3	7.3	7.3	6.3	4.9	7.3	7.3	7.3	6.3	4.9	7.3	7.3	7.3	6.4	4.9	9.0
10.0	7.3	7.3	6.9	5.9		7.3	7.3	7.3	6.1		7.3	7.3	7.3	6.1		7.3	7.3	7.3	6.1		7.3	7.3	7.3	6.3	4.9	10.0
11.0	7.3	7.3	6.6	5.7		7.3	7.3	7.0	5.9		7.3	7.3	7.0	5.9		7.3	7.3	7.0	5.9		7.3	7.3	7.3	6.1		11.0
12.0	7.3	7.0	6.3			7.3	7.3	6.8	5.8		7.3	7.3	6.8	5.8		7.3	7.3	6.8	5.8		7.3	7.3	7.2	6.0		12.0
14.0	6.4	6.2	5.9			7.3	7.1	6.3			7.3	7.1	6.3			7.3	7.1	6.3			7.3	7.3	6.7	5.7		14.0
16.0	5.7	5.7				6.8	6.4	5.9			6.8	6.4	5.9			6.8	6.4	5.9			7.3	7.1	6.3			16.0
18.0						6.0	5.9				6.0	5.9				6.0	5.9				7.0	6.6	6.0			18.0
20.0						5.5					5.5					5.5					6.3	6.1				20.0
22.0																					5.8	5.7				22.0
24.0																					5.3					24.0
26.0																										26.0
28.0																										28.0
30.0																										30.0
32.0																										32.0
34.0																										34.0
36.0																										36.0
38.0																										38.0
40.0																										40.0
42.0																										42.0
44.0																										44.0
46.0																										46.0
48.0																										48.0
50.0																										50.0
52.0																										52.0
54.0																										54.0
56.0																										56.0
58.0																										58.0
60.0																										60.0
64.0																										64.0
1	0	0	0	0	0	0	0	0	0	0	0	0	0	0	0	0	0	0	0	0	0	0	0	0	0	1
2	0	0	0	0	0	0	0	0	0	0	0	0	0	0	0	46	46	46	46	46	0	0	0	0	0	2
3	0	0	0	0	0	0	0	0	0	0	46	46	46	46	46	0	0	0	0	0	0	0	0	0	0	3
4	0	0	0	0	0	46	46	46	46	46	0	0	0	0	0	0	0	0	0	0	0	0	0	0	0	4
5	0	0	0	0	0	0	0	0	0	0	0	0	0	0	0	0	0	0	0	0	46	46	46	46	46	5
6	0	0	0	0	0	0	0	0	0	0	0	0	0	0	0	0	0	0	0	0	46	46	46	46	46	6
ID	1	1	1	1	1	76	76	76	76	76	105	105	105	105	105	131	131	131	131	131	30	30	30	30	30	ID
[DEG]	0~84.7	0~84.7	0~84.7	0~84.7	0~84.7	24~84.7	37~84.7	48~84.7	64~84.7	75~84.7	24~84.7	37~84.7	48~84.7	64~84.7	75~84.7	24~84.7	37~84.7	48~84.7	64~84.7	75~84.7	22~84.7	34~84.7	50~84.7	63~84.7	75~84.7	[DEG]
	1	1	1	1	1	1	1	1	1	1	1	1	1	1	1	1	1	1	1	1	1	1	1	1	1	
	8.7t	8.7t	8.7t	8.7t	8.7t	8.7t	8.7t	8.7t	8.7t	8.7t	8.7t	8.7t	8.7t	8.7t	8.7t	8.7t	8.7t	8.7t	8.7t	8.7t	8.7t	8.7t	8.7t	8.7t	8.7t	

m	18.8	18.8	18.8	18.8	18.8	18.8	18.8	18.8	18.8	18.8	18.8	18.8	18.8	18.8	18.8	22.6	22.6	22.6	22.6	22.6	26.3	26.3	26.3	26.3	26.3	m
°	5	15	30	45	60	5	15	30	45	60	5	15	30	45	60	5	15	30	45	60	5	15	30	45	60	°
3.0	7.3					7.3					7.3															3.0
3.5	7.3					7.3					7.3															3.5
4.0	7.3					7.3	7.3				7.3	7.3				7.3										4.0
4.5	7.3					7.3	7.3				7.3	7.3				7.3										4.5
5.0	7.3	7.3				7.3	7.3				7.3	7.3				7.3	7.3				7.3					5.0
6.0	7.3	7.3	7.3			7.3	7.3	7.3			7.3	7.3	7.3			7.3	7.3				7.3	7.3				6.0
7.0	7.3	7.3	7.3	6.9		7.3	7.3	7.3	6.9		7.3	7.3	7.3	6.9		7.3	7.3	7.3			7.3	7.3				7.0
8.0	7.3	7.3	7.3	6.6	5.0	7.3	7.3	7.3	6.6	5.0	7.3	7.3	7.3	6.6	5.0	7.3	7.3	7.3	6.8		7.3	7.3	7.3			8.0
9.0	7.3	7.3	7.3	6.4	4.9	7.3	7.3	7.3	6.4	4.9	7.3	7.3	7.3	6.4	4.9	7.3	7.3	7.3	6.6	5.0	7.3	7.3	7.3	6.7	5.0	9.0
10.0	7.3	7.3	7.3	6.3	4.9	7.3	7.3	7.3	6.3	4.9	7.3	7.3	7.3	6.3	4.9	7.3	7.3	7.3	6.4	4.9	7.3	7.3	7.3	6.5	4.9	10.0
11.0	7.3	7.3	7.3	6.1		7.3	7.3	7.3	6.1		7.3	7.3	7.3	6.1		7.3	7.3	7.3	6.3	4.8	7.3	7.3	7.3	6.4	4.9	11.0
12.0	7.3	7.3	7.2	6.0		7.3	7.3	7.2	6.0		7.3	7.3	7.2	6.0		7.3	7.3	7.3	6.1		7.3	7.3	7.3	6.3	4.8	12.0
14.0	7.3	7.3	6.7	5.7		7.3	7.3	6.7	5.7		7.3	7.3	6.7	5.7		7.2	6.9	6.5	5.9		7.3	7.3	7.3	6.0		14.0
16.0	7.3	7.1	6.3			7.3	7.1	6.3			7.3	7.1	6.3			6.4	6.1	5.9	5.7		7.3	7.3	7.0	5.8		16.0
18.0	7.0	6.6	6.0			7.0	6.6	6.0			7.0	6.6	6.0			5.7	5.5	5.3			7.3	7.3	6.6	5.7		18.0
20.0	6.3	6.1				6.3	6.1				6.3	6.1				5.1	5.0	4.9			7.3	7.2	6.3			20.0
22.0	5.8	5.7				5.8	5.7				5.8	5.7				4.6	4.5	4.5			7.3	6.8	6.1			22.0
24.0	5.3					5.3					5.3					4.2	4.1				6.0	6.3	5.9			24.0
26.0																3.8	3.8				4.8	5.0				26.0
28.0																					3.7	3.9				28.0
30.0																					2.8					30.0
32.0																										32.0
34.0																										34.0
36.0																										36.0
38.0																										38.0
40.0																										40.0
42.0																										42.0
44.0																										44.0
46.0																										46.0
48.0																										48.0
50.0																										50.0
52.0																										52.0
54.0																										54.0
56.0																										56.0
58.0																										58.0
60.0																										60.0
64.0																										64.0
1	0	0	0	0	0	0	0	0	0	0	0	0	0	0	0	0	0	0	0	0	92	92	92	92	92	1
2	0	0	0	0	0	0	0	0	0	0	46	46	46	46	46	0	0	0	0	0	92	92	92	92	92	2
3	0	0	0	0	0	46	46	46	46	46	46	46	46	46	46	0	0	0	0	0	0	0	0	0	0	3
4	46	46	46	46	46	46	46	46	46	46	0	0	0	0	0	0	0	0	0	0	0	0	0	0	0	4
5	46	46	46	46	46	0	0	0	0	0	0	0	0	0	0	46	46	46	46	46	0	0	0	0	0	5
6	0	0	0	0	0	0	0	0	0	0	0	0	0	0	0	92	92	92	92	92	0	0	0	0	0	6
ID	58	58	58	58	58	88	88	88	88	88	113	113	113	113	113	20	20	20	20	20	134	134	134	134	134	ID
[DEG]	21~84.7	33~84.7	50~84.7	63~84.7	75~84.7	21~84.7	33~84.7	50~84.7	63~84.7	75~84.7	21~84.7	33~84.7	50~84.7	63~84.7	75~84.7	29~84.7	30~84.7	46~84.7	63~84.7	76~84.7	26~84.7	35~84.7	48~84.7	63~84.7	76~84.7	[DEG]
	1	1	1	1	1	1	1	1	1	1	1	1	1	1	1	1	1	1	1	1	1	1	1	1	1	
	8.7t	8.7t	8.7t	8.7t	8.7t	8.7t	8.7t	8.7t	8.7t	8.7t	8.7t	8.7t	8.7t	8.7t	8.7t	8.7t	8.7t	8.7t	8.7t	8.7t	8.7t	8.7t	8.7t	8.7t	8.7t	

フルオートラフィングジブ

FLJ	1.6m + 7.4m	22.7 t	8.0m x 7.5m	360 °	JPN

m	30.0	30.0	30.0	30.0	30.0	30.0	30.0	30.0	30.0	30.0	33.7	33.7	33.7	33.7	33.7	37.4	37.4	37.4	37.4	37.4	37.4	37.4	37.4	37.4	37.4	m
°	5	15	30	45	60	5	15	30	45	60	5	15	30	45	60	5	15	30	45	60	5	15	30	45	60	°
3.0																										3.0
3.5																										3.5
4.0																										4.0
4.5																										4.5
5.0	7.3					7.3																				5.0
6.0	7.3	7.3				7.3	7.3				7.3															6.0
7.0	7.3	7.3				7.3	7.3				7.3	7.3				7.1					7.3					7.0
8.0	7.3	7.3	7.3			7.3	7.3	7.3			7.3	7.3				7.1	7.1				7.3	7.3				8.0
9.0	7.3	7.3	7.3			7.3	7.3	7.3	6.8		7.3	7.3	7.3			7.1	7.1				7.3	7.3				9.0
10.0	7.3	7.3	7.3	6.6	5.0	7.3	7.3	7.3	6.6	5.0	7.3	7.3	7.3	6.7		7.1	7.1	7.1			7.3	7.3	7.3			10.0
11.0	7.3	7.3	7.3	6.5	4.9	7.3	7.3	7.3	6.5	4.9	7.3	7.3	7.3	6.6	4.9	7.1	7.1	7.1	6.7	5.0	7.3	7.3	7.2	6.7		11.0
12.0	7.3	7.3	7.1	6.4	4.9	7.3	7.3	7.3	6.4	4.9	7.3	7.3	7.3	6.5	4.9	7.1	7.1	7.1	6.6	4.9	7.3	7.3	6.9	6.4	4.9	12.0
14.0	6.8	6.6	6.3	6.1		7.3	7.3	7.3	6.1		7.3	7.3	7.3	6.2	4.8	7.1	7.1	7.1	6.3	4.8	6.9	6.6	6.2	5.9	4.8	14.0
16.0	6.0	5.8	5.6	5.5		7.3	7.3	7.2	5.9		7.3	7.3	7.3	6.0		7.1	7.1	7.1	6.1		6.1	5.9	5.7	5.5		16.0
18.0	5.3	5.2	5.1	5.0		7.3	7.3	6.9	5.8		7.3	7.3	7.1	5.9		7.1	7.1	7.1	6.0		5.5	5.4	5.2	5.0		18.0
20.0	4.8	4.7	4.6	4.5		7.3	7.3	6.6	5.6		7.3	7.3	6.8	5.7		7.1	7.1	7.1	5.8		5.0	4.9	4.7	4.6		20.0
22.0	4.3	4.3	4.2			7.3	7.3	6.3			7.3	7.3	6.5	5.6		7.1	7.1	6.8	5.7		4.6	4.5	4.3	4.3		22.0
24.0	3.9	3.9	3.8			6.0	6.3	6.1			6.0	6.3	6.3			6.2	6.5	6.5	5.6		4.2	4.1	4.0	4.0		24.0
26.0	3.5	3.5	3.5			4.8	5.0	5.3			4.7	5.0	5.3			4.9	5.2	5.5			3.9	3.8	3.7			26.0
28.0	3.2	3.1				3.7	3.9				3.7	3.9	4.2			3.8	4.1	4.4			3.6	3.5	3.5			28.0
30.0	2.8	2.8				2.8	3.0				2.8	3.0	3.2			2.9	3.1	3.4			3.4	3.3	3.2			30.0
32.0	2.5	2.5				2.0	2.1				2.0	2.2				2.2	2.3	2.5			3.1	3.1	3.0			32.0
34.0	2.2					1.4					1.4	1.5				1.5	1.6				2.8	2.8				34.0
36.0																0.9	1.0				2.6	2.6				36.0
38.0																					2.4	2.3				38.0
40.0																					2.2					40.0
42.0																										42.0
44.0																										44.0
46.0																										46.0
48.0																										48.0
50.0																										50.0
52.0																										52.0
54.0																										54.0
56.0																										56.0
58.0																										58.0
60.0																										60.0
64.0																										64.0
1	0	0	0	0	0	92	92	92	92	92	92	92	92	92	92	92	92	92	92	92	0	0	0	0	0	1
2	0	0	0	0	0	92	92	92	92	92	92	92	92	92	92	92	92	92	92	92	0	0	0	0	0	2
3	0	0	0	0	0	46	46	46	46	46	92	92	92	92	92	92	92	92	92	92	46	46	46	46	46	3
4	46	46	46	46	46	0	0	0	0	0	0	0	0	0	0	46	46	46	46	46	92	92	92	92	92	4
5	92	92	92	92	92	0	0	0	0	0	0	0	0	0	0	0	0	0	0	0	92	92	92	92	92	5
6	92	92	92	92	92	0	0	0	0	0	0	0	0	0	0	0	0	0	0	0	92	92	92	92	92	6
ID	22	22	22	22	22	116	116	116	116	116	110	110	110	110	110	93	93	93	93	93	24	24	24	24	24	ID
[DEG]	24~84.7	32~84.7	50~84.7	63~84.7	78~84.7	24~84.7	32~84.7	50~84.7	63~84.7	78~84.7	35~84.7	36~84.7	46~84.7	63~84.7	76~84.7	37~84.7	38~84.7	48~84.7	63~84.7	78~84.7	28~84.7	35~84.7	49~84.7	63~84.7	78~84.7	[DEG]
	1	1	1	1	1	1	1	1	1	1	1	1	1	1	1	1	1	1	1	1	1	1	1	1	1	
	8.7t	8.7t	8.7t	8.7t	8.7t	8.7t	8.7t	8.7t	8.7t	8.7t	8.7t	8.7t	8.7t	8.7t	8.7t	8.7t	8.7t	8.7t	8.7t	8.7t	8.7t	8.7t	8.7t	8.7t	8.7t	

m	41.2	41.2	41.2	41.2	41.2	44.9	44.9	44.9	44.9	44.9	44.9	44.9	44.9	44.9	44.9	48.6	48.6	48.6	48.6	48.6	48.6	48.6	48.6	48.6	48.6	m
°	5	15	30	45	60	5	15	30	45	60	5	15	30	45	60	5	15	30	45	60	5	15	30	45	60	°
3.0																										3.0
3.5																										3.5
4.0																										4.0
4.5																										4.5
5.0																										5.0
6.0																										6.0
7.0	7.3																									7.0
8.0	7.3										6.5															8.0
9.0	7.3	7.3				4.6					6.5					4.8					5.4					9.0
10.0	7.3	7.3	7.3			4.6	4.6				6.5	6.5				4.8					5.4					10.0
11.0	7.3	7.3	7.3			4.6	4.6				6.5	6.5	6.5			4.8	4.8				5.4	5.4				11.0
12.0	7.3	7.3	7.3	6.6	4.9	4.6	4.6	4.6			6.5	6.5	6.5			4.8	4.8	4.8			5.4	5.4	5.4			12.0
14.0	7.3	7.3	7.3	6.4	4.9	4.6	4.6	4.6	4.6	4.6	6.5	6.5	6.5	6.5	4.9	4.8	4.8	4.8	4.8	4.8	5.4	5.4	5.4	5.4	4.9	14.0
16.0	7.3	7.3	7.3	6.2		4.6	4.6	4.6	4.6	4.6	6.5	6.5	6.5	6.3	4.8	4.8	4.8	4.8	4.8	4.8	5.4	5.4	5.4	5.4	4.8	16.0
18.0	7.3	7.3	7.2	6.1		4.6	4.6	4.6	4.6		6.5	6.5	6.5	6.1		4.8	4.8	4.8	4.8		5.4	5.4	5.4	5.4		18.0
20.0	7.3	7.3	7.1	5.9		4.6	4.6	4.6	4.6		6.5	6.5	6.5	6.0		4.8	4.8	4.8	4.8		5.4	5.4	5.4	5.4		20.0
22.0	7.3	7.3	6.8	5.8		4.6	4.5	4.3	4.2		6.5	6.5	6.5	5.9		4.8	4.8	4.8	4.7		5.4	5.4	5.4	5.4		22.0
24.0	6.3	6.6	6.6	5.7		4.3	4.2	4.0	4.0		6.3	6.3	6.4	5.8		4.8	4.8	4.6	4.5		5.4	5.4	5.4	5.4		24.0
26.0	5.0	5.3	5.7	5.6		4.0	3.9	3.8	3.7		5.2	5.5	5.9	5.7		4.7	4.5	4.3	4.2		5.4	5.4	5.3	5.3		26.0
28.0	3.9	4.2	4.5			3.7	3.6	3.5	3.5		4.2	4.4	4.7	4.9		4.4	4.2	4.1	4.0		4.3	4.6	4.9	5.0		28.0
30.0	3.0	3.3	3.5			3.5	3.4	3.3			3.3	3.5	3.8			4.1	4.0	3.9	3.8		3.4	3.7	4.0	4.1		30.0
32.0	2.3	2.5	2.7			3.3	3.2	3.1			2.5	2.7	2.9			3.3	3.5	3.7			2.7	2.9	3.1			32.0
34.0	1.6	1.8	2.0			3.1	3.0	3.0			1.8	2.0	2.2			2.7	2.8	3.0			2.0	2.2	2.4			34.0
36.0	1.0	1.2				2.9	2.9	2.8			1.2	1.4	1.5			2.1	2.2	2.4			1.4	1.6	1.7			36.0
38.0						2.4	2.5									1.5	1.7	1.8			0.9	1.0	1.2			38.0
40.0						1.9	2.0									1.1	1.2	1.3								40.0
42.0						1.5	1.6																			42.0
44.0						1.1	1.2																			44.0
46.0																										46.0
48.0																										48.0
50.0																										50.0
52.0																										52.0
54.0																										54.0
56.0																										56.0
58.0																										58.0
60.0																										60.0
64.0																										64.0
1	92	92	92	92	92	0	0	0	0	0	92	92	92	92	92	46	46	46	46	46	92	92	92	92	92	1
2	92	92	92	92	92	46	46	46	46	46	92	92	92	92	92	92	92	92	92	92	92	92	92	92	92	2
3	92	92	92	92	92	92	92	92	92	92	92	92	92	92	92	92	92	92	92	92	92	92	92	92	92	3
4	92	92	92	92	92	92	92	92	92	92	92	92	92	92	92	92	92	92	92	92	92	92	92	92	92	4
5	0	0	0	0	0	92	92	92	92	92	46	46	46	46	46	92	92	92	92	92	92	92	92	92	92	5
6	0	0	0	0	0	92	92	92	92	92	0	0	0	0	0	46	46	46	46	46	0	0	0	0	0	6
ID	83	83	83	83	83	26	26	26	26	26	65	65	65	65	65	38	38	38	38	38	49	49	49	49	49	ID
[DEG]	43~84.7	45~84.7	49~84.7	63~84.7	79~84.7	35~84.7	36~84.7	51~84.7	63~84.7	78~84.7	48~84.7	49~84.7	50~84.7	63~84.7	78~84.7	46~84.7	47~84.7	48~84.7	63~84.7	79~84.7	49~84.7	50~84.7	51~84.7	63~84.7	79~84.7	[DEG]
	1	1	1	1	1	1	1	1	1	1	1	1	1	1	1	1	1	1	1	1	1	1	1	1	1	
	8.7t	8.7t	8.7t	8.7t	8.7t	8.7t	8.7t	8.7t	8.7t	8.7t	8.7t	8.7t	8.7t	8.7t	8.7t	8.7t	8.7t	8.7t	8.7t	8.7t	8.7t	8.7t	8.7t	8.7t	8.7t	

FLJ	1.6m + 7.4m	22.7 t	8.0m x 7.5m	360 °	JPN

m	52.3	52.3	52.3	52.3	52.3	52.3	52.3	52.3	52.3	52.3	56.0	56.0	56.0	56.0	56.0	60.0	60.0	60.0	60.0	60.0	m
°	5	15	30	45	60	5	15	30	45	60	5	15	30	45	60	5	15	30	45	60	°
3.0																					3.0
3.5																					3.5
4.0																					4.0
4.5																					4.5
5.0																					5.0
6.0																					6.0
7.0																					7.0
8.0																					8.0
9.0																					9.0
10.0	3.9					4.4															10.0
11.0	3.9					4.4					3.7										11.0
12.0	3.9	3.9				4.4	4.4				3.7										12.0
14.0	3.9	3.9	3.9			4.4	4.4	4.4			3.7	3.7	3.7			3.2	3.2				14.0
16.0	3.9	3.9	3.9	3.9	3.9	4.4	4.4	4.4	4.4	4.4	3.7	3.7	3.7	3.7	3.7	3.2	3.2	3.2	3.2		16.0
18.0	3.9	3.9	3.9	3.9	3.9	4.4	4.4	4.4	4.4	4.4	3.7	3.7	3.7	3.7	3.7	3.2	3.2	3.2	3.2	3.2	18.0
20.0	3.9	3.9	3.9	3.9		4.4	4.4	4.4	4.4		3.7	3.7	3.7	3.7		3.2	3.2	3.2	3.2	3.2	20.0
22.0	3.9	3.9	3.9	3.9		4.4	4.4	4.4	4.4		3.7	3.7	3.7	3.7		3.2	3.2	3.2	3.2		22.0
24.0	3.9	3.9	3.9	3.9		4.4	4.4	4.4	4.4		3.7	3.7	3.7	3.7		3.2	3.2	3.2	3.2		24.0
26.0	3.9	3.9	3.7	3.6		4.4	4.4	4.2	4.1		3.7	3.7	3.7	3.6		3.2	3.2	3.2	3.2		26.0
28.0	3.7	3.6	3.5	3.4		4.3	4.2	4.0	3.9		3.7	3.6	3.5	3.4		3.2	3.2	3.2	3.2		28.0
30.0	3.5	3.4	3.3	3.2		3.7	3.9	3.8	3.7		3.5	3.4	3.3	3.2		3.2	3.2	3.1	3.0		30.0
32.0	3.3	3.2	3.1			2.9	3.1	3.4			3.1	3.2	3.1	3.0		3.0	3.0	2.9	2.8		32.0
34.0	2.8	3.0	2.9			2.2	2.4	2.6			2.4	2.6	2.8			2.3	2.5	2.7	2.7		34.0
36.0	2.2	2.4	2.6			1.6	1.8	2.0			1.8	2.0	2.2			1.7	1.9	2.1			36.0
38.0	1.7	1.9	2.0			1.1	1.2	1.4			1.3	1.4	1.6			1.2	1.4	1.6			38.0
40.0	1.2	1.4	1.5					0.9				1.0	1.1				0.9	1.1			40.0
42.0		0.9	1.1																		42.0
44.0																					44.0
46.0																					46.0
48.0																					48.0
50.0																					50.0
52.0																					52.0
54.0																					54.0
56.0																					56.0
58.0																					58.0
60.0																					60.0
64.0																					64.0
% 1	46	46	46	46	46	92	92	92	92	92	92	92	92	92	92	100	100	100	100	100	1
% 2	92	92	92	92	92	92	92	92	92	92	92	92	92	92	92	100	100	100	100	100	2
% 3	92	92	92	92	92	92	92	92	92	92	92	92	92	92	92	100	100	100	100	100	3
% 4	92	92	92	92	92	92	92	92	92	92	92	92	92	92	92	100	100	100	100	100	4
% 5	92	92	92	92	92	92	92	92	92	92	92	92	92	92	92	100	100	100	100	100	5
% 6	92	92	92	92	92	46	46	46	46	46	92	92	92	92	92	100	100	100	100	100	6
ID	28	28	28	28	28	39	39	39	39	39	29	29	29	29	29	19	19	19	19	19	ID
[DEG]	50~84.7	49~84.7	50~84.7	66~84.7	78~84.7	53~84.7	54~84.7	52~84.7	66~84.7	78~84.7	56~84.7	55~84.7	56~84.7	66~84.7	79~84.7	59~84.7	58~84.7	59~84.7	66~84.7	79~84.7	[DEG]
	1	1	1	1	1	1	1	1	1	1	1	1	1	1	1	1	1	1	1	1	
	8.7t	8.7t	8.7t	8.7t	8.7t	8.7t	8.7t	8.7t	8.7t	8.7t	8.7t	8.7t	8.7t	8.7t	8.7t	8.7t	8.7t	8.7t	8.7t	8.7t	

FLJ	1.6m + 12.4m	22.7 t	8.0m x 7.5m	360 °	JPN

m	11.4	11.4	11.4	11.4	11.4	15.1	15.1	15.1	15.1	15.1	15.1	15.1	15.1	15.1	15.1	15.1	15.1	15.1	15.1	15.1	18.8	18.8	18.8	18.8	18.8	m
°	5	15	30	45	60	5	15	30	45	60	5	15	30	45	60	5	15	30	45	60	5	15	30	45	60	°
3.0	4.3																									3.0
3.5	4.3																									3.5
4.0	4.3					4.3					4.3					4.3					4.3					4.0
4.5	4.3					4.3					4.3					4.3					4.3					4.5
5.0	4.3					4.3					4.3					4.3					4.3					5.0
6.0	4.3	4.3				4.3	4.3				4.3	4.3				4.3	4.3				4.3					6.0
7.0	4.3	4.3				4.3	4.3				4.3	4.3				4.3	4.3				4.3	4.3				7.0
8.0	4.3	4.3				4.3	4.3				4.3	4.3				4.3	4.3				4.3	4.3				8.0
9.0	4.3	4.3	4.3			4.3	4.3	4.3			4.3	4.3	4.3			4.3	4.3	4.3			4.3	4.3				9.0
10.0	4.3	4.3	4.1			4.3	4.3	4.3			4.3	4.3	4.3			4.3	4.3	4.3			4.3	4.3	4.3			10.0
11.0	4.3	4.3	3.9	3.2		4.3	4.3	4.1	3.3		4.3	4.3	4.1	3.3		4.3	4.3	4.1	3.3		4.3	4.3	4.1			11.0
12.0	4.3	4.3	3.7	3.1		4.3	4.3	3.9	3.2		4.3	4.3	3.9	3.2		4.3	4.3	3.9	3.2		4.3	4.3	3.9	3.3		12.0
14.0	4.3	4.0	3.3	2.9		4.3	4.3	3.5	3.0		4.3	4.3	3.5	3.0		4.3	4.3	3.5	3.0		4.3	4.3	3.7	3.1		14.0
16.0	3.8	3.5	3.0	2.7		4.3	3.9	3.3	2.8		4.3	3.9	3.3	2.8		4.3	3.9	3.3	2.8		4.3	4.1	3.4	2.9		16.0
18.0	3.4	3.2	2.8			3.9	3.6	3.0	2.7		3.9	3.6	3.0	2.7		3.9	3.6	3.0	2.7		4.3	3.8	3.2	2.8		18.0
20.0	3.0	2.9				3.5	3.3	2.9			3.5	3.3	2.9			3.5	3.3	2.9			4.0	3.5	3.0	2.7		20.0
22.0	2.7					3.2	3.0				3.2	3.0				3.2	3.0				3.6	3.3	2.9			22.0
24.0						2.9	2.8				2.9	2.8				2.9	2.8				3.3	3.1	2.8			24.0
26.0																					3.0	2.9				26.0
28.0																					2.8					28.0
30.0																										30.0
32.0																										32.0
34.0																										34.0
36.0																										36.0
38.0																										38.0
40.0																										40.0
42.0																										42.0
44.0																										44.0
46.0																										46.0
48.0																										48.0
50.0																										50.0
52.0																										52.0
54.0																										54.0
56.0																										56.0
58.0																										58.0
60.0																										60.0
64.0																										64.0
% 1	0	0	0	0		0	0	0	0		0	0	0	0		0	0	0	0		0	0	0	0		1
% 2	0	0	0	0		0	0	0	0		0	0	0	0		46	46	46	46		0	0	0	0		2
% 3	0	0	0	0		0	0	0	0		46	46	46	46		0	0	0	0		0	0	0	0		3
% 4	0	0	0	0		46	46	46	46		0	0	0	0		0	0	0	0		0	0	0	0		4
% 5	0	0	0	0		0	0	0	0		0	0	0	0		0	0	0	0		46	46	46	46		5
% 6	0	0	0	0		0	0	0	0		0	0	0	0		0	0	0	0		46	46	46	46		6
ID	1	1	1	1		76	76	76	76		105	105	105	105		131	131	131	131		30	30	30	30		ID
[DEG]	0~84.7	0~84.7	0~84.7	0~84.7		29~84.7	32~84.7	51~84.7	60~84.7		29~84.7	31~84.7	51~84.7	60~84.7		29~84.7	31~84.7	51~84.7	60~84.7		26~84.7	37~84.7	46~84.7	60~84.7		[DEG]
	1	1	1	1		1	1	1	1		1	1	1	1		1	1	1	1		1	1	1	1		
	8.7t	8.7t	8.7t	8.7t		8.7t	8.7t	8.7t	8.7t		8.7t	8.7t	8.7t	8.7t		8.7t	8.7t	8.7t	8.7t		8.7t	8.7t	8.7t	8.7t		

フルオートラフィングジブ

FLJ	1.6m + 12.4m	22.7 t	8.0m x 7.5m	360 °	JPN

m	18.8	18.8	18.8	18.8	18.8	18.8	18.8	18.8	18.8	18.8	18.8	18.8	18.8	18.8	18.8	22.6	22.6	22.6	22.6	22.6	26.3	26.3	26.3	26.3	26.3	m
°	5	15	30	45	60	5	15	30	45	60	5	15	30	45	60	5	15	30	45	60	5	15	30	45	60	°
3.0																										3.0
3.5																										3.5
4.0	4.3					4.3					4.3															4.0
4.5	4.3					4.3					4.3															4.5
5.0	4.3					4.3					4.3					4.3										5.0
6.0	4.3					4.3					4.3					4.3					4.3					6.0
7.0	4.3	4.3				4.3	4.3				4.3	4.3				4.3	4.3				4.3					7.0
8.0	4.3	4.3				4.3	4.3				4.3	4.3				4.3	4.3				4.3	4.3				8.0
9.0	4.3	4.3				4.3	4.3				4.3	4.3				4.3	4.3				4.3	4.3				9.0
10.0	4.3	4.3	4.3			4.3	4.3	4.3			4.3	4.3	4.3			4.3	4.3				4.3	4.3				10.0
11.0	4.3	4.3	4.1			4.3	4.3	4.2			4.3	4.3	4.2			4.3	4.3	4.1			4.3	4.3	4.3			11.0
12.0	4.3	4.3	4.0	3.3		4.3	4.3	4.0	3.3		4.3	4.3	4.0	3.3		4.3	4.3	4.0			4.3	4.3	4.2			12.0
14.0	4.3	4.3	3.7	3.1		4.3	4.3	3.7	3.1		4.3	4.3	3.7	3.1		4.3	4.3	3.7	3.1		4.3	4.3	3.9	3.2	2.7	14.0
16.0	4.3	4.1	3.5	2.9		4.3	4.2	3.5	2.9		4.3	4.2	3.5	2.9		4.3	4.2	3.5	3.0		4.3	4.3	3.7	3.0	2.6	16.0
18.0	4.3	3.8	3.2	2.8		4.3	3.8	3.2	2.8		4.3	3.9	3.2	2.8		4.3	3.9	3.3	2.9		4.3	4.2	3.5	2.9		18.0
20.0	4.0	3.6	3.0	2.7		4.0	3.6	3.0	2.7		4.0	3.6	3.0	2.7		4.2	3.7	3.1	2.8		4.3	4.0	3.3	2.8		20.0
22.0	3.6	3.3	2.9			3.6	3.3	2.9			3.6	3.3	2.9			3.9	3.4	3.0			4.3	3.7	3.2	2.7		22.0
24.0	3.3	3.1	2.8			3.3	3.1	2.8			3.3	3.1	2.8			3.6	3.3	2.9			4.0	3.5	3.0			24.0
26.0	3.0	2.9				3.0	2.9				3.0	2.9				3.4	3.1	2.8			3.8	3.3	2.9			26.0
28.0	2.8					2.8					2.8					3.2	3.0				3.5	3.2	2.8			28.0
30.0																2.9	2.8				3.3	3.0				30.0
32.0																2.7					3.1	2.9				32.0
34.0																					2.5	2.7				34.0
36.0																					1.9					36.0
38.0																										38.0
40.0																										40.0
42.0																										42.0
44.0																										44.0
46.0																										46.0
48.0																										48.0
50.0																										50.0
52.0																										52.0
54.0																										54.0
56.0																										56.0
58.0																										58.0
60.0																										60.0
64.0																										64.0
1	0	0	0	0		0	0	0	0		0	0	0	0		0	0	0	0		92	92	92	92	92	1
2	0	0	0	0		0	0	0	0		46	46	46	46		0	0	0	0		92	92	92	92	92	2
3	0	0	0	0		46	46	46	46		46	46	46	46		0	0	0	0		0	0	0	0	0	3
4	46	46	46	46		46	46	46	46		0	0	0	0		0	0	0	0		0	0	0	0	0	4
5	46	46	46	46		0	0	0	0		0	0	0	0		46	46	46	46		0	0	0	0	0	5
6	0	0	0	0		0	0	0	0		0	0	0	0		92	92	92	92		0	0	0	0	0	6
ID	58	58	58	58		88	88	88	88		113	113	113	113		20	20	20	20		134	134	134	134	134	ID
[DEG]	26~84.7	37~84.7	46~84.7	60~84.7		26~84.7	37~84.7	46~84.7	60~84.7		26~84.7	37~84.7	46~84.7	60~84.7		24~84.7	34~84.7	49~84.7	65~84.7		21~84.7	31~84.7	50~84.7	64~84.7	77~84.7	[DEG]
	1	1	1	1		1	1	1	1		1	1	1	1		1	1	1	1		1	1	1	1	1	
	8.7t	8.7t	8.7t	8.7t		8.7t	8.7t	8.7t	8.7t		8.7t	8.7t	8.7t	8.7t		8.7t	8.7t	8.7t	8.7t		8.7t	8.7t	8.7t	8.7t	8.7t	

m	30.0	30.0	30.0	30.0	30.0	30.0	30.0	30.0	30.0	30.0	33.7	33.7	33.7	33.7	33.7	37.4	37.4	37.4	37.4	37.4	37.4	37.4	37.4	37.4	37.4	m
°	5	15	30	45	60	5	15	30	45	60	5	15	30	45	60	5	15	30	45	60	5	15	30	45	60	°
3.0																										3.0
3.5																										3.5
4.0																										4.0
4.5																										4.5
5.0																										5.0
6.0	4.0					4.3																				6.0
7.0	4.0					4.3					4.3					4.1										7.0
8.0	4.0					4.3					4.3					4.1					4.3					8.0
9.0	4.0	4.0				4.3	4.3				4.3	4.3				4.1					4.3					9.0
10.0	4.0	4.0				4.3	4.3				4.3	4.3				4.1	4.1				4.3	4.3				10.0
11.0	4.0	4.0				4.3	4.3	4.3			4.3	4.3				4.1	4.1				4.3	4.3				11.0
12.0	4.0	4.0	4.0			4.3	4.3	4.2			4.3	4.3	4.2			4.1	4.1				4.3	4.3				12.0
14.0	4.0	4.0	3.7	3.2		4.3	4.3	3.9	3.2		4.3	4.3	3.9	3.3		4.1	4.1	3.9			4.3	4.3	3.7			14.0
16.0	4.0	4.0	3.5	3.1		4.3	4.3	3.7	3.1		4.3	4.3	3.7	3.2	2.6	4.1	4.1	3.7	3.2	2.6	4.3	4.3	3.5	3.1		16.0
18.0	4.0	4.0	3.4	3.0		4.3	4.3	3.5	3.0		4.3	4.3	3.6	3.0	2.6	4.1	4.1	3.6	3.1	2.6	4.3	4.1	3.4	3.0		18.0
20.0	4.0	3.8	3.2	2.9		4.3	4.1	3.4	2.9		4.3	4.1	3.4	2.9		4.1	4.1	3.4	3.0		4.3	3.9	3.2	2.9		20.0
22.0	4.0	3.6	3.1	2.8		4.3	3.8	3.2	2.8		4.3	3.9	3.3	2.8		4.1	3.9	3.3	2.9		4.2	3.7	3.1	2.8		22.0
24.0	3.7	3.4	3.0	2.7		4.2	3.6	3.1	2.7		4.3	3.7	3.1	2.8		4.1	3.8	3.2	2.8		3.9	3.5	3.0	2.7		24.0
26.0	3.4	3.3	2.9			3.9	3.5	3.0			4.1	3.5	3.0	2.7		4.1	3.6	3.0	2.7		3.6	3.4	2.9	2.7		26.0
28.0	3.1	3.1	2.8			3.7	3.3	2.9			3.9	3.4	2.9			4.0	3.4	2.9	2.7		3.3	3.2	2.8	2.6		28.0
30.0	2.8	2.8	2.7			3.5	3.2	2.8			3.7	3.2	2.8			3.8	3.3	2.9			3.1	3.0	2.7			30.0
32.0	2.5	2.5	2.5			3.1	3.0	2.7			3.0	3.1	2.8			3.1	3.2	2.8			2.9	2.8	2.7			32.0
34.0	2.2	2.2				2.4	2.6				2.3	2.6	2.7			2.4	2.7	2.7			2.7	2.7	2.6			34.0
36.0		2.0				1.8	2.0				1.7	1.9				1.8	2.0	2.3			2.5	2.4	2.4			36.0
38.0						1.3					1.2	1.4				1.2	1.5				2.3	2.2				38.0
40.0												0.9					1.0				2.1	2.0				40.0
42.0																					1.9	1.9				42.0
44.0																										44.0
46.0																										46.0
48.0																										48.0
50.0																										50.0
52.0																										52.0
54.0																										54.0
56.0																										56.0
58.0																										58.0
60.0																										60.0
64.0																										64.0
1	0	0	0	0		92	92	92	92		92	92	92	92	92	92	92	92	92	92	0	0	0	0		1
2	0	0	0	0		92	92	92	92		92	92	92	92	92	92	92	92	92	92	0	0	0	0		2
3	0	0	0	0		46	46	46	46		92	92	92	92	92	92	92	92	92	92	46	46	46	46		3
4	46	46	46	46		0	0	0	0		0	0	0	0	0	46	46	46	46	46	92	92	92	92		4
5	92	92	92	92		0	0	0	0		0	0	0	0	0	0	0	0	0	0	92	92	92	92		5
6	92	92	92	92		0	0	0	0		0	0	0	0	0	0	0	0	0	0	92	92	92	92		6
ID	22	22	22	22		116	116	116	116		110	110	110	110	110	93	93	93	93	93	24	24	24	24		ID
[DEG]	39~84.7	36~84.7	47~84.7	64~84.7		27~84.7	35~84.7	47~84.7	64~84.7		36~84.7	33~84.7	49~84.7	64~84.7	77~84.7	42~84.7	40~84.7	50~84.7	64~84.7	79~84.7	35~84.7	37~84.7	50~84.7	64~84.7		[DEG]
	1	1	1	1		1	1	1	1		1	1	1	1	1	1	1	1	1	1	1	1	1	1		
	8.7t	8.7t	8.7t	8.7t		8.7t	8.7t	8.7t	8.7t		8.7t	8.7t	8.7t	8.7t	8.7t	8.7t	8.7t	8.7t	8.7t	8.7t	8.7t	8.7t	8.7t	8.7t		

FLJ	1.6m + 12.4m	22.7 t	8.0m x 7.5m	360 °	JPN

m	41.2	41.2	41.2	41.2	41.2	44.9	44.9	44.9	44.9	44.9	44.9	44.9	44.9	44.9	44.9	48.6	48.6	48.6	48.6	48.6	48.6	48.6	48.6	48.6	48.6	m
°	5	15	30	45	60	5	15	30	45	60	5	15	30	45	60	5	15	30	45	60	5	15	30	45	60	°
3.0																										3.0
3.5																										3.5
4.0																										4.0
4.5																										4.5
5.0																										5.0
6.0																										6.0
7.0																										7.0
8.0	4.3																									8.0
9.0	4.3										4.0															9.0
10.0	4.3					3.0					4.0					3.2					3.6					10.0
11.0	4.3	4.3				3.0					4.0	4.0				3.2					3.6					11.0
12.0	4.3	4.3				3.0	3.0				4.0	4.0				3.2	3.2				3.6	3.6				12.0
14.0	4.3	4.3	3.9			3.0	3.0				4.0	4.0				3.2	3.2				3.6	3.6				14.0
16.0	4.3	4.3	3.7	3.2		3.0	3.0	3.0			4.0	4.0	3.7			3.2	3.2	3.2			3.6	3.6	3.6			16.0
18.0	4.3	4.3	3.5	3.1	2.6	3.0	3.0	3.0	2.9		4.0	4.0	3.5	3.0	2.6	3.2	3.2	3.2	3.0		3.6	3.6	3.5	3.0		18.0
20.0	4.3	4.1	3.4	3.0	2.6	3.0	3.0	3.0	2.9		4.0	4.0	3.4	2.9	2.6	3.2	3.2	3.2	2.9	2.6	3.6	3.6	3.3	2.9	2.6	20.0
22.0	4.3	4.0	3.3	2.9		3.0	3.0	3.0	2.8		4.0	3.9	3.2	2.9		3.2	3.2	3.2	2.8	2.5	3.6	3.6	3.2	2.8	2.5	22.0
24.0	4.3	3.8	3.2	2.8		3.0	3.0	3.0	2.7		4.0	3.7	3.1	2.8		3.2	3.2	3.1	2.7		3.6	3.6	3.1	2.8		24.0
26.0	4.2	3.6	3.0	2.7		3.0	3.0	2.9	2.6		4.0	3.6	3.0	2.7		3.2	3.2	3.0	2.7		3.6	3.5	3.0	2.7		26.0
28.0	4.0	3.5	2.9	2.7		3.0	3.0	2.8	2.6		4.0	3.5	2.9	2.7		3.2	3.2	2.9	2.6		3.6	3.4	2.9	2.6		28.0
30.0	3.8	3.3	2.9	2.6		3.0	3.0	2.7	2.5		3.8	3.3	2.9	2.6		3.2	3.2	2.8	2.6		3.6	3.3	2.8	2.6		30.0
32.0	3.1	3.2	2.8			3.0	2.9	2.7	2.5		3.3	3.2	2.8	2.6		3.2	3.1	2.7	2.5		3.4	3.2	2.8	2.5		32.0
34.0	2.4	2.7	2.7			2.8	2.7	2.6			2.6	2.9	2.7			3.2	3.0	2.6	2.5		2.7	3.0	2.7	2.5		34.0
36.0	1.8	2.1	2.4			2.7	2.6	2.5			2.0	2.2	2.6			2.7	2.9	2.6			2.1	2.4	2.6			36.0
38.0	1.3	1.5	1.8			2.5	2.4	2.4			1.4	1.7	2.0			2.2	2.4	2.5			1.5	1.8	2.1			38.0
40.0		1.0	1.3			2.3	2.3	2.3			1.0	1.2	1.4			1.7	1.9	2.2			1.1	1.3	1.6			40.0
42.0						2.1	2.1	2.1					0.9			1.3	1.4	1.7				0.9	1.1			42.0
44.0						1.7	1.8									0.9	1.0	1.2								44.0
46.0						1.3	1.4																			46.0
48.0						1.0	1.1																			48.0
50.0																										50.0
52.0																										52.0
54.0																										54.0
56.0																										56.0
58.0																										58.0
60.0																										60.0
64.0																										64.0
% 1	92	92	92	92	92	0	0	0	0		92	92	92	92	92	46	46	46	46	46	92	92	92	92	92	1
% 2	92	92	92	92	92	46	46	46	46		92	92	92	92	92	92	92	92	92	92	92	92	92	92	92	2
% 3	92	92	92	92	92	92	92	92	92		92	92	92	92	92	92	92	92	92	92	92	92	92	92	92	3
% 4	92	92	92	92	92	92	92	92	92		92	92	92	92	92	92	92	92	92	92	92	92	92	92	92	4
% 5	0	0	0	0	0	92	92	92	92		46	46	46	46	46	92	92	92	92	92	92	92	92	92	92	5
% 6	0	0	0	0	0	92	92	92	92		0	0	0	0	0	46	46	46	46	46	0	0	0	0	0	6
ID	83	83	83	83	83	26	26	26	26		65	65	65	65	65	38	38	38	38	38	49	49	49	49	49	ID
[DEG]	47~84.7	46~84.7	48~84.7	64~84.7	78~84.7	36~84.7	38~84.7	50~84.7	64~84.7		48~84.7	50~84.7	49~84.7	64~84.7	79~84.7	47~84.7	48~84.7	50~84.7	64~84.7	78~84.7	52~84.7	51~84.7	53~84.7	64~84.7	78~84.7	[DEG]
	1	1	1	1	1	1	1	1	1		1	1	1	1	1	1	1	1	1	1	1	1	1	1	1	
	8.7t	8.7t	8.7t	8.7t	8.7t	8.7t	8.7t	8.7t	8.7t		8.7t	8.7t	8.7t	8.7t	8.7t	8.7t	8.7t	8.7t	8.7t	8.7t	8.7t	8.7t	8.7t	8.7t	8.7t	

m	52.3	52.3	52.3	52.3	52.3	52.3	52.3	52.3	52.3	52.3	56.0	56.0	56.0	56.0	56.0	60.0	60.0	60.0	60.0	60.0						m
°	5	15	30	45	60	5	15	30	45	60	5	15	30	45	60	5	15	30	45	60						°
3.0																										3.0
3.5																										3.5
4.0																										4.0
4.5																										4.5
5.0																										5.0
6.0																										6.0
7.0																										7.0
8.0																										8.0
9.0																										9.0
10.0																										10.0
11.0	2.7					3.0																				11.0
12.0	2.7					3.0					2.6															12.0
14.0	2.7	2.7				3.0	3.0				2.6	2.6				1.9										14.0
16.0	2.7	2.7	2.7			3.0	3.0	3.0			2.6	2.6				1.9	1.9									16.0
18.0	2.7	2.7	2.7			3.0	3.0	3.0			2.6	2.6	2.6			1.9	1.9	1.9								18.0
20.0	2.7	2.7	2.7	2.7	2.6	3.0	3.0	3.0	2.9	2.6	2.6	2.6	2.6	2.6		1.9	1.9	1.9	1.9							20.0
22.0	2.7	2.7	2.7	2.7	2.5	3.0	3.0	3.0	2.8	2.5	2.6	2.6	2.6	2.6	2.5	1.9	1.9	1.9	1.9	1.9						22.0
24.0	2.7	2.7	2.7	2.7		3.0	3.0	3.0	2.7		2.6	2.6	2.6	2.6	2.5	1.9	1.9	1.9	1.9	1.9						24.0
26.0	2.7	2.7	2.7	2.6		3.0	3.0	3.0	2.7		2.6	2.6	2.6	2.6		1.9	1.9	1.9	1.9							26.0
28.0	2.7	2.7	2.7	2.6		3.0	3.0	2.9	2.6		2.6	2.6	2.6	2.6		1.9	1.9	1.9	1.9							28.0
30.0	2.7	2.7	2.7	2.5		3.0	3.0	2.8	2.5		2.6	2.6	2.6	2.5		1.9	1.9	1.9	1.9							30.0
32.0	2.7	2.7	2.7	2.5		3.0	3.0	2.7	2.5		2.6	2.6	2.6	2.5		1.9	1.9	1.9	1.9							32.0
34.0	2.7	2.7	2.6	2.4		2.9	3.0	2.6	2.5		2.6	2.6	2.6	2.4		1.9	1.9	1.9	1.9							34.0
36.0	2.7	2.6	2.5	2.4		2.3	2.6	2.6	2.4		2.4	2.6	2.5	2.4		1.9	1.9	1.9	1.9							36.0
38.0	2.3	2.5	2.4			1.7	2.0	2.3			1.9	2.1	2.4	2.3		1.8	1.9	1.9	1.9							38.0
40.0	1.8	2.0	2.3			1.2	1.5	1.8			1.4	1.6	1.9			1.3	1.6	1.9	1.9							40.0
42.0	1.4	1.6	1.8				1.0	1.3			1.0	1.2	1.5			0.9	1.1	1.4								42.0
44.0	1.0	1.2	1.4					0.9					1.0					1.0								44.0
46.0			1.0																							46.0
48.0																										48.0
50.0																										50.0
52.0																										52.0
54.0																										54.0
56.0																										56.0
58.0																										58.0
60.0																										60.0
64.0																										64.0
% 1	46	46	46	46	46	92	92	92	92	92	92	92	92	92	92	100	100	100	100	100						1
% 2	92	92	92	92	92	92	92	92	92	92	92	92	92	92	92	100	100	100	100	100						2
% 3	92	92	92	92	92	92	92	92	92	92	92	92	92	92	92	100	100	100	100	100						3
% 4	92	92	92	92	92	92	92	92	92	92	92	92	92	92	92	100	100	100	100	100						4
% 5	92	92	92	92	92	92	92	92	92	92	92	92	92	92	92	100	100	100	100	100						5
% 6	92	92	92	92	92	46	46	46	46	46	92	92	92	92	92	100	100	100	100	100						6
ID	28	28	28	28	28	39	39	39	39	39	29	29	29	29	29	19	19	19	19	19						ID
[DEG]	51~84.7	52~84.7	51~84.7	65~84.7	79~84.7	55~84.7	54~84.7	54~84.7	65~84.7	79~84.7	56~84.7	57~84.7	57~84.7	65~84.7	79~84.7	59~84.7	60~84.7	60~84.7	65~84.7	79~84.7						[DEG]
	1	1	1	1	1	1	1	1	1	1	1	1	1	1	1	1	1	1	1	1						
	8.7t	8.7t	8.7t	8.7t	8.7t	8.7t	8.7t	8.7t	8.7t	8.7t	8.7t	8.7t	8.7t	8.7t	8.7t	8.7t	8.7t	8.7t	8.7t	8.7t						

フルオートラフィングジブ

FLJ	1.6m + 17.4m	22.7 t	8.0m x 7.5m	360 °	JPN

m	11.4	11.4	11.4	11.4	11.4	15.1	15.1	15.1	15.1	15.1	15.1	15.1	15.1	15.1	15.1	15.1	15.1	15.1	15.1	15.1	18.8	18.8	18.8	18.8	18.8	m
°	5	15	30	45	60	5	15	30	45	60	5	15	30	45	60	5	15	30	45	60	5	15	30	45	60	°
m 3.0																										3.0
3.5																										3.5
4.0																										4.0
4.5	3.3																									4.5
5.0	3.3					3.1					3.3					3.3										5.0
6.0	3.3					3.1					3.3					3.3					2.7					6.0
7.0	3.3					3.1					3.3					3.3					2.7					7.0
8.0	3.3	3.3				3.1					3.3					3.3					2.7					8.0
9.0	3.3	3.3				3.1	3.1				3.3	3.3				3.3	3.3				2.7	2.7				9.0
10.0	3.3	3.2				3.1	3.1				3.3	3.3				3.3	3.3				2.7	2.7				10.0
11.0	3.3	3.0				3.1	3.1				3.3	3.1				3.3	3.1				2.7	2.7				11.0
12.0	3.2	2.9	2.5			3.1	2.9				3.3	2.9				3.3	3.0				2.7	2.7				12.0
14.0	2.9	2.6	2.3			3.1	2.7	2.3			3.1	2.7	2.3			3.1	2.7	2.3			2.7	2.7	2.3			14.0
16.0	2.6	2.4	2.1	1.8		2.8	2.5	2.2	1.9		2.8	2.5	2.2	1.9		2.8	2.5	2.2	1.9		2.7	2.5	2.2			16.0
18.0	2.4	2.2	1.9	1.7		2.6	2.3	2.0	1.8		2.6	2.3	2.0	1.8		2.6	2.3	2.0	1.8		2.7	2.4	2.0	1.8		18.0
20.0	2.2	2.0	1.8	1.6		2.4	2.1	1.9	1.7		2.4	2.1	1.9	1.7		2.4	2.1	1.9	1.7		2.5	2.2	1.9	1.7		20.0
22.0	2.0	1.9	1.7			2.2	2.0	1.8	1.6		2.2	2.0	1.8	1.6		2.2	2.0	1.8	1.6		2.3	2.1	1.8	1.6		22.0
24.0	1.8	1.7				2.1	1.9	1.7			2.1	1.9	1.7			2.1	1.9	1.7			2.2	2.0	1.8	1.6		24.0
26.0	1.7	1.6				1.9	1.8	1.6			1.9	1.8	1.6			1.9	1.8	1.6			2.0	1.9	1.7			26.0
28.0						1.8	1.6				1.8	1.6				1.8	1.6				1.9	1.8	1.6			28.0
30.0						1.6					1.6					1.6					1.9	1.7				30.0
32.0																					1.7	1.6				32.0
34.0																					1.6					34.0
36.0																										36.0
38.0																										38.0
40.0																										40.0
42.0																										42.0
44.0																										44.0
46.0																										46.0
48.0																										48.0
50.0																										50.0
52.0																										52.0
54.0																										54.0
56.0																										56.0
58.0																										58.0
60.0																										60.0
64.0																										64.0
% 1	0	0	0	0		0	0	0	0		0	0	0	0		0	0	0	0		0	0	0	0		1
2	0	0	0	0		0	0	0	0		0	0	0	0		46	46	46	46		0	0	0	0		2
3	0	0	0	0		0	0	0	0		46	46	46	46		0	0	0	0		0	0	0	0		3
4	0	0	0	0		46	46	46	46		0	0	0	0		0	0	0	0		0	0	0	0		4
5	0	0	0	0		0	0	0	0		0	0	0	0		0	0	0	0		46	46	46	46		5
6	0	0	0	0		0	0	0	0		0	0	0	0		0	0	0	0		46	46	46	46		6
ID	1	1	1	1		76	76	76	76		105	105	105	105		131	131	131	131		30	30	30	30		ID
[DEG]	0~84.7	0~84.7	0~84.7	0~84.7		23~84.7	36~84.7	47~84.7	63~84.7		23~84.7	36~84.7	47~84.7	63~84.7		23~84.7	36~84.7	47~84.7	63~84.7		21~84.7	33~84.7	49~84.7	63~84.7		[DEG]
	1	1	1	1		1	1	1	1		1	1	1	1		1	1	1	1		1	1	1	1		
	8.7t	8.7t	8.7t	8.7t		8.7t	8.7t	8.7t	8.7t		8.7t	8.7t	8.7t	8.7t		8.7t	8.7t	8.7t	8.7t		8.7t	8.7t	8.7t	8.7t		

m	18.8	18.8	18.8	18.8	18.8	18.8	18.8	18.8	18.8	18.8	18.8	18.8	18.8	18.8	18.8	22.6	22.6	22.6	22.6	22.6	26.3	26.3	26.3	26.3	26.3	m
°	5	15	30	45	60	5	15	30	45	60	5	15	30	45	60	5	15	30	45	60	5	15	30	45	60	°
m 3.0																										3.0
3.5																										3.5
4.0																										4.0
4.5																										4.5
5.0																										5.0
6.0	2.9					3.2					3.3					2.5										6.0
7.0	2.9					3.2					3.3					2.5					3.3					7.0
8.0	2.9					3.2					3.3					2.5					3.3					8.0
9.0	2.9	2.9				3.2	3.2				3.3	3.3				2.5					3.3					9.0
10.0	2.9	2.9				3.2	3.2				3.3	3.3				2.5	2.5				3.3	3.3				10.0
11.0	2.9	2.9				3.2	3.2				3.3	3.2				2.5	2.5				3.3	3.3				11.0
12.0	2.9	2.9				3.2	3.0				3.3	3.0				2.5	2.5				3.3	3.2				12.0
14.0	2.9	2.8	2.3			3.2	2.8	2.3			3.2	2.8	2.3			2.5	2.5	2.3			3.3	2.9	2.4			14.0
16.0	2.9	2.5	2.2	1.9		2.9	2.6	2.2	1.9		3.0	2.6	2.2	1.9		2.5	2.5	2.2			3.2	2.7	2.2			16.0
18.0	2.7	2.4	2.1	1.8		2.7	2.4	2.1	1.8		2.7	2.4	2.1	1.8		2.5	2.4	2.1	1.8		3.0	2.5	2.1	1.9		18.0
20.0	2.5	2.2	1.9	1.7		2.5	2.2	1.9	1.7		2.5	2.2	2.0	1.7		2.5	2.3	1.9	1.7		2.8	2.4	2.0	1.8		20.0
22.0	2.3	2.1	1.9	1.6		2.3	2.1	1.9	1.6		2.4	2.1	1.9	1.6		2.4	2.1	1.9	1.7		2.6	2.3	1.9	1.7		22.0
24.0	2.2	2.0	1.8	1.6		2.2	2.0	1.8	1.6		2.2	2.0	1.8	1.6		2.3	2.0	1.8	1.6		2.4	2.1	1.9	1.6		24.0
26.0	2.1	1.9	1.7			2.1	1.9	1.7			2.1	1.9	1.7			2.1	1.9	1.7	1.5		2.3	2.0	1.8	1.6		26.0
28.0	1.9	1.8	1.6			2.0	1.8	1.6			2.0	1.8	1.6			2.0	1.8	1.7			2.2	1.9	1.7	1.5		28.0
30.0	1.9	1.7				1.9	1.7				1.9	1.7				1.9	1.8	1.6			2.1	1.9	1.7			30.0
32.0	1.7	1.6				1.7	1.6				1.7	1.6				1.8	1.7				2.0	1.8	1.6			32.0
34.0	1.6					1.6					1.6					1.8	1.6				1.9	1.7	1.6			34.0
36.0																1.7					1.8	1.7				36.0
38.0																					1.7	1.6				38.0
40.0																					1.6					40.0
42.0																										42.0
44.0																										44.0
46.0																										46.0
48.0																										48.0
50.0																										50.0
52.0																										52.0
54.0																										54.0
56.0																										56.0
58.0																										58.0
60.0																										60.0
64.0																										64.0
% 1	0	0	0	0		0	0	0	0		0	0	0	0		0	0	0	0		92	92	92	92		1
2	0	0	0	0		0	0	0	0		46	46	46	46		0	0	0	0		92	92	92	92		2
3	0	0	0	0		46	46	46	46		46	46	46	46		0	0	0	0		0	0	0	0		3
4	46	46	46	46		46	46	46	46		0	0	0	0		0	0	0	0		0	0	0	0		4
5	46	46	46	46		0	0	0	0		0	0	0	0		46	46	46	46		0	0	0	0		5
6	0	0	0	0		0	0	0	0		0	0	0	0		92	92	92	92		0	0	0	0		6
ID	58	58	58	58		88	88	88	88		113	113	113	113		20	20	20	20		134	134	134	134		ID
[DEG]	21~84.7	32~84.7	49~84.7	63~84.7		21~84.7	32~84.7	49~84.7	63~84.7		21~84.7	32~84.7	49~84.7	63~84.7		28~84.7	37~84.7	51~84.7	63~84.7		26~84.7	34~84.7	47~84.7	62~84.7		[DEG]
	1	1	1	1		1	1	1	1		1	1	1	1		1	1	1	1		1	1	1	1		
	8.7t	8.7t	8.7t	8.7t		8.7t	8.7t	8.7t	8.7t		8.7t	8.7t	8.7t	8.7t		8.7t	8.7t	8.7t	8.7t		8.7t	8.7t	8.7t	8.7t		

FLJ	1.6m + 17.4m	22.7 t	8.0m x 7.5m	360 °	JPN

m	30.0	30.0	30.0	30.0	30.0	30.0	30.0	30.0	30.0	30.0	33.7	33.7	33.7	33.7	33.7	37.4	37.4	37.4	37.4	37.4	37.4	37.4	37.4	37.4	37.4	m
°	5	15	30	45	60	5	15	30	45	60	5	15	30	45	60	5	15	30	45	60	5	15	30	45	60	°
3.0																										3.0
3.5																										3.5
4.0																										4.0
4.5																										4.5
5.0																										5.0
6.0																										6.0
7.0																										7.0
8.0	2.3					3.2					3.1															8.0
9.0	2.3					3.2					3.1					2.4					2.5					9.0
10.0	2.3					3.2					3.1					2.4					2.5					10.0
11.0	2.3	2.3				3.2	3.2				3.1					2.4					2.5					11.0
12.0	2.3	2.3				3.2	3.2				3.1	3.1				2.4	2.4				2.5					12.0
14.0	2.3	2.3				3.2	2.9				3.1	3.0				2.4	2.4				2.5	2.5				14.0
16.0	2.3	2.3	2.2			3.2	2.8	2.3			3.1	2.8	2.3			2.4	2.4	2.2			2.5	2.5				16.0
18.0	2.3	2.3	2.1			3.1	2.6	2.2	1.9		3.1	2.6	2.2			2.4	2.4	2.2			2.5	2.5	2.1			18.0
20.0	2.3	2.3	2.0	1.8		2.9	2.4	2.1	1.8	1.5	2.9	2.5	2.1	1.8		2.4	2.4	2.1	1.8		2.5	2.4	2.0	1.8		20.0
22.0	2.3	2.2	1.9	1.7		2.7	2.3	2.0	1.7	1.5	2.7	2.3	2.0	1.8		2.4	2.4	2.0	1.8	1.5	2.5	2.2	1.9	1.7	1.5	22.0
24.0	2.3	2.1	1.8	1.7		2.5	2.2	1.9	1.7		2.6	2.2	1.9	1.7		2.4	2.2	1.9	1.7	1.5	2.5	2.1	1.8	1.7	1.5	24.0
26.0	2.3	2.0	1.8	1.6		2.4	2.1	1.8	1.6		2.4	2.1	1.8	1.6		2.4	2.2	1.8	1.7		2.4	2.1	1.8	1.6		26.0
28.0	2.2	1.9	1.7	1.6		2.3	2.0	1.8	1.6		2.3	2.0	1.8	1.6		2.4	2.1	1.8	1.6		2.2	2.0	1.7	1.6		28.0
30.0	2.1	1.8	1.6	1.5		2.2	1.9	1.7	1.5		2.2	1.9	1.7	1.5		2.3	2.0	1.7	1.6		2.1	1.9	1.7	1.5		30.0
32.0	2.0	1.8	1.6			2.1	1.8	1.6			2.1	1.9	1.7	1.5		2.2	1.9	1.7	1.5		2.1	1.8	1.6	1.5		32.0
34.0	1.9	1.7	1.6			2.0	1.8	1.6			2.0	1.8	1.6			2.1	1.8	1.6	1.5		2.0	1.8	1.6	1.5		34.0
36.0		1.7	1.5			1.9	1.7	1.6			1.9	1.8	1.6			2.0	1.8	1.6			1.9	1.7	1.5			36.0
38.0		1.6				1.8	1.7				1.9	1.7	1.6			1.9	1.7	1.6			1.8	1.7	1.5			38.0
40.0		1.6				1.6	1.6					1.7				1.5	1.7	1.5			1.8	1.6	1.5			40.0
42.0		1.5				1.2	1.4					1.3				1.1	1.3	1.5			1.7	1.6	1.4			42.0
44.0												0.9					0.9					1.5				44.0
46.0																						1.5				46.0
48.0																						1.5				48.0
50.0																										50.0
52.0																										52.0
54.0																										54.0
56.0																										56.0
58.0																										58.0
60.0																										60.0
64.0																										64.0
1	0	0	0	0		92	92	92	92	92	92	92	92	92		92	92	92	92	92	0	0	0	0	0	1
2	0	0	0	0		92	92	92	92	92	92	92	92	92		92	92	92	92	92	0	0	0	0	0	2
3	0	0	0	0		46	46	46	46	46	92	92	92	92		92	92	92	92	92	46	46	46	46	46	3
4	46	46	46	46		0	0	0	0	0	0	0	0	0		46	46	46	46	46	92	92	92	92	92	4
5	92	92	92	92		0	0	0	0	0	0	0	0	0		0	0	0	0	0	92	92	92	92	92	5
6	92	92	92	92		0	0	0	0	0	0	0	0	0		0	0	0	0	0	92	92	92	92	92	6
ID	22	22	22	22		116	116	116	116	116	110	110	110	110		93	93	93	93	93	24	24	24	24	24	ID
[DEG]	48~84.7	33~84.7	49~84.7	63~84.7		30~84.7	32~84.7	49~84.7	62~84.7	77~84.7	45~84.7	35~84.7	50~84.7	62~84.7		43~84.7	42~84.7	48~84.7	62~84.7	77~84.7	44~84.7	35~84.7	48~84.7	63~84.7	78~84.7	[DEG]
	1	1	1	1		1	1	1	1	1	1	1	1	1		1	1	1	1	1	1	1	1	1	1	
	8.7t	8.7t	8.7t	8.7t		8.7t	8.7t	8.7t	8.7t	8.7t	8.7t	8.7t	8.7t	8.7t		8.7t	8.7t	8.7t	8.7t	8.7t	8.7t	8.7t	8.7t	8.7t	8.7t	

m	41.2	41.2	41.2	41.2	41.2	44.9	44.9	44.9	44.9	44.9	44.9	44.9	44.9	44.9	44.9	48.6	48.6	48.6	48.6	48.6	48.6	48.6	48.6	48.6	48.6	m
°	5	15	30	45	60	5	15	30	45	60	5	15	30	45	60	5	15	30	45	60	5	15	30	45	60	°
3.0																										3.0
3.5																										3.5
4.0																										4.0
4.5																										4.5
5.0																										5.0
6.0																										6.0
7.0																										7.0
8.0																										8.0
9.0																										9.0
10.0	2.7										2.4															10.0
11.0	2.7					1.9					2.4					2.0					2.2					11.0
12.0	2.7					1.9					2.4					2.0					2.2					12.0
14.0	2.7	2.7				1.9	1.9				2.4	2.4				2.0	2.0				2.2	2.2				14.0
16.0	2.7	2.7				1.9	1.9				2.4	2.4				2.0	2.0				2.2	2.2				16.0
18.0	2.7	2.6	2.1			1.9	1.9	1.9			2.4	2.4	2.1			2.0	2.0				2.2	2.2				18.0
20.0	2.7	2.5	2.1	1.8		1.9	1.9	1.9			2.4	2.4	2.0			2.0	2.0	2.0			2.2	2.2	2.0			20.0
22.0	2.7	2.4	2.0	1.8	1.5	1.9	1.9	1.9	1.7		2.4	2.4	2.0	1.7		2.0	2.0	1.9	1.7		2.2	2.2	1.9	1.7		22.0
24.0	2.6	2.3	1.9	1.7	1.5	1.9	1.9	1.8	1.7	1.5	2.4	2.2	1.9	1.7	1.5	2.0	2.0	1.9	1.7	1.5	2.2	2.2	1.9	1.7	1.5	24.0
26.0	2.5	2.2	1.8	1.7		1.9	1.9	1.8	1.6	1.5	2.4	2.2	1.8	1.7	1.5	2.0	2.0	1.8	1.6	1.5	2.2	2.1	1.8	1.6	1.5	26.0
28.0	2.4	2.1	1.8	1.6		1.9	1.9	1.7	1.6		2.4	2.1	1.8	1.6		2.0	2.0	1.7	1.6		2.2	2.1	1.8	1.6		28.0
30.0	2.3	2.0	1.7	1.6		1.9	1.9	1.7	1.5		2.3	2.0	1.7	1.6		2.0	2.0	1.7	1.6		2.2	2.0	1.7	1.6		30.0
32.0	2.2	1.9	1.7	1.6		1.9	1.9	1.6	1.5		2.2	1.9	1.7	1.5		2.0	1.9	1.6	1.5		2.2	1.9	1.7	1.5		32.0
34.0	2.1	1.9	1.6	1.5		1.9	1.8	1.6	1.5		2.1	1.9	1.6	1.5		2.0	1.8	1.6	1.5		2.1	1.9	1.6	1.5		34.0
36.0	2.0	1.8	1.6	1.5		1.9	1.7	1.5	1.5		2.0	1.8	1.6	1.5		2.0	1.8	1.6	1.5		2.0	1.8	1.6	1.5		36.0
38.0	1.9	1.7	1.6			1.9	1.7	1.5			2.0	1.7	1.5			1.9	1.7	1.5	1.4		2.0	1.7	1.5	1.4		38.0
40.0	1.5	1.7	1.5			1.8	1.6	1.5			1.6	1.7	1.5			1.9	1.7	1.5			1.7	1.7	1.5			40.0
42.0	1.1	1.4	1.5			1.8	1.6	1.4			1.2	1.5	1.5			1.8	1.6	1.5			1.2	1.5	1.5			42.0
44.0		0.9	1.2			1.7	1.6	1.4				1.0	1.4			1.4	1.6	1.4				1.1	1.4			44.0
46.0						1.7	1.5	1.4					0.9			1.0	1.3	1.4					1.1			46.0
48.0						1.5	1.5										0.9	1.2								48.0
50.0						1.2	1.3																			50.0
52.0							1.0																			52.0
54.0																										54.0
56.0																										56.0
58.0																										58.0
60.0																										60.0
64.0																										64.0
1	92	92	92	92	92	0	0	0	0	0	92	92	92	92	92	46	46	46	46	46	92	92	92	92	92	1
2	92	92	92	92	92	46	46	46	46	46	92	92	92	92	92	92	92	92	92	92	92	92	92	92	92	2
3	92	92	92	92	92	92	92	92	92	92	92	92	92	92	92	92	92	92	92	92	92	92	92	92	92	3
4	92	92	92	92	92	92	92	92	92	92	92	92	92	92	92	92	92	92	92	92	92	92	92	92	92	4
5	0	0	0	0	0	92	92	92	92	92	46	46	46	46	46	92	92	92	92	92	92	92	92	92	92	5
6	0	0	0	0	0	92	92	92	92	92	0	0	0	0	0	46	46	46	46	46	0	0	0	0	0	6
ID	83	83	83	83	83	26	26	26	26	26	65	65	65	65	65	38	38	38	38	38	49	49	49	49	49	ID
[DEG]	48~84.7	47~84.7	49~84.7	62~84.7	79~84.7	41~84.7	40~84.7	51~84.7	65~84.7	78~84.7	51~84.7	51~84.7	50~84.7	65~84.7	78~84.7	50~84.7	49~84.7	52~84.7	65~84.7	79~84.7	54~84.7	54~84.7	54~84.7	65~84.7	79~84.7	[DEG]
	1	1	1	1	1	1	1	1	1	1	1	1	1	1	1	1	1	1	1	1	1	1	1	1	1	
	8.7t	8.7t	8.7t	8.7t	8.7t	8.7t	8.7t	8.7t	8.7t	8.7t	8.7t	8.7t	8.7t	8.7t	8.7t	8.7t	8.7t	8.7t	8.7t	8.7t	8.7t	8.7t	8.7t	8.7t	8.7t	

フルオートラフィングジブ

FLJ	1.6m + 17.4m	22.7 t	8.0m x 7.5m	360 °	JPN

m	52.3	52.3	52.3	52.3	52.3	52.3	52.3	52.3	52.3	52.3	56.0	56.0	56.0	56.0	56.0	60.0	60.0	60.0	60.0	60.0						m
°	5	15	30	45	60	5	15	30	45	60	5	15	30	45	60	5	15	30	45	60						°
3.0																										3.0
3.5																										3.5
4.0																										4.0
4.5																										4.5
5.0																										5.0
6.0																										6.0
7.0																										7.0
8.0																										8.0
9.0																										9.0
10.0																										10.0
11.0																										11.0
12.0						2.0																				12.0
14.0	1.8					2.0					1.8															14.0
16.0	1.8	1.8				2.0	2.0				1.8	1.8				1.0										16.0
18.0	1.8	1.8				2.0	2.0				1.8	1.8				1.0	1.0									18.0
20.0	1.8	1.8	1.8			2.0	2.0	2.0			1.8	1.8				1.0	1.0									20.0
22.0	1.8	1.8	1.8			2.0	2.0	1.9			1.8	1.8	1.8			1.0	1.0	1.0								22.0
24.0	1.8	1.8	1.8	1.6		2.0	2.0	1.9	1.7		1.8	1.8	1.8	1.6		1.0	1.0	1.0								24.0
26.0	1.8	1.8	1.8	1.6	1.5	2.0	2.0	1.8	1.6	1.5	1.8	1.8	1.8	1.6	1.5	1.0	1.0	1.0	1.0							26.0
28.0	1.8	1.8	1.7	1.6	1.4	2.0	2.0	1.7	1.6	1.4	1.8	1.8	1.7	1.6	1.4	1.0	1.0	1.0	1.0	1.0						28.0
30.0	1.8	1.8	1.7	1.5		2.0	2.0	1.7	1.5		1.8	1.8	1.7	1.5		1.0	1.0	1.0	1.0	1.0						30.0
32.0	1.8	1.8	1.6	1.5		2.0	1.9	1.6	1.5		1.8	1.8	1.6	1.5		1.0	1.0	1.0	1.0							32.0
34.0	1.8	1.8	1.6	1.5		2.0	1.8	1.6	1.5		1.8	1.8	1.6	1.5		1.0	1.0	1.0	1.0							34.0
36.0	1.8	1.8	1.5	1.4		2.0	1.8	1.6	1.5		1.8	1.8	1.5	1.4		1.0	1.0	1.0	1.0							36.0
38.0	1.8	1.7	1.5	1.4		2.0	1.7	1.5	1.4		1.8	1.7	1.5	1.4		1.0	1.0	1.0	1.0							38.0
40.0	1.8	1.7	1.5	1.4		1.8	1.7	1.5	1.4		1.8	1.7	1.5	1.4		1.0	1.0	1.0	1.0							40.0
42.0	1.8	1.6	1.4			1.4	1.6	1.5			1.5	1.6	1.4	1.4		1.0	1.0	1.0	1.0							42.0
44.0	1.5	1.6	1.4			1.0	1.3	1.4			1.1	1.4	1.4			1.0	1.0	1.0	1.0							44.0
46.0	1.1	1.4	1.4				0.9	1.2				1.0	1.3				0.9	1.0								46.0
48.0		1.0	1.3										1.0					0.9								48.0
50.0			1.0																							50.0
52.0																										52.0
54.0																										54.0
56.0																										56.0
58.0																										58.0
60.0																										60.0
64.0																										64.0
1	46	46	46	46	46	92	92	92	92	92	92	92	92	92	92	100	100	100	100	100						1
2	92	92	92	92	92	92	92	92	92	92	92	92	92	92	92	100	100	100	100	100						2
3	92	92	92	92	92	92	92	92	92	92	92	92	92	92	92	100	100	100	100	100						3
4	92	92	92	92	92	92	92	92	92	92	92	92	92	92	92	100	100	100	100	100						4
5	92	92	92	92	92	92	92	92	92	92	92	92	92	92	92	100	100	100	100	100						5
6	92	92	92	92	92	46	46	46	46	46	92	92	92	92	92	100	100	100	100	100						6
ID	28	28	28	28	28	39	39	39	39	39	29	29	29	29	29	19	19	19	19	19						ID
[DEG]	53~84.7	53~84.7	53~84.7	65~84.7	78~84.7	55~84.7	55~84.7	58~84.7	65~84.7	78~84.7	58~84.7	58~84.7	58~84.7	66~84.7	79~84.7	60~84.7	60~84.7	61~84.7	66~84.7	78~84.7						[DEG]
	1	1	1	1	1	1	1	1	1	1	1	1	1	1	1	1	1	1	1	1						
	8.7t	8.7t	8.7t	8.7t	8.7t	8.7t	8.7t	8.7t	8.7t	8.7t	8.7t	8.7t	8.7t	8.7t	8.7t	8.7t	8.7t	8.7t	8.7t	8.7t						

FLJ	1.6m + 7.4m	22.7 t	8.0m x 6.2m	360 °	JPN

m	11.4	11.4	11.4	11.4	11.4	15.1	15.1	15.1	15.1	15.1	15.1	15.1	15.1	15.1	15.1	15.1	15.1	15.1	15.1	15.1	18.8	18.8	18.8	18.8	18.8	m
°	5	15	30	45	60	5	15	30	45	60	5	15	30	45	60	5	15	30	45	60	5	15	30	45	60	°
3.0	7.3					7.3					7.3					7.3					7.3					3.0
3.5	7.3					7.3					7.3					7.3					7.3					3.5
4.0	7.3	7.3				7.3	7.3				7.3	7.3				7.3	7.3				7.3					4.0
4.5	7.3	7.3				7.3	7.3				7.3	7.3				7.3	7.3				7.3					4.5
5.0	7.3	7.3	7.3			7.3	7.3				7.3	7.3				7.3	7.3				7.3	7.3				5.0
6.0	7.3	7.3	7.3			7.3	7.3	7.3			7.3	7.3	7.3			7.3	7.3	7.3			7.3	7.3	7.3			6.0
7.0	7.3	7.3	7.3	6.5	5.0	7.3	7.3	7.3	6.7		7.3	7.3	7.3	6.7		7.3	7.3	7.3	6.7		7.3	7.3	7.3			7.0
8.0	7.3	7.3	7.3	6.3	4.9	7.3	7.3	7.3	6.5	5.0	7.3	7.3	7.3	6.5	5.0	7.3	7.3	7.3	6.5	5.0	7.3	7.3	7.3	6.6	5.0	8.0
9.0	7.3	7.3	7.2	6.0		7.3	7.3	7.3	6.3	4.9	7.3	7.3	7.3	6.3	4.9	7.3	7.3	7.3	6.3	4.9	7.3	7.3	7.3	6.4	4.9	9.0
10.0	7.3	7.3	6.9	5.9		7.3	7.3	7.3	6.1		7.3	7.3	7.3	6.1		7.3	7.3	7.3	6.1		7.3	7.3	7.3	6.3	4.9	10.0
11.0	7.3	7.3	6.6	5.7		7.3	7.3	7.0	5.9		7.3	7.3	7.0	5.9		7.3	7.3	7.0	5.9		7.3	7.3	7.3	6.1		11.0
12.0	7.3	7.0	6.3			7.3	7.3	6.8	5.8		7.3	7.3	6.8	5.8		7.3	7.3	6.8	5.8		7.3	7.3	7.2	6.0		12.0
14.0	6.4	6.2	5.9			7.3	7.1	6.3			7.3	7.1	6.3			7.3	7.1	6.3			7.3	7.3	6.7	5.7		14.0
16.0	5.7	5.7				6.8	6.4	5.9			6.8	6.4	5.9			6.8	6.4	5.9			7.3	7.1	6.3			16.0
18.0						6.0	5.9				6.0	5.9				6.0	5.9				7.0	6.6	6.0			18.0
20.0						5.5					5.5					5.5					6.3	6.1				20.0
22.0																					5.8	5.7				22.0
24.0																					5.3					24.0
26.0																										26.0
28.0																										28.0
30.0																										30.0
32.0																										32.0
34.0																										34.0
36.0																										36.0
38.0																										38.0
40.0																										40.0
42.0																										42.0
44.0																										44.0
46.0																										46.0
48.0																										48.0
50.0																										50.0
52.0																										52.0
54.0																										54.0
56.0																										56.0
58.0																										58.0
60.0																										60.0
64.0																										64.0
1	0	0	0	0	0	0	0	0	0	0	0	0	0	0	0	0	0	0	0	0	0	0	0	0	0	1
2	0	0	0	0	0	0	0	0	0	0	0	0	0	0	0	46	46	46	46	46	0	0	0	0	0	2
3	0	0	0	0	0	0	0	0	0	0	46	46	46	46	46	0	0	0	0	0	0	0	0	0	0	3
4	0	0	0	0	0	46	46	46	46	46	0	0	0	0	0	0	0	0	0	0	0	0	0	0	0	4
5	0	0	0	0	0	0	0	0	0	0	0	0	0	0	0	0	0	0	0	0	46	46	46	46	46	5
6	0	0	0	0	0	0	0	0	0	0	0	0	0	0	0	0	0	0	0	0	46	46	46	46	46	6
ID	1	1	1	1	1	76	76	76	76	76	105	105	105	105	105	131	131	131	131	131	30	30	30	30	30	ID
[DEG]	0~84.7	0~84.7	0~84.7	0~84.7	0~84.7	24~84.7	37~84.7	48~84.7	64~84.7	75~84.7	24~84.7	37~84.7	48~84.7	64~84.7	75~84.7	24~84.7	37~84.7	48~84.7	64~84.7	75~84.7	22~84.7	34~84.7	50~84.7	63~84.7	75~84.7	[DEG]
	1	1	1	1	1	1	1	1	1	1	1	1	1	1	1	1	1	1	1	1	1	1	1	1	1	
	8.7t	8.7t	8.7t	8.7t	8.7t	8.7t	8.7t	8.7t	8.7t	8.7t	8.7t	8.7t	8.7t	8.7t	8.7t	8.7t	8.7t	8.7t	8.7t	8.7t	8.7t	8.7t	8.7t	8.7t	8.7t	

FLJ	1.6m + 7.4m	22.7 t	8.0m x 6.2m	360 °	JPN

m	18.8	18.8	18.8	18.8	18.8	18.8	18.8	18.8	18.8	18.8	18.8	18.8	18.8	18.8	18.8	22.6	22.6	22.6	22.6	22.6	26.3	26.3	26.3	26.3	26.3	m
°	5	15	30	45	60	5	15	30	45	60	5	15	30	45	60	5	15	30	45	60	5	15	30	45	60	°
3.0	7.3					7.3					7.3															3.0
3.5	7.3					7.3					7.3															3.5
4.0	7.3					7.3	7.3				7.3	7.3				7.3										4.0
4.5	7.3					7.3	7.3				7.3	7.3				7.3										4.5
5.0	7.3	7.3				7.3	7.3				7.3	7.3				7.3	7.3				7.3					5.0
6.0	7.3	7.3	7.3			7.3	7.3	7.3			7.3	7.3	7.3			7.3	7.3				7.3	7.3				6.0
7.0	7.3	7.3	7.3	6.9		7.3	7.3	7.3	6.9		7.3	7.3	7.3	6.9		7.3	7.3	7.3			7.3	7.3				7.0
8.0	7.3	7.3	7.3	6.6	5.0	7.3	7.3	7.3	6.6	5.0	7.3	7.3	7.3	6.6	5.0	7.3	7.3	7.3	6.8		7.3	7.3	7.3			8.0
9.0	7.3	7.3	7.3	6.4	4.9	7.3	7.3	7.3	6.4	4.9	7.3	7.3	7.3	6.4	4.9	7.3	7.3	7.3	6.6	5.0	7.3	7.3	7.3	6.7	5.0	9.0
10.0	7.3	7.3	7.3	6.3	4.9	7.3	7.3	7.3	6.3	4.9	7.3	7.3	7.3	6.3	4.9	7.3	7.3	7.3	6.4	4.9	7.3	7.3	7.3	6.5	4.9	10.0
11.0	7.3	7.3	7.3	6.1		7.3	7.3	7.3	6.1		7.3	7.3	7.3	6.1		7.3	7.3	7.3	6.3	4.8	7.3	7.3	7.3	6.4	4.9	11.0
12.0	7.3	7.3	7.2	6.0		7.3	7.3	7.2	6.0		7.3	7.3	7.2	6.0		7.3	7.3	7.3	6.1		7.3	7.3	7.3	6.3	4.8	12.0
14.0	7.3	7.3	6.7	5.7		7.3	7.3	6.7	5.7		7.3	7.3	6.7	5.7		7.2	6.9	6.5	5.9		7.3	7.3	7.3	6.0		14.0
16.0	7.3	7.1	6.3			7.3	7.1	6.3			7.3	7.1	6.3			6.4	6.1	5.9	5.7		7.3	7.3	7.0	5.8		16.0
18.0	7.0	6.6	6.0			7.0	6.6	6.0			7.0	6.6	6.0			5.7	5.5	5.3			7.3	7.3	6.6	5.7		18.0
20.0	6.3	6.1				6.3	6.1				6.3	6.1				5.1	5.0	4.9			6.8	7.1	6.3			20.0
22.0	5.8	5.7				5.8	5.7				5.8	5.7				4.6	4.5	4.5			5.4	5.6	5.9			22.0
24.0	5.3					5.3					5.3					4.2	4.1				4.3	4.5	4.7			24.0
26.0																3.8	3.8				3.3	3.5				26.0
28.0																					2.5	2.7				28.0
30.0																					1.9					30.0
32.0																										32.0
34.0																										34.0
36.0																										36.0
38.0																										38.0
40.0																										40.0
42.0																										42.0
44.0																										44.0
46.0																										46.0
48.0																										48.0
50.0																										50.0
52.0																										52.0
54.0																										54.0
56.0																										56.0
58.0																										58.0
60.0																										60.0
64.0																										64.0
1	0	0	0	0	0	0	0	0	0	0	0	0	0	0	0	0	0	0	0	0	92	92	92	92	92	1
2	0	0	0	0	0	0	0	0	0	0	46	46	46	46	46	0	0	0	0	0	92	92	92	92	92	2
3	0	0	0	0	0	46	46	46	46	46	46	46	46	46	46	0	0	0	0	0	0	0	0	0	0	3
4	46	46	46	46	46	46	46	46	46	46	0	0	0	0	0	0	0	0	0	0	0	0	0	0	0	4
5	46	46	46	46	46	0	0	0	0	0	0	0	0	0	0	46	46	46	46	46	0	0	0	0	0	5
6	0	0	0	0	0	0	0	0	0	0	0	0	0	0	0	92	92	92	92	92	0	0	0	0	0	6
ID	58	58	58	58	58	88	88	88	88	88	113	113	113	113	113	20	20	20	20	20	134	134	134	134	134	ID
[DEG]	21~84.7	33~84.7	50~84.7	63~84.7	75~84.7	21~84.7	33~84.7	50~84.7	63~84.7	75~84.7	21~84.7	33~84.7	50~84.7	63~84.7	75~84.7	29~84.7	30~84.7	46~84.7	63~84.7	76~84.7	26~84.7	34~84.7	48~84.7	63~84.7	76~84.7	[DEG]
	1	1	1	1	1	1	1	1	1	1	1	1	1	1	1	1	1	1	1	1	1	1	1	1	1	
	8.7t	8.7t	8.7t	8.7t	8.7t	8.7t	8.7t	8.7t	8.7t	8.7t	8.7t	8.7t	8.7t	8.7t	8.7t	8.7t	8.7t	8.7t	8.7t	8.7t	8.7t	8.7t	8.7t	8.7t	8.7t	

m	30.0	30.0	30.0	30.0	30.0	30.0	30.0	30.0	30.0	30.0	33.7	33.7	33.7	33.7	33.7	37.4	37.4	37.4	37.4	37.4	37.4	37.4	37.4	37.4	37.4	m
°	5	15	30	45	60	5	15	30	45	60	5	15	30	45	60	5	15	30	45	60	5	15	30	45	60	°
3.0																										3.0
3.5																										3.5
4.0																										4.0
4.5																										4.5
5.0	7.3					7.3																				5.0
6.0	7.3	7.3				7.3	7.3				7.3															6.0
7.0	7.3	7.3				7.3	7.3				7.3	7.3				7.1					7.3					7.0
8.0	7.3	7.3	7.3			7.3	7.3	7.3			7.3	7.3				7.1	7.1				7.3	7.3				8.0
9.0	7.3	7.3	7.3			7.3	7.3	7.3	6.8		7.3	7.3	7.3			7.1	7.1				7.3	7.3				9.0
10.0	7.3	7.3	7.3	6.6	5.0	7.3	7.3	7.3	6.6	5.0	7.3	7.3	7.3	6.7		7.1	7.1	7.1			7.3	7.3	7.3			10.0
11.0	7.3	7.3	7.3	6.5	4.9	7.3	7.3	7.3	6.5	4.9	7.3	7.3	7.3	6.6	4.9	7.1	7.1	7.1	6.7	5.0	7.3	7.3	7.2	6.7		11.0
12.0	7.3	7.3	7.1	6.4	4.9	7.3	7.3	7.3	6.4	4.9	7.3	7.3	7.3	6.5	4.9	7.1	7.1	7.1	6.6	4.9	7.3	7.3	6.9	6.4	4.9	12.0
14.0	6.8	6.6	6.3	6.1		7.3	7.3	7.3	6.1		7.3	7.3	7.3	6.2	4.8	7.1	7.1	7.1	6.3	4.8	6.9	6.6	6.2	5.9	4.8	14.0
16.0	6.0	5.8	5.6	5.5		7.3	7.3	7.2	5.9		7.3	7.3	7.3	6.0		7.1	7.1	7.1	6.1		6.1	5.9	5.7	5.5		16.0
18.0	5.3	5.2	5.1	5.0		7.3	7.3	6.9	5.8		7.3	7.3	7.1	5.9		7.1	7.1	7.1	6.0		5.5	5.4	5.2	5.0		18.0
20.0	4.8	4.7	4.6	4.5		6.8	7.1	6.6	5.6		6.8	7.1	6.8	5.7		6.9	7.1	7.1	5.8		5.0	4.9	4.7	4.6		20.0
22.0	4.3	4.3	4.2			5.4	5.7	6.0			5.4	5.7	6.0	5.6		5.5	5.8	6.2	5.7		4.6	4.5	4.3	4.3		22.0
24.0	3.9	3.9	3.8			4.3	4.5	4.7			4.3	4.5	4.8			4.4	4.6	4.9	5.1		4.2	4.1	4.0	4.0		24.0
26.0	3.5	3.5	3.5			3.3	3.5	3.7			3.3	3.5	3.8			3.4	3.6	3.9			3.9	3.8	3.7			26.0
28.0	3.2	3.1				2.5	2.7				2.5	2.7	2.9			2.6	2.8	3.1			3.6	3.5	3.5			28.0
30.0	2.8	2.8				1.9	2.0				1.8	2.0	2.2			2.0	2.1	2.3			3.4	3.3	3.2			30.0
32.0	2.5	2.5				1.2	1.3				1.2	1.4				1.3	1.5	1.7			3.1	3.1	3.0			32.0
34.0	2.2																0.9				2.8	2.8				34.0
36.0																					2.4	2.5				36.0
38.0																					2.0	2.1				38.0
40.0																					1.7					40.0
42.0																										42.0
44.0																										44.0
46.0																										46.0
48.0																										48.0
50.0																										50.0
52.0																										52.0
54.0																										54.0
56.0																										56.0
58.0																										58.0
60.0																										60.0
64.0																										64.0
1	0	0	0	0	0	92	92	92	92	92	92	92	92	92	92	92	92	92	92	92	0	0	0	0	0	1
2	0	0	0	0	0	92	92	92	92	92	92	92	92	92	92	92	92	92	92	92	0	0	0	0	0	2
3	0	0	0	0	0	46	46	46	46	46	92	92	92	92	92	92	92	92	92	92	46	46	46	46	46	3
4	46	46	46	46	46	0	0	0	0	0	0	0	0	0	0	46	46	46	46	46	92	92	92	92	92	4
5	92	92	92	92	92	0	0	0	0	0	0	0	0	0	0	0	0	0	0	0	92	92	92	92	92	5
6	92	92	92	92	92	0	0	0	0	0	0	0	0	0	0	0	0	0	0	0	92	92	92	92	92	6
ID	22	22	22	22	22	116	116	116	116	116	110	110	110	110	110	93	93	93	93	93	24	24	24	24	24	ID
[DEG]	24~84.7	32~84.7	50~84.7	63~84.7	78~84.7	31~84.7	32~84.7	49~84.7	63~84.7	78~84.7	39~84.7	40~84.7	46~84.7	63~84.7	76~84.7	45~84.7	42~84.7	48~84.7	63~84.7	78~84.7	28~84.7	34~84.7	49~84.7	63~84.7	78~84.7	[DEG]
	1	1	1	1	1	1	1	1	1	1	1	1	1	1	1	1	1	1	1	1	1	1	1	1	1	
	8.7t	8.7t	8.7t	8.7t	8.7t	8.7t	8.7t	8.7t	8.7t	8.7t	8.7t	8.7t	8.7t	8.7t	8.7t	8.7t	8.7t	8.7t	8.7t	8.7t	8.7t	8.7t	8.7t	8.7t	8.7t	

フルオートラフィングジブ

FLJ	1.6m + 7.4m	22.7 t	8.0m x 6.2m	360 °	JPN

m	41.2	41.2	41.2	41.2	41.2	44.9	44.9	44.9	44.9	44.9	44.9	44.9	44.9	44.9	44.9	48.6	48.6	48.6	48.6	48.6	48.6	48.6	48.6	48.6	48.6	m
°	5	15	30	45	60	5	15	30	45	60	5	15	30	45	60	5	15	30	45	60	5	15	30	45	60	°
3.0																										3.0
3.5																										3.5
4.0																										4.0
4.5																										4.5
5.0																										5.0
6.0																										6.0
7.0	7.3																									7.0
8.0	7.3										6.5															8.0
9.0	7.3	7.3				4.6					6.5					4.8					5.4					9.0
10.0	7.3	7.3	7.3			4.6	4.6				6.5	6.5				4.8					5.4					10.0
11.0	7.3	7.3	7.3			4.6	4.6				6.5	6.5	6.5			4.8	4.8				5.4	5.4				11.0
12.0	7.3	7.3	7.3	6.6	4.9	4.6	4.6	4.6			6.5	6.5	6.5			4.8	4.8	4.8			5.4	5.4	5.4			12.0
14.0	7.3	7.3	7.3	6.4	4.9	4.6	4.6	4.6	4.6	4.6	6.5	6.5	6.5	6.5	4.9	4.8	4.8	4.8	4.8	4.8	5.4	5.4	5.4	5.4	4.9	14.0
16.0	7.3	7.3	7.3	6.2		4.6	4.6	4.6	4.6	4.6	6.5	6.5	6.5	6.3	4.8	4.8	4.8	4.8	4.8	4.8	5.4	5.4	5.4	5.4	4.8	16.0
18.0	7.3	7.3	7.2	6.1		4.6	4.6	4.6	4.6		6.5	6.5	6.5	6.1		4.8	4.8	4.8	4.8		5.4	5.4	5.4	5.4		18.0
20.0	7.0	7.3	7.1	5.9		4.6	4.6	4.6	4.6		6.5	6.5	6.5	6.0		4.8	4.8	4.8	4.8		5.4	5.4	5.4	5.4		20.0
22.0	5.6	5.9	6.3	5.8		4.6	4.5	4.3	4.2		5.8	6.1	6.5	5.9		4.8	4.8	4.8	4.7		5.4	5.4	5.4	5.4		22.0
24.0	4.5	4.7	5.0	5.3		4.3	4.2	4.0	4.0		4.6	4.9	5.2	5.5		4.8	4.8	4.6	4.5		4.8	5.0	5.4	5.4		24.0
26.0	3.5	3.7	4.0	4.2		4.0	3.9	3.8	3.7		3.7	3.9	4.2	4.4		4.4	4.5	4.3	4.2		3.8	4.1	4.4	4.6		26.0
28.0	2.7	2.9	3.2			3.7	3.6	3.5	3.5		2.9	3.1	3.3	3.5		3.6	3.8	4.0	4.0		3.0	3.2	3.5	3.7		28.0
30.0	2.1	2.2	2.4			3.5	3.4	3.3			2.2	2.4	2.6			2.9	3.1	3.3	3.4		2.4	2.5	2.8	2.9		30.0
32.0	1.4	1.6	1.8			3.0	3.1	3.1			1.6	1.8	2.0			2.3	2.5	2.6			1.8	1.9	2.1			32.0
34.0	0.9	1.0	1.2			2.5	2.6	2.7			1.1	1.2	1.4			1.8	1.9	2.1			1.2	1.4	1.6			34.0
36.0						2.0	2.1	2.2								1.3	1.4	1.6								36.0
38.0						1.6	1.7									0.9	1.0	1.1								38.0
40.0						1.2	1.3																			40.0
42.0						0.9	1.0																			42.0
44.0																										44.0
46.0																										46.0
48.0																										48.0
50.0																										50.0
52.0																										52.0
54.0																										54.0
56.0																										56.0
58.0																										58.0
60.0																										60.0
64.0																										64.0
1	92	92	92	92	92	0	0	0	0	0	92	92	92	92	92	46	46	46	46	46	92	92	92	92	92	1
2	92	92	92	92	92	46	46	46	46	46	92	92	92	92	92	92	92	92	92	92	92	92	92	92	92	2
3	92	92	92	92	92	92	92	92	92	92	92	92	92	92	92	92	92	92	92	92	92	92	92	92	92	3
4	92	92	92	92	92	92	92	92	92	92	92	92	92	92	92	92	92	92	92	92	92	92	92	92	92	4
5	0	0	0	0	0	92	92	92	92	92	46	46	46	46	46	92	92	92	92	92	92	92	92	92	92	5
6	0	0	0	0	0	92	92	92	92	92	0	0	0	0	0	46	46	46	46	46	0	0	0	0	0	6
ID	83	83	83	83	83	26	26	26	26	26	65	65	65	65	65	38	38	38	38	38	49	49	49	49	49	ID
[DEG]	47~84.7	48~84.7	49~84.7	63~84.7	79~84.7	38~84.7	39~84.7	51~84.7	63~84.7	78~84.7	51~84.7	52~84.7	53~84.7	63~84.7	78~84.7	49~84.7	50~84.7	51~84.7	63~84.7	79~84.7	54~84.7	56~84.7	57~84.7	63~84.7	79~84.7	[DEG]
	1	1	1	1	1	1	1	1	1	1	1	1	1	1	1	1	1	1	1	1	1	1	1	1	1	
	8.7t	8.7t	8.7t	8.7t	8.7t	8.7t	8.7t	8.7t	8.7t	8.7t	8.7t	8.7t	8.7t	8.7t	8.7t	8.7t	8.7t	8.7t	8.7t	8.7t	8.7t	8.7t	8.7t	8.7t	8.7t	

m	52.3	52.3	52.3	52.3	52.3	52.3	52.3	52.3	52.3	52.3	56.0	56.0	56.0	56.0	56.0	60.0	60.0	60.0	60.0	60.0						m
°	5	15	30	45	60	5	15	30	45	60	5	15	30	45	60	5	15	30	45	60						°
3.0																										3.0
3.5																										3.5
4.0																										4.0
4.5																										4.5
5.0																										5.0
6.0																										6.0
7.0																										7.0
8.0																										8.0
9.0																										9.0
10.0	3.9					4.4																				10.0
11.0	3.9					4.4					3.7															11.0
12.0	3.9	3.9				4.4	4.4				3.7															12.0
14.0	3.9	3.9	3.9			4.4	4.4	4.4			3.7	3.7	3.7			3.2	3.2									14.0
16.0	3.9	3.9	3.9	3.9	3.9	4.4	4.4	4.4	4.4	4.4	3.7	3.7	3.7	3.7	3.7	3.2	3.2	3.2	3.2							16.0
18.0	3.9	3.9	3.9	3.9	3.9	4.4	4.4	4.4	4.4	4.4	3.7	3.7	3.7	3.7	3.7	3.2	3.2	3.2	3.2	3.2						18.0
20.0	3.9	3.9	3.9	3.9		4.4	4.4	4.4	4.4		3.7	3.7	3.7	3.7		3.2	3.2	3.2	3.2	3.2						20.0
22.0	3.9	3.9	3.9	3.9		4.4	4.4	4.4	4.4		3.7	3.7	3.7	3.7		3.2	3.2	3.2	3.2							22.0
24.0	3.9	3.9	3.9	3.9		4.4	4.4	4.4	4.4		3.7	3.7	3.7	3.7		3.2	3.2	3.2	3.2							24.0
26.0	3.9	3.9	3.7	3.6		4.0	4.2	4.2	4.1		3.7	3.7	3.7	3.6		3.2	3.2	3.2	3.2							26.0
28.0	3.7	3.6	3.5	3.4		3.2	3.4	3.7	3.9		3.4	3.6	3.5	3.4		3.2	3.2	3.2	3.2							28.0
30.0	3.0	3.2	3.3	3.2		2.5	2.7	3.0	3.1		2.7	2.9	3.1	3.2		2.6	2.8	3.1	3.0							30.0
32.0	2.5	2.6	2.8			2.0	2.1	2.3			2.1	2.3	2.5	2.6		2.1	2.2	2.4	2.6							32.0
34.0	1.9	2.1	2.2			1.4	1.6	1.8			1.6	1.8	1.9				1.7	1.9	2.0							34.0
36.0	1.5	1.6	1.8										1.4													36.0
38.0	1.0	1.2	1.3																							38.0
40.0																										40.0
42.0																										42.0
44.0																										44.0
46.0																										46.0
48.0																										48.0
50.0																										50.0
52.0																										52.0
54.0																										54.0
56.0																										56.0
58.0																										58.0
60.0																										60.0
64.0																										64.0
1	46	46	46	46	46	92	92	92	92	92	92	92	92	92	92	100	100	100	100	100						1
2	92	92	92	92	92	92	92	92	92	92	92	92	92	92	92	100	100	100	100	100						2
3	92	92	92	92	92	92	92	92	92	92	92	92	92	92	92	100	100	100	100	100						3
4	92	92	92	92	92	92	92	92	92	92	92	92	92	92	92	100	100	100	100	100						4
5	92	92	92	92	92	92	92	92	92	92	92	92	92	92	92	100	100	100	100	100						5
6	92	92	92	92	92	46	46	46	46	46	92	92	92	92	92	100	100	100	100	100						6
ID	28	28	28	28	28	39	39	39	39	39	29	29	29	29	29	19	19	19	19	19						ID
[DEG]	53~84.7	54~84.7	55~84.7	66~84.7	78~84.7	58~84.7	59~84.7	60~84.7	66~84.7	78~84.7	60~84.7	61~84.7	60~84.7	66~84.7	79~84.7	65~84.7	64~84.7	65~84.7	66~84.7	79~84.7						[DEG]
	1	1	1	1	1	1	1	1	1	1	1	1	1	1	1	1	1	1	1	1						
	8.7t	8.7t	8.7t	8.7t	8.7t	8.7t	8.7t	8.7t	8.7t	8.7t	8.7t	8.7t	8.7t	8.7t	8.7t	8.7t	8.7t	8.7t	8.7t	8.7t						

FLJ	1.6m + 12.4m	22.7 t	8.0m x 6.2m	360 °	JPN

m	11.4	11.4	11.4	11.4	11.4	15.1	15.1	15.1	15.1	15.1	15.1	15.1	15.1	15.1	15.1	15.1	15.1	15.1	15.1	15.1	18.8	18.8	18.8	18.8	18.8	m
°	5	15	30	45	60	5	15	30	45	60	5	15	30	45	60	5	15	30	45	60	5	15	30	45	60	°
3.0	4.3																									3.0
3.5	4.3																									3.5
4.0	4.3					4.3					4.3					4.3					4.3					4.0
4.5	4.3					4.3					4.3					4.3					4.3					4.5
5.0	4.3					4.3					4.3					4.3					4.3					5.0
6.0	4.3	4.3				4.3	4.3				4.3	4.3				4.3	4.3				4.3					6.0
7.0	4.3	4.3				4.3	4.3				4.3	4.3				4.3	4.3				4.3	4.3				7.0
8.0	4.3	4.3				4.3	4.3				4.3	4.3				4.3	4.3				4.3	4.3				8.0
9.0	4.3	4.3	4.3			4.3	4.3	4.3			4.3	4.3	4.3			4.3	4.3	4.3			4.3	4.3				9.0
10.0	4.3	4.3	4.1			4.3	4.3	4.3			4.3	4.3	4.3			4.3	4.3	4.3			4.3	4.3	4.3			10.0
11.0	4.3	4.3	3.9	3.2		4.3	4.3	4.1	3.3		4.3	4.3	4.1	3.3		4.3	4.3	4.1	3.3		4.3	4.3	4.1			11.0
12.0	4.3	4.3	3.7	3.1		4.3	4.3	3.9	3.2		4.3	4.3	3.9	3.2		4.3	4.3	3.9	3.2		4.3	4.3	3.9	3.3		12.0
14.0	4.3	4.0	3.3	2.9		4.3	4.3	3.5	3.0		4.3	4.3	3.5	3.0		4.3	4.3	3.5	3.0		4.3	4.3	3.7	3.1		14.0
16.0	3.8	3.5	3.0	2.7		4.3	3.9	3.3	2.8		4.3	3.9	3.3	2.8		4.3	3.9	3.3	2.8		4.3	4.1	3.4	2.9		16.0
18.0	3.4	3.2	2.8			3.9	3.6	3.0	2.7		3.9	3.6	3.0	2.7		3.9	3.6	3.0	2.7		4.3	3.8	3.2	2.8		18.0
20.0	3.0	2.9				3.5	3.3	2.9			3.5	3.3	2.9			3.5	3.3	2.9			4.0	3.5	3.0	2.7		20.0
22.0	2.7					3.2	3.0				3.2	3.0				3.2	3.0				3.6	3.3	2.9			22.0
24.0						2.9	2.8				2.9	2.8				2.9	2.8				3.3	3.1	2.8			24.0
26.0																					3.0	2.9				26.0
28.0																					2.8					28.0
30.0																										30.0
32.0																										32.0
34.0																										34.0
36.0																										36.0
38.0																										38.0
40.0																										40.0
42.0																										42.0
44.0																										44.0
46.0																										46.0
48.0																										48.0
50.0																										50.0
52.0																										52.0
54.0																										54.0
56.0																										56.0
58.0																										58.0
60.0																										60.0
64.0																										64.0
1	0	0	0	0		0	0	0	0		0	0	0	0		0	0	0	0		0	0	0	0		1
2	0	0	0	0		0	0	0	0		0	0	0	0		46	46	46	46		0	0	0	0		2
3	0	0	0	0		0	0	0	0		46	46	46	46		0	0	0	0		0	0	0	0		3
4	0	0	0	0		46	46	46	46		0	0	0	0		0	0	0	0		0	0	0	0		4
5	0	0	0	0		0	0	0	0		0	0	0	0		0	0	0	0		46	46	46	46		5
6	0	0	0	0		0	0	0	0		0	0	0	0		0	0	0	0		46	46	46	46		6
ID	1	1	1	1		76	76	76	76		105	105	105	105		131	131	131	131		30	30	30	30		ID
[DEG]	0~84.7	0~84.7	0~84.7	0~84.7		29~84.7	32~84.7	51~84.7	60~84.7		29~84.7	31~84.7	51~84.7	60~84.7		29~84.7	31~84.7	51~84.7	60~84.7		26~84.7	37~84.7	46~84.7	60~84.7		[DEG]
	1	1	1	1		1	1	1	1		1	1	1	1		1	1	1	1		1	1	1	1		
	8.7t	8.7t	8.7t	8.7t		8.7t	8.7t	8.7t	8.7t		8.7t	8.7t	8.7t	8.7t		8.7t	8.7t	8.7t	8.7t		8.7t	8.7t	8.7t	8.7t		

m	18.8	18.8	18.8	18.8	18.8	18.8	18.8	18.8	18.8	18.8	18.8	18.8	18.8	18.8	18.8	22.6	22.6	22.6	22.6	22.6	26.3	26.3	26.3	26.3	26.3	m
°	5	15	30	45	60	5	15	30	45	60	5	15	30	45	60	5	15	30	45	60	5	15	30	45	60	°
3.0																										3.0
3.5																										3.5
4.0	4.3					4.3					4.3															4.0
4.5	4.3					4.3					4.3															4.5
5.0	4.3					4.3					4.3					4.3										5.0
6.0	4.3					4.3					4.3					4.3					4.3					6.0
7.0	4.3	4.3				4.3	4.3				4.3	4.3				4.3	4.3				4.3					7.0
8.0	4.3	4.3				4.3	4.3				4.3	4.3				4.3	4.3				4.3	4.3				8.0
9.0	4.3	4.3				4.3	4.3				4.3	4.3				4.3	4.3				4.3	4.3				9.0
10.0	4.3	4.3	4.3			4.3	4.3	4.3			4.3	4.3	4.3			4.3	4.3				4.3	4.3				10.0
11.0	4.3	4.3	4.1			4.3	4.3	4.2			4.3	4.3	4.2			4.3	4.3	4.1			4.3	4.3	4.3			11.0
12.0	4.3	4.3	4.0	3.3		4.3	4.3	4.0	3.3		4.3	4.3	4.0	3.3		4.3	4.3	4.0			4.3	4.3	4.2			12.0
14.0	4.3	4.3	3.7	3.1		4.3	4.3	3.7	3.1		4.3	4.3	3.7	3.1		4.3	4.3	3.7	3.1		4.3	4.3	3.9	3.2	2.7	14.0
16.0	4.3	4.1	3.5	2.9		4.3	4.2	3.5	2.9		4.3	4.2	3.5	2.9		4.3	4.2	3.5	3.0		4.3	4.3	3.7	3.0	2.6	16.0
18.0	4.3	3.8	3.2	2.8		4.3	3.8	3.2	2.8		4.3	3.9	3.2	2.8		4.3	3.9	3.3	2.9		4.3	4.2	3.5	2.9		18.0
20.0	4.0	3.6	3.0	2.7		4.0	3.6	3.0	2.7		4.0	3.6	3.0	2.7		4.2	3.7	3.1	2.8		4.3	4.0	3.3	2.8		20.0
22.0	3.6	3.3	2.9			3.6	3.3	2.9			3.6	3.3	2.9			3.9	3.4	3.0			4.3	3.7	3.2	2.7		22.0
24.0	3.3	3.1	2.8			3.3	3.1	2.8			3.3	3.1	2.8			3.6	3.3	2.9			4.0	3.5	3.0			24.0
26.0	3.0	2.9				3.0	2.9				3.0	2.9				3.4	3.1	2.8			3.8	3.3	2.9			26.0
28.0	2.8					2.8					2.8					3.2	3.0				3.5	3.2	2.8			28.0
30.0																2.9	2.8				2.8	3.0				30.0
32.0																2.7					2.2	2.4				32.0
34.0																					1.7	1.8				34.0
36.0																					1.2					36.0
38.0																										38.0
40.0																										40.0
42.0																										42.0
44.0																										44.0
46.0																										46.0
48.0																										48.0
50.0																										50.0
52.0																										52.0
54.0																										54.0
56.0																										56.0
58.0																										58.0
60.0																										60.0
64.0																										64.0
1	0	0	0	0		0	0	0	0		0	0	0	0		0	0	0	0		92	92	92	92	92	1
2	0	0	0	0		0	0	0	0		46	46	46	46		0	0	0	0		92	92	92	92	92	2
3	0	0	0	0		46	46	46	46		46	46	46	46		0	0	0	0		0	0	0	0	0	3
4	46	46	46	46		46	46	46	46		0	0	0	0		0	0	0	0		0	0	0	0	0	4
5	46	46	46	46		0	0	0	0		0	0	0	0		46	46	46	46		0	0	0	0	0	5
6	0	0	0	0		0	0	0	0		0	0	0	0		92	92	92	92		0	0	0	0	0	6
ID	58	58	58	58		88	88	88	88		113	113	113	113		20	20	20	20		134	134	134	134	134	ID
[DEG]	26~84.7	37~84.7	46~84.7	60~84.7		26~84.7	37~84.7	46~84.7	60~84.7		26~84.7	37~84.7	46~84.7	60~84.7		24~84.7	34~84.7	49~84.7	65~84.7		21~84.7	31~84.7	50~84.7	64~84.7	77~84.7	[DEG]
	1	1	1	1		1	1	1	1		1	1	1	1		1	1	1	1		1	1	1	1	1	
	8.7t	8.7t	8.7t	8.7t		8.7t	8.7t	8.7t	8.7t		8.7t	8.7t	8.7t	8.7t		8.7t	8.7t	8.7t	8.7t		8.7t	8.7t	8.7t	8.7t	8.7t	

フルオートラフィングジブ

FLJ	1.6m + 12.4m	22.7 t	8.0m x 6.2m	360 °	JPN

m	30.0	30.0	30.0	30.0	30.0	30.0	30.0	30.0	30.0	30.0	33.7	33.7	33.7	33.7	33.7	37.4	37.4	37.4	37.4	37.4	37.4	37.4	37.4	37.4	37.4	m
°	5	15	30	45	60	5	15	30	45	60	5	15	30	45	60	5	15	30	45	60	5	15	30	45	60	°
3.0																										3.0
3.5																										3.5
4.0																										4.0
4.5																										4.5
5.0																										5.0
6.0	4.0					4.3																				6.0
7.0	4.0					4.3					4.3					4.1										7.0
8.0	4.0					4.3					4.3					4.1					4.3					8.0
9.0	4.0	4.0				4.3	4.3				4.3	4.3				4.1					4.3					9.0
10.0	4.0	4.0				4.3	4.3				4.3	4.3				4.1	4.1				4.3	4.3				10.0
11.0	4.0	4.0				4.3	4.3	4.3			4.3	4.3				4.1	4.1				4.3	4.3				11.0
12.0	4.0	4.0	4.0			4.3	4.3	4.2			4.3	4.3	4.2			4.1	4.1				4.3	4.3				12.0
14.0	4.0	4.0	3.7	3.2		4.3	4.3	3.9	3.2		4.3	4.3	3.9	3.3		4.1	4.1	3.9			4.3	4.3	3.7			14.0
16.0	4.0	4.0	3.5	3.1		4.3	4.3	3.7	3.1		4.3	4.3	3.7	3.2	2.6	4.1	4.1	3.7	3.2	2.6	4.3	4.3	3.5	3.1		16.0
18.0	4.0	4.0	3.4	3.0		4.3	4.3	3.5	3.0		4.3	4.3	3.6	3.0	2.6	4.1	4.1	3.6	3.1	2.6	4.3	4.1	3.4	3.0		18.0
20.0	4.0	3.8	3.2	2.9		4.3	4.1	3.4	2.9		4.3	4.1	3.4	2.9		4.1	4.1	3.4	3.0		4.3	3.9	3.2	2.9		20.0
22.0	4.0	3.6	3.1	2.8		4.3	3.8	3.2	2.8		4.3	3.9	3.3	2.8		4.1	3.9	3.3	2.9		4.2	3.7	3.1	2.8		22.0
24.0	3.7	3.4	3.0	2.7		4.2	3.6	3.1	2.7		4.3	3.7	3.1	2.8		4.1	3.8	3.2	2.8		3.9	3.5	3.0	2.7		24.0
26.0	3.4	3.3	2.9			3.9	3.5	3.0			4.1	3.5	3.0	2.7		4.1	3.6	3.0	2.7		3.6	3.4	2.9	2.7		26.0
28.0	3.1	3.1	2.8			3.4	3.3	2.9			3.3	3.4	2.9			3.4	3.4	2.9	2.7		3.3	3.2	2.8	2.6		28.0
30.0	2.8	2.8	2.7			2.7	3.0	2.8			2.6	2.9	2.8			2.7	3.0	2.9			3.1	3.0	2.7			30.0
32.0	2.5	2.5	2.5			2.1	2.3	2.6			2.1	2.3	2.6			2.1	2.4	2.7			2.9	2.8	2.7			32.0
34.0	2.2	2.2				1.6	1.8				1.5	1.7	2.0			1.6	1.8	2.1			2.7	2.7	2.6			34.0
36.0		2.0				1.1	1.2				1.0	1.2				1.1	1.3	1.5			2.5	2.4	2.4			36.0
38.0																					2.3	2.2				38.0
40.0																					2.1	2.0				40.0
42.0																					1.8	1.9				42.0
44.0																										44.0
46.0																										46.0
48.0																										48.0
50.0																										50.0
52.0																										52.0
54.0																										54.0
56.0																										56.0
58.0																										58.0
60.0																										60.0
64.0																										64.0
1	0	0	0	0		92	92	92	92		92	92	92	92	92	92	92	92	92	92	0	0	0	0		1
2	0	0	0	0		92	92	92	92		92	92	92	92	92	92	92	92	92	92	0	0	0	0		2
3	0	0	0	0		46	46	46	46		92	92	92	92	92	92	92	92	92	92	46	46	46	46		3
4	46	46	46	46		0	0	0	0		0	0	0	0	0	46	46	46	46	46	92	92	92	92		4
5	92	92	92	92		0	0	0	0		0	0	0	0	0	0	0	0	0	0	92	92	92	92		5
6	92	92	92	92		0	0	0	0		0	0	0	0	0	0	0	0	0	0	92	92	92	92		6
ID	22	22	22	22		116	116	116	116		110	110	110	110	110	93	93	93	93	93	24	24	24	24		ID
[DEG]	39~84.7	36~84.7	47~84.7	64~84.7		33~84.7	35~84.7	47~84.7	64~84.7		40~84.7	42~84.7	48~84.7	64~84.7	77~84.7	45~84.7	47~84.7	49~84.7	64~84.7	79~84.7	35~84.7	37~84.7	50~84.7	64~84.7		[DEG]
	1	1	1	1		1	1	1	1		1	1	1	1	1	1	1	1	1	1	1	1	1	1		
	8.7t	8.7t	8.7t	8.7t		8.7t	8.7t	8.7t	8.7t		8.7t	8.7t	8.7t	8.7t	8.7t	8.7t	8.7t	8.7t	8.7t	8.7t	8.7t	8.7t	8.7t	8.7t		

m	41.2	41.2	41.2	41.2	41.2	44.9	44.9	44.9	44.9	44.9	44.9	44.9	44.9	44.9	44.9	48.6	48.6	48.6	48.6	48.6	48.6	48.6	48.6	48.6	48.6	m
°	5	15	30	45	60	5	15	30	45	60	5	15	30	45	60	5	15	30	45	60	5	15	30	45	60	°
3.0																										3.0
3.5																										3.5
4.0																										4.0
4.5																										4.5
5.0																										5.0
6.0																										6.0
7.0																										7.0
8.0	4.3																									8.0
9.0	4.3										4.0															9.0
10.0	4.3					3.0					4.0					3.2					3.6					10.0
11.0	4.3	4.3				3.0					4.0	4.0				3.2					3.6					11.0
12.0	4.3	4.3				3.0	3.0				4.0	4.0				3.2	3.2				3.6	3.6				12.0
14.0	4.3	4.3	3.9			3.0	3.0				4.0	4.0				3.2	3.2				3.6	3.6				14.0
16.0	4.3	4.3	3.7	3.2		3.0	3.0	3.0			4.0	4.0	3.7			3.2	3.2	3.2			3.6	3.6	3.6			16.0
18.0	4.3	4.3	3.5	3.1	2.6	3.0	3.0	3.0	2.9		4.0	4.0	3.5	3.0	2.6	3.2	3.2	3.2	3.0		3.6	3.6	3.5	3.0		18.0
20.0	4.3	4.1	3.4	3.0	2.6	3.0	3.0	3.0	2.9		4.0	4.0	3.4	2.9	2.6	3.2	3.2	3.2	2.9	2.6	3.6	3.6	3.3	2.9	2.6	20.0
22.0	4.3	4.0	3.3	2.9		3.0	3.0	3.0	2.8		4.0	3.9	3.2	2.9		3.2	3.2	3.2	2.8	2.5	3.6	3.6	3.2	2.8	2.5	22.0
24.0	4.3	3.8	3.2	2.8		3.0	3.0	3.0	2.7		4.0	3.7	3.1	2.8		3.2	3.2	3.1	2.7		3.6	3.6	3.1	2.8		24.0
26.0	4.2	3.6	3.0	2.7		3.0	3.0	2.9	2.6		4.0	3.6	3.0	2.7		3.2	3.2	3.0	2.7		3.6	3.5	3.0	2.7		26.0
28.0	3.4	3.5	2.9	2.7		3.0	3.0	2.8	2.6		3.5	3.5	2.9	2.7		3.2	3.2	2.9	2.6		3.6	3.4	2.9	2.6		28.0
30.0	2.7	3.0	2.9	2.6		3.0	3.0	2.7	2.5		2.8	3.1	2.9	2.6		3.2	3.2	2.8	2.6		2.9	3.2	2.8	2.6		30.0
32.0	2.1	2.4	2.7			3.0	2.9	2.7	2.5		2.2	2.5	2.8	2.6		2.8	3.1	2.7	2.5		2.3	2.6	2.8	2.5		32.0
34.0	1.6	1.9	2.2			2.8	2.7	2.6			1.7	2.0	2.3			2.3	2.5	2.6	2.5		1.8	2.1	2.4	2.5		34.0
36.0	1.1	1.4	1.6			2.5	2.6	2.5			1.2	1.5	1.8			1.8	2.1	2.3			1.3	1.6	1.9			36.0
38.0		0.9	1.1			2.1	2.2	2.4				1.0	1.3			1.4	1.6	1.9				1.1	1.4			38.0
40.0						1.7	1.9	2.0								1.0	1.2	1.5								40.0
42.0						1.4	1.5	1.6									0.9	1.1								42.0
44.0						1.1	1.2																			44.0
46.0							0.9																			46.0
48.0																										48.0
50.0																										50.0
52.0																										52.0
54.0																										54.0
56.0																										56.0
58.0																										58.0
60.0																										60.0
64.0																										64.0
1	92	92	92	92	92	0	0	0	0		92	92	92	92	92	46	46	46	46	46	92	92	92	92	92	1
2	92	92	92	92	92	46	46	46	46		92	92	92	92	92	92	92	92	92	92	92	92	92	92	92	2
3	92	92	92	92	92	92	92	92	92		92	92	92	92	92	92	92	92	92	92	92	92	92	92	92	3
4	92	92	92	92	92	92	92	92	92		92	92	92	92	92	92	92	92	92	92	92	92	92	92	92	4
5	0	0	0	0	0	92	92	92	92		46	46	46	46	46	92	92	92	92	92	92	92	92	92	92	5
6	0	0	0	0	0	92	92	92	92		0	0	0	0	0	46	46	46	46	46	0	0	0	0	0	6
ID	83	83	83	83	83	26	26	26	26		65	65	65	65	65	38	38	38	38	38	49	49	49	49	49	ID
[DEG]	50~84.7	49~84.7	51~84.7	64~84.7	78~84.7	43~84.7	41~84.7	49~84.7	64~84.7		53~84.7	52~84.7	55~84.7	64~84.7	79~84.7	52~84.7	51~84.7	53~84.7	64~84.7	78~84.7	57~84.7	56~84.7	58~84.7	64~84.7	78~84.7	[DEG]
	1	1	1	1	1	1	1	1	1		1	1	1	1	1	1	1	1	1	1	1	1	1	1	1	
	8.7t	8.7t	8.7t	8.7t	8.7t	8.7t	8.7t	8.7t	8.7t		8.7t	8.7t	8.7t	8.7t	8.7t	8.7t	8.7t	8.7t	8.7t	8.7t	8.7t	8.7t	8.7t	8.7t	8.7t	

FLJ	1.6m + 12.4m	22.7 t	8.0m x 6.2m	360 °	JPN

m	52.3	52.3	52.3	52.3	52.3	52.3	52.3	52.3	52.3	52.3	56.0	56.0	56.0	56.0	56.0	60.0	60.0	60.0	60.0	60.0						m
°	5	15	30	45	60	5	15	30	45	60	5	15	30	45	60	5	15	30	45	60						°
3.0																										3.0
3.5																										3.5
4.0																										4.0
4.5																										4.5
5.0																										5.0
6.0																										6.0
7.0																										7.0
8.0																										8.0
9.0																										9.0
10.0																										10.0
11.0	2.7					3.0																				11.0
12.0	2.7					3.0					2.6															12.0
14.0	2.7	2.7				3.0	3.0				2.6	2.6				1.9										14.0
16.0	2.7	2.7	2.7			3.0	3.0	3.0			2.6	2.6				1.9	1.9									16.0
18.0	2.7	2.7	2.7			3.0	3.0	3.0			2.6	2.6	2.6			1.9	1.9	1.9								18.0
20.0	2.7	2.7	2.7	2.7	2.6	3.0	3.0	3.0	2.9	2.6	2.6	2.6	2.6	2.6		1.9	1.9	1.9	1.9							20.0
22.0	2.7	2.7	2.7	2.7	2.5	3.0	3.0	3.0	2.8	2.5	2.6	2.6	2.6	2.6	2.5	1.9	1.9	1.9	1.9	1.9						22.0
24.0	2.7	2.7	2.7	2.7		3.0	3.0	3.0	2.7		2.6	2.6	2.6	2.6	2.5	1.9	1.9	1.9	1.9	1.9						24.0
26.0	2.7	2.7	2.7	2.6		3.0	3.0	3.0	2.7		2.6	2.6	2.6	2.6		1.9	1.9	1.9	1.9							26.0
28.0	2.7	2.7	2.7	2.6		3.0	3.0	2.9	2.6		2.6	2.6	2.6	2.6		1.9	1.9	1.9	1.9							28.0
30.0	2.7	2.7	2.7	2.5		3.0	3.0	2.8	2.5		2.6	2.6	2.6	2.5		1.9	1.9	1.9	1.9							30.0
32.0	2.7	2.7	2.7	2.5		2.5	2.8	2.7	2.5		2.6	2.6	2.6	2.5		1.9	1.9	1.9	1.9							32.0
34.0	2.4	2.6	2.6	2.4		2.0	2.2	2.5	2.5		2.1	2.3	2.6	2.4		1.9	1.9	1.9	1.9							34.0
36.0	2.0	2.2	2.4	2.4		1.5	1.7	2.0	2.2		1.6	1.9	2.2	2.4			1.8	1.9	1.9							36.0
38.0	1.5	1.7	2.0				1.3	1.6				1.4	1.7	1.9				1.7	1.9							38.0
40.0	1.2	1.4	1.6																							40.0
42.0		1.0	1.2																							42.0
44.0																										44.0
46.0																										46.0
48.0																										48.0
50.0																										50.0
52.0																										52.0
54.0																										54.0
56.0																										56.0
58.0																										58.0
60.0																										60.0
64.0																										64.0
1	46	46	46	46	46	92	92	92	92	92	92	92	92	92	92	100	100	100	100	100						1
2	92	92	92	92	92	92	92	92	92	92	92	92	92	92	92	100	100	100	100	100						2
3	92	92	92	92	92	92	92	92	92	92	92	92	92	92	92	100	100	100	100	100						3
4	92	92	92	92	92	92	92	92	92	92	92	92	92	92	92	100	100	100	100	100						4
5	92	92	92	92	92	92	92	92	92	92	92	92	92	92	92	100	100	100	100	100						5
6	92	92	92	92	92	46	46	46	46	46	92	92	92	92	92	100	100	100	100	100						6
ID	28	28	28	28	28	39	39	39	39	39	29	29	29	29	29	19	19	19	19	19						ID
[DEG]	55~84.7	54~84.7	56~84.7	65~84.7	79~84.7	59~84.7	59~84.7	61~84.7	64~84.7	79~84.7	62~84.7	61~84.7	63~84.7	65~84.7	79~84.7	66~84.7	66~84.7	66~84.7	67~84.7	79~84.7						[DEG]
	1	1	1	1	1	1	1	1	1	1	1	1	1	1	1	1	1	1	1	1						
	8.7t	8.7t	8.7t	8.7t	8.7t	8.7t	8.7t	8.7t	8.7t	8.7t	8.7t	8.7t	8.7t	8.7t	8.7t	8.7t	8.7t	8.7t	8.7t	8.7t						

FLJ	1.6m + 17.4m	22.7 t	8.0m x 6.2m	360 °	JPN

m	11.4	11.4	11.4	11.4	11.4	15.1	15.1	15.1	15.1	15.1	15.1	15.1	15.1	15.1	15.1	15.1	15.1	15.1	15.1	15.1	18.8	18.8	18.8	18.8	18.8	m
°	5	15	30	45	60	5	15	30	45	60	5	15	30	45	60	5	15	30	45	60	5	15	30	45	60	°
3.0																										3.0
3.5																										3.5
4.0																										4.0
4.5	3.3																									4.5
5.0	3.3					3.1					3.3					3.3										5.0
6.0	3.3					3.1					3.3					3.3					2.7					6.0
7.0	3.3					3.1					3.3					3.3					2.7					7.0
8.0	3.3	3.3				3.1					3.3					3.3					2.7					8.0
9.0	3.3	3.3				3.1	3.1				3.3	3.3				3.3	3.3				2.7	2.7				9.0
10.0	3.3	3.2				3.1	3.1				3.3	3.3				3.3	3.3				2.7	2.7				10.0
11.0	3.3	3.0				3.1	3.1				3.3	3.1				3.3	3.1				2.7	2.7				11.0
12.0	3.2	2.9	2.5			3.1	2.9				3.3	2.9				3.3	3.0				2.7	2.7				12.0
14.0	2.9	2.6	2.3			3.1	2.7	2.3			3.1	2.7	2.3			3.1	2.7	2.3			2.7	2.7	2.3			14.0
16.0	2.6	2.4	2.1	1.8		2.8	2.5	2.2	1.9		2.8	2.5	2.2	1.9		2.8	2.5	2.2	1.9		2.7	2.5	2.2			16.0
18.0	2.4	2.2	1.9	1.7		2.6	2.3	2.0	1.8		2.6	2.3	2.0	1.8		2.6	2.3	2.0	1.8		2.7	2.4	2.0	1.8		18.0
20.0	2.2	2.0	1.8	1.6		2.4	2.1	1.9	1.7		2.4	2.1	1.9	1.7		2.4	2.1	1.9	1.7		2.5	2.2	1.9	1.7		20.0
22.0	2.0	1.9	1.7			2.2	2.0	1.8	1.6		2.2	2.0	1.8	1.6		2.2	2.0	1.8	1.6		2.3	2.1	1.8	1.6		22.0
24.0	1.8	1.7				2.1	1.9	1.7			2.1	1.9	1.7			2.1	1.9	1.7			2.2	2.0	1.8	1.6		24.0
26.0	1.7	1.6				1.9	1.8	1.6			1.9	1.8	1.6			1.9	1.8	1.6			2.0	1.9	1.7			26.0
28.0						1.8	1.6				1.8	1.6				1.8	1.6				1.9	1.8	1.6			28.0
30.0						1.6					1.6					1.6					1.9	1.7				30.0
32.0																					1.7	1.6				32.0
34.0																					1.6					34.0
36.0																										36.0
38.0																										38.0
40.0																										40.0
42.0																										42.0
44.0																										44.0
46.0																										46.0
48.0																										48.0
50.0																										50.0
52.0																										52.0
54.0																										54.0
56.0																										56.0
58.0																										58.0
60.0																										60.0
64.0																										64.0
1	0	0	0	0		0	0	0	0		0	0	0	0		0	0	0	0		0	0	0	0		1
2	0	0	0	0		0	0	0	0		0	0	0	0		46	46	46	46		0	0	0	0		2
3	0	0	0	0		0	0	0	0		46	46	46	46		0	0	0	0		0	0	0	0		3
4	0	0	0	0		46	46	46	46		0	0	0	0		0	0	0	0		0	0	0	0		4
5	0	0	0	0		0	0	0	0		0	0	0	0		0	0	0	0		46	46	46	46		5
6	0	0	0	0		0	0	0	0		0	0	0	0		0	0	0	0		46	46	46	46		6
ID	1	1	1	1		76	76	76	76		105	105	105	105		131	131	131	131		30	30	30	30		ID
[DEG]	0~84.7	0~84.7	0~84.7	0~84.7		23~84.7	36~84.7	47~84.7	63~84.7		23~84.7	36~84.7	47~84.7	63~84.7		23~84.7	36~84.7	47~84.7	63~84.7		21~84.7	33~84.7	49~84.7	63~84.7		[DEG]
	1	1	1	1		1	1	1	1		1	1	1	1		1	1	1	1		1	1	1	1		
	8.7t	8.7t	8.7t	8.7t		8.7t	8.7t	8.7t	8.7t		8.7t	8.7t	8.7t	8.7t		8.7t	8.7t	8.7t	8.7t		8.7t	8.7t	8.7t	8.7t		

フルオートラフィングジブ

FLJ	1.6m + 17.4m	22.7 t	8.0m x 6.2m	360 °	JPN

m	18.8	18.8	18.8	18.8	18.8	18.8	18.8	18.8	18.8	18.8	18.8	18.8	18.8	18.8	18.8	22.6	22.6	22.6	22.6	22.6	26.3	26.3	26.3	26.3	26.3	m
°	5	15	30	45	60	5	15	30	45	60	5	15	30	45	60	5	15	30	45	60	5	15	30	45	60	°
3.0																										3.0
3.5																										3.5
4.0																										4.0
4.5																										4.5
5.0																										5.0
6.0	2.9					3.2					3.3					2.5										6.0
7.0	2.9					3.2					3.3					2.5					3.3					7.0
8.0	2.9					3.2					3.3					2.5					3.3					8.0
9.0	2.9	2.9				3.2	3.2				3.3	3.3				2.5					3.3					9.0
10.0	2.9	2.9				3.2	3.2				3.3	3.3				2.5	2.5				3.3	3.3				10.0
11.0	2.9	2.9				3.2	3.2				3.3	3.2				2.5	2.5				3.3	3.3				11.0
12.0	2.9	2.9				3.2	3.0				3.3	3.0				2.5	2.5				3.3	3.2				12.0
14.0	2.9	2.8	2.3			3.2	2.8	2.3			3.2	2.8	2.3			2.5	2.5	2.3			3.3	2.9	2.4			14.0
16.0	2.9	2.5	2.2	1.9		2.9	2.6	2.2	1.9		3.0	2.6	2.2	1.9		2.5	2.5	2.2			3.2	2.7	2.2			16.0
18.0	2.7	2.4	2.1	1.8		2.7	2.4	2.1	1.8		2.7	2.4	2.1	1.8		2.5	2.4	2.1	1.8		3.0	2.5	2.1	1.9		18.0
20.0	2.5	2.2	1.9	1.7		2.5	2.2	1.9	1.7		2.5	2.2	2.0	1.7		2.5	2.3	1.9	1.7		2.8	2.4	2.0	1.8		20.0
22.0	2.3	2.1	1.9	1.6		2.3	2.1	1.9	1.6		2.4	2.1	1.9	1.6		2.4	2.1	1.9	1.7		2.6	2.3	1.9	1.7		22.0
24.0	2.2	2.0	1.8	1.6		2.2	2.0	1.8	1.6		2.2	2.0	1.8	1.6		2.3	2.0	1.8	1.6		2.4	2.1	1.9	1.6		24.0
26.0	2.1	1.9	1.7			2.1	1.9	1.7			2.1	1.9	1.7			2.1	1.9	1.7	1.5		2.3	2.0	1.8	1.6		26.0
28.0	1.9	1.8	1.6			2.0	1.8	1.6			2.0	1.8	1.6			2.0	1.8	1.7			2.2	1.9	1.7	1.5		28.0
30.0	1.9	1.7				1.9	1.7				1.9	1.7				1.9	1.8	1.6			2.1	1.9	1.7			30.0
32.0	1.7	1.6				1.7	1.6				1.7	1.6				1.8	1.7				2.0	1.8	1.6			32.0
34.0	1.6					1.6					1.6					1.8	1.6				1.9	1.7	1.6			34.0
36.0																1.7					1.8	1.7				36.0
38.0																					1.5	1.6				38.0
40.0																					1.1					40.0
42.0																										42.0
44.0																										44.0
46.0																										46.0
48.0																										48.0
50.0																										50.0
52.0																										52.0
54.0																										54.0
56.0																										56.0
58.0																										58.0
60.0																										60.0
64.0																										64.0
1	0	0	0	0		0	0	0	0		0	0	0	0		0	0	0	0		92	92	92	92		1
2	0	0	0	0		0	0	0	0		46	46	46	46		0	0	0	0		92	92	92	92		2
3	0	0	0	0		46	46	46	46		46	46	46	46		0	0	0	0		0	0	0	0		3
4	46	46	46	46		46	46	46	46		0	0	0	0		0	0	0	0		0	0	0	0		4
5	46	46	46	46		0	0	0	0		0	0	0	0		46	46	46	46		0	0	0	0		5
6	0	0	0	0		0	0	0	0		0	0	0	0		92	92	92	92		0	0	0	0		6
ID	58	58	58	58		88	88	88	88		113	113	113	113		20	20	20	20		134	134	134	134		ID
[DEG]	21~84.7	32~84.7	49~84.7	63~84.7		21~84.7	32~84.7	49~84.7	63~84.7		21~84.7	32~84.7	49~84.7	63~84.7		28~84.7	37~84.7	51~84.7	63~84.7		25~84.7	34~84.7	47~84.7	62~84.7		[DEG]
	1	1	1	1		1	1	1	1		1	1	1	1		1	1	1	1		1	1	1	1		
	8.7t	8.7t	8.7t	8.7t		8.7t	8.7t	8.7t	8.7t		8.7t	8.7t	8.7t	8.7t		8.7t	8.7t	8.7t	8.7t		8.7t	8.7t	8.7t	8.7t		

m	30.0	30.0	30.0	30.0	30.0	30.0	30.0	30.0	30.0	30.0	33.7	33.7	33.7	33.7	33.7	37.4	37.4	37.4	37.4	37.4	37.4	37.4	37.4	37.4	37.4	m
°	5	15	30	45	60	5	15	30	45	60	5	15	30	45	60	5	15	30	45	60	5	15	30	45	60	°
3.0																										3.0
3.5																										3.5
4.0																										4.0
4.5																										4.5
5.0																										5.0
6.0																										6.0
7.0																										7.0
8.0	2.3					3.2					3.1															8.0
9.0	2.3					3.2					3.1					2.4					2.5					9.0
10.0	2.3					3.2					3.1					2.4					2.5					10.0
11.0	2.3	2.3				3.2	3.2				3.1					2.4					2.5					11.0
12.0	2.3	2.3				3.2	3.2				3.1	3.1				2.4	2.4				2.5					12.0
14.0	2.3	2.3				3.2	2.9				3.1	3.0				2.4	2.4				2.5	2.5				14.0
16.0	2.3	2.3	2.2			3.2	2.8	2.3			3.1	2.8	2.3			2.4	2.4	2.2			2.5	2.5				16.0
18.0	2.3	2.3	2.1			3.1	2.6	2.2	1.9		3.1	2.6	2.2			2.4	2.4	2.2			2.5	2.5	2.1			18.0
20.0	2.3	2.3	2.0	1.8		2.9	2.4	2.1	1.8	1.5	2.9	2.5	2.1	1.8		2.4	2.4	2.1	1.8		2.5	2.4	2.0	1.8		20.0
22.0	2.3	2.2	1.9	1.7		2.7	2.3	2.0	1.7	1.5	2.7	2.3	2.0	1.8		2.4	2.4	2.0	1.8	1.5	2.5	2.2	1.9	1.7	1.5	22.0
24.0	2.3	2.1	1.8	1.7		2.5	2.2	1.9	1.7		2.6	2.2	1.9	1.7		2.4	2.2	1.9	1.7	1.5	2.5	2.1	1.8	1.7	1.5	24.0
26.0	2.3	2.0	1.8	1.6		2.4	2.1	1.8	1.6		2.4	2.1	1.8	1.6		2.4	2.2	1.8	1.7		2.4	2.1	1.8	1.6		26.0
28.0	2.2	1.9	1.7	1.6		2.3	2.0	1.8	1.6		2.3	2.0	1.8	1.6		2.4	2.1	1.8	1.6		2.2	2.0	1.7	1.6		28.0
30.0	2.1	1.8	1.6	1.5		2.2	1.9	1.7	1.5		2.2	1.9	1.7	1.5		2.3	2.0	1.7	1.6		2.1	1.9	1.7	1.5		30.0
32.0	2.0	1.8	1.6			2.1	1.8	1.6			2.1	1.9	1.7	1.5		2.2	1.9	1.7	1.5		2.1	1.8	1.6	1.5		32.0
34.0	1.9	1.7	1.6			2.0	1.8	1.6			2.0	1.8	1.6			2.1	1.8	1.6	1.5		2.0	1.8	1.6	1.5		34.0
36.0		1.7	1.5			1.8	1.7	1.6			1.7	1.8	1.6			1.7	1.8	1.6			1.9	1.7	1.5			36.0
38.0		1.6				1.4	1.6				1.3	1.5	1.6			1.3	1.6	1.6			1.8	1.7	1.5			38.0
40.0		1.6				1.0	1.2					1.1				0.9	1.1	1.5			1.8	1.6	1.5			40.0
42.0		1.5																1.0			1.7	1.6	1.4			42.0
44.0																						1.5				44.0
46.0																						1.5				46.0
48.0																						1.5				48.0
50.0																										50.0
52.0																										52.0
54.0																										54.0
56.0																										56.0
58.0																										58.0
60.0																										60.0
64.0																										64.0
1	0	0	0	0		92	92	92	92	92	92	92	92	92		92	92	92	92	92	0	0	0	0	0	1
2	0	0	0	0		92	92	92	92	92	92	92	92	92		92	92	92	92	92	0	0	0	0	0	2
3	0	0	0	0		46	46	46	46	46	92	92	92	92		92	92	92	92	92	46	46	46	46	46	3
4	46	46	46	46		0	0	0	0	0	0	0	0	0		46	46	46	46	46	92	92	92	92	92	4
5	92	92	92	92		0	0	0	0	0	0	0	0	0		0	0	0	0	0	92	92	92	92	92	5
6	92	92	92	92		0	0	0	0	0	0	0	0	0		0	0	0	0	0	92	92	92	92	92	6
ID	22	22	22	22		116	116	116	116	116	110	110	110	110		93	93	93	93	93	24	24	24	24	24	ID
[DEG]	48~84.7	33~84.7	49~84.7	63~84.7		35~84.7	37~84.7	49~84.7	62~84.7	77~84.7	45~84.7	44~84.7	50~84.7	62~84.7		46~84.7	49~84.7	48~84.7	62~84.7	77~84.7	44~84.7	35~84.7	48~84.7	63~84.7	78~84.7	[DEG]
	1	1	1	1		1	1	1	1	1	1	1	1	1		1	1	1	1	1	1	1	1	1	1	
	8.7t	8.7t	8.7t	8.7t		8.7t	8.7t	8.7t	8.7t	8.7t	8.7t	8.7t	8.7t	8.7t		8.7t	8.7t	8.7t	8.7t	8.7t	8.7t	8.7t	8.7t	8.7t	8.7t	

FLJ	1.6m + 17.4m	22.7 t	8.0m x 6.2m	360 °	JPN

m	41.2	41.2	41.2	41.2	41.2	44.9	44.9	44.9	44.9	44.9	44.9	44.9	44.9	44.9	44.9	48.6	48.6	48.6	48.6	48.6	48.6	48.6	48.6	48.6	48.6	m
°	5	15	30	45	60	5	15	30	45	60	5	15	30	45	60	5	15	30	45	60	5	15	30	45	60	°
3.0																										3.0
3.5																										3.5
4.0																										4.0
4.5																										4.5
5.0																										5.0
6.0																										6.0
7.0																										7.0
8.0																										8.0
9.0																										9.0
10.0	2.7										2.4															10.0
11.0	2.7					1.9					2.4					2.0					2.2					11.0
12.0	2.7					1.9					2.4					2.0					2.2					12.0
14.0	2.7	2.7				1.9	1.9				2.4	2.4				2.0	2.0				2.2	2.2				14.0
16.0	2.7	2.7				1.9	1.9				2.4	2.4				2.0	2.0				2.2	2.2				16.0
18.0	2.7	2.6	2.1			1.9	1.9	1.9			2.4	2.4	2.1			2.0	2.0				2.2	2.2				18.0
20.0	2.7	2.5	2.1	1.8		1.9	1.9	1.9			2.4	2.4	2.0			2.0	2.0	2.0			2.2	2.2	2.0			20.0
22.0	2.7	2.4	2.0	1.8	1.5	1.9	1.9	1.9	1.7		2.4	2.4	2.0	1.7		2.0	2.0	1.9	1.7		2.2	2.2	1.9	1.7		22.0
24.0	2.6	2.3	1.9	1.7	1.5	1.9	1.9	1.8	1.7	1.5	2.4	2.2	1.9	1.7	1.5	2.0	2.0	1.9	1.7	1.5	2.2	2.2	1.9	1.7	1.5	24.0
26.0	2.5	2.2	1.8	1.7		1.9	1.9	1.8	1.6	1.5	2.4	2.2	1.8	1.7	1.5	2.0	2.0	1.8	1.6	1.5	2.2	2.1	1.8	1.6	1.5	26.0
28.0	2.4	2.1	1.8	1.6		1.9	1.9	1.7	1.6		2.4	2.1	1.8	1.6		2.0	2.0	1.7	1.6		2.2	2.1	1.8	1.6		28.0
30.0	2.3	2.0	1.7	1.6		1.9	1.9	1.7	1.5		2.3	2.0	1.7	1.6		2.0	2.0	1.7	1.6		2.2	2.0	1.7	1.6		30.0
32.0	2.2	1.9	1.7	1.6		1.9	1.9	1.6	1.5		2.2	1.9	1.7	1.5		2.0	1.9	1.6	1.5		2.2	1.9	1.7	1.5		32.0
34.0	2.1	1.9	1.6	1.5		1.9	1.8	1.6	1.5		2.1	1.9	1.6	1.5		2.0	1.8	1.6	1.5		2.1	1.9	1.6	1.5		34.0
36.0	1.7	1.8	1.6	1.5		1.9	1.7	1.5	1.5		1.8	1.8	1.6	1.5		2.0	1.8	1.6	1.5		1.8	1.8	1.6	1.5		36.0
38.0	1.3	1.6	1.6			1.9	1.7	1.5			1.4	1.7	1.5			1.9	1.7	1.5	1.4		1.4	1.7	1.5	1.4		38.0
40.0	0.9	1.2	1.5			1.8	1.6	1.5			1.0	1.3	1.5			1.5	1.7	1.5				1.3	1.5			40.0
42.0			1.1			1.8	1.6	1.4					1.2			1.2	1.4	1.5					1.3			42.0
44.0						1.5	1.6	1.4									1.1	1.3								44.0
46.0						1.2	1.4	1.4										1.0								46.0
48.0						0.9	1.1																			48.0
50.0																										50.0
52.0																										52.0
54.0																										54.0
56.0																										56.0
58.0																										58.0
60.0																										60.0
64.0																										64.0
% 1	92	92	92	92	92	0	0	0	0	0	92	92	92	92	92	46	46	46	46	46	92	92	92	92	92	1
% 2	92	92	92	92	92	46	46	46	46	46	92	92	92	92	92	92	92	92	92	92	92	92	92	92	92	2
% 3	92	92	92	92	92	92	92	92	92	92	92	92	92	92	92	92	92	92	92	92	92	92	92	92	92	3
% 4	92	92	92	92	92	92	92	92	92	92	92	92	92	92	92	92	92	92	92	92	92	92	92	92	92	4
% 5	0	0	0	0	0	92	92	92	92	92	46	46	46	46	46	92	92	92	92	92	92	92	92	92	92	5
% 6	0	0	0	0	0	92	92	92	92	92	0	0	0	0	0	46	46	46	46	46	0	0	0	0	0	6
ID	83	83	83	83	83	26	26	26	26	26	65	65	65	65	65	38	38	38	38	38	49	49	49	49	49	ID
[DEG]	50~84.7	53~84.7	52~84.7	62~84.7	79~84.7	44~84.7	46~84.7	51~84.7	65~84.7	78~84.7	53~84.7	56~84.7	56~84.7	65~84.7	78~84.7	54~84.7	54~84.7	54~84.7	65~84.7	79~84.7	59~84.7	59~84.7	59~84.7	65~84.7	79~84.7	[DEG]
	1	1	1	1	1	1	1	1	1	1	1	1	1	1	1	1	1	1	1	1	1	1	1	1	1	
	8.7t	8.7t	8.7t	8.7t	8.7t	8.7t	8.7t	8.7t	8.7t	8.7t	8.7t	8.7t	8.7t	8.7t	8.7t	8.7t	8.7t	8.7t	8.7t	8.7t	8.7t	8.7t	8.7t	8.7t	8.7t	

m	52.3	52.3	52.3	52.3	52.3	52.3	52.3	52.3	52.3	52.3	56.0	56.0	56.0	56.0	56.0	60.0	60.0	60.0	60.0	60.0						m
°	5	15	30	45	60	5	15	30	45	60	5	15	30	45	60	5	15	30	45	60						°
3.0																										3.0
3.5																										3.5
4.0																										4.0
4.5																										4.5
5.0																										5.0
6.0																										6.0
7.0																										7.0
8.0																										8.0
9.0																										9.0
10.0																										10.0
11.0																										11.0
12.0						2.0																				12.0
14.0	1.8					2.0					1.8															14.0
16.0	1.8	1.8				2.0	2.0				1.8	1.8				1.0										16.0
18.0	1.8	1.8				2.0	2.0				1.8	1.8				1.0	1.0									18.0
20.0	1.8	1.8	1.8			2.0	2.0	2.0			1.8	1.8				1.0	1.0									20.0
22.0	1.8	1.8	1.8			2.0	2.0	1.9			1.8	1.8	1.8			1.0	1.0	1.0								22.0
24.0	1.8	1.8	1.8	1.6		2.0	2.0	1.9	1.7		1.8	1.8	1.8	1.6		1.0	1.0	1.0								24.0
26.0	1.8	1.8	1.8	1.6	1.5	2.0	2.0	1.8	1.6	1.5	1.8	1.8	1.8	1.6	1.5	1.0	1.0	1.0	1.0							26.0
28.0	1.8	1.8	1.7	1.6	1.4	2.0	2.0	1.7	1.6	1.4	1.8	1.8	1.7	1.6	1.4	1.0	1.0	1.0	1.0	1.0						28.0
30.0	1.8	1.8	1.7	1.5		2.0	2.0	1.7	1.5		1.8	1.8	1.7	1.5		1.0	1.0	1.0	1.0	1.0						30.0
32.0	1.8	1.8	1.6	1.5		2.0	1.9	1.6	1.5		1.8	1.8	1.6	1.5		1.0	1.0	1.0	1.0							32.0
34.0	1.8	1.8	1.6	1.5		2.0	1.8	1.6	1.5		1.8	1.8	1.6	1.5		1.0	1.0	1.0	1.0							34.0
36.0	1.8	1.8	1.5	1.4		2.0	1.8	1.6	1.5		1.8	1.8	1.5	1.4		1.0	1.0	1.0	1.0							36.0
38.0	1.8	1.7	1.5	1.4		1.5	1.7	1.5	1.4		1.6	1.7	1.5	1.4			1.0	1.0	1.0							38.0
40.0	1.6	1.7	1.5	1.4			1.5	1.5	1.4			1.5	1.5	1.4				1.0	1.0							40.0
42.0	1.2	1.5	1.4					1.4					1.4	1.4				1.0	1.0							42.0
44.0	0.9	1.2	1.4																							44.0
46.0			1.1																							46.0
48.0																										48.0
50.0																										50.0
52.0																										52.0
54.0																										54.0
56.0																										56.0
58.0																										58.0
60.0																										60.0
64.0																										64.0
% 1	46	46	46	46	46	92	92	92	92	92	92	92	92	92	92	100	100	100	100	100						1
% 2	92	92	92	92	92	92	92	92	92	92	92	92	92	92	92	100	100	100	100	100						2
% 3	92	92	92	92	92	92	92	92	92	92	92	92	92	92	92	100	100	100	100	100						3
% 4	92	92	92	92	92	92	92	92	92	92	92	92	92	92	92	100	100	100	100	100						4
% 5	92	92	92	92	92	92	92	92	92	92	92	92	92	92	92	100	100	100	100	100						5
% 6	92	92	92	92	92	46	46	46	46	46	92	92	92	92	92	100	100	100	100	100						6
ID	28	28	28	28	28	39	39	39	39	39	29	29	29	29	29	19	19	19	19	19						ID
[DEG]	55~84.7	57~84.7	57~84.7	65~84.7	78~84.7	61~84.7	61~84.7	62~84.7	65~84.7	78~84.7	63~84.7	64~84.7	64~84.7	66~84.7	79~84.7	66~84.7	67~84.7	66~84.7	67~84.7	78~84.7						[DEG]
	1	1	1	1	1	1	1	1	1	1	1	1	1	1	1	1	1	1	1	1						
	8.7t	8.7t	8.7t	8.7t	8.7t	8.7t	8.7t	8.7t	8.7t	8.7t	8.7t	8.7t	8.7t	8.7t	8.7t	8.7t	8.7t	8.7t	8.7t	8.7t						

フルオートラフィングジブ

FLJ	1.6m + 7.4m	22.7 t	8.0m x 5.0m	360 °	JPN

m	11.4	11.4	11.4	11.4	11.4	15.1	15.1	15.1	15.1	15.1	15.1	15.1	15.1	15.1	15.1	15.1	15.1	15.1	15.1	15.1	18.8	18.8	18.8	18.8	18.8	m
°	5	15	30	45	60	5	15	30	45	60	5	15	30	45	60	5	15	30	45	60	5	15	30	45	60	°
3.0	7.3					7.3					7.3					7.3					7.3					3.0
3.5	7.3					7.3					7.3					7.3					7.3					3.5
4.0	7.3	7.3				7.3	7.3				7.3	7.3				7.3	7.3				7.3					4.0
4.5	7.3	7.3				7.3	7.3				7.3	7.3				7.3	7.3				7.3					4.5
5.0	7.3	7.3	7.3			7.3	7.3				7.3	7.3				7.3	7.3				7.3	7.3				5.0
6.0	7.3	7.3	7.3			7.3	7.3	7.3			7.3	7.3	7.3			7.3	7.3	7.3			7.3	7.3	7.3			6.0
7.0	7.3	7.3	7.3	6.5	5.0	7.3	7.3	7.3	6.7		7.3	7.3	7.3	6.7		7.3	7.3	7.3	6.7		7.3	7.3	7.3			7.0
8.0	7.3	7.3	7.3	6.3	4.9	7.3	7.3	7.3	6.5	5.0	7.3	7.3	7.3	6.5	5.0	7.3	7.3	7.3	6.5	5.0	7.3	7.3	7.3	6.6	5.0	8.0
9.0	7.3	7.3	7.2	6.0		7.3	7.3	7.3	6.3	4.9	7.3	7.3	7.3	6.3	4.9	7.3	7.3	7.3	6.3	4.9	7.3	7.3	7.3	6.4	4.9	9.0
10.0	7.3	7.3	6.9	5.9		7.3	7.3	7.3	6.1		7.3	7.3	7.3	6.1		7.3	7.3	7.3	6.1		7.3	7.3	7.3	6.3	4.9	10.0
11.0	7.3	7.3	6.6	5.7		7.3	7.3	7.0	5.9		7.3	7.3	7.0	5.9		7.3	7.3	7.0	5.9		7.3	7.3	7.3	6.1		11.0
12.0	7.3	7.0	6.3			7.3	7.3	6.8	5.8		7.3	7.3	6.8	5.8		7.3	7.3	6.8	5.8		7.3	7.3	7.2	6.0		12.0
14.0	6.4	6.2	5.9			7.3	7.1	6.3			7.3	7.1	6.3			7.3	7.1	6.3			7.3	7.3	6.7	5.7		14.0
16.0	5.7	5.7				6.8	6.4	5.9			6.8	6.4	5.9			6.8	6.4	5.9			7.3	7.1	6.3			16.0
18.0						6.0	5.9				6.0	5.9				6.0	5.9				7.0	6.6	6.0			18.0
20.0						5.5					5.5					5.5					6.3	6.1				20.0
22.0																					5.8	5.7				22.0
24.0																					5.0					24.0
26.0																										26.0
28.0																										28.0
30.0																										30.0
32.0																										32.0
34.0																										34.0
36.0																										36.0
38.0																										38.0
40.0																										40.0
42.0																										42.0
44.0																										44.0
46.0																										46.0
48.0																										48.0
50.0																										50.0
52.0																										52.0
54.0																										54.0
56.0																										56.0
58.0																										58.0
60.0																										60.0
64.0																										64.0
% 1	0	0	0	0	0	0	0	0	0	0	0	0	0	0	0	0	0	0	0	0	0	0	0	0	0	1
% 2	0	0	0	0	0	0	0	0	0	0	0	0	0	0	0	46	46	46	46	46	0	0	0	0	0	2
% 3	0	0	0	0	0	0	0	0	0	0	46	46	46	46	46	0	0	0	0	0	0	0	0	0	0	3
% 4	0	0	0	0	0	46	46	46	46	46	0	0	0	0	0	0	0	0	0	0	0	0	0	0	0	4
% 5	0	0	0	0	0	0	0	0	0	0	0	0	0	0	0	0	0	0	0	0	46	46	46	46	46	5
% 6	0	0	0	0	0	0	0	0	0	0	0	0	0	0	0	0	0	0	0	0	46	46	46	46	46	6
ID	1	1	1	1	1	76	76	76	76	76	105	105	105	105	105	131	131	131	131	131	30	30	30	30	30	ID
[DEG]	0~84.7	0~84.7	0~84.7	0~84.7	0~84.7	24~84.7	37~84.7	48~84.7	64~84.7	75~84.7	24~84.7	37~84.7	48~84.7	64~84.7	75~84.7	24~84.7	37~84.7	48~84.7	64~84.7	75~84.7	21~84.7	34~84.7	50~84.7	63~84.7	75~84.7	[DEG]
	1	1	1	1	1	1	1	1	1	1	1	1	1	1	1	1	1	1	1	1	1	1	1	1	1	
	8.7t	8.7t	8.7t	8.7t	8.7t	8.7t	8.7t	8.7t	8.7t	8.7t	8.7t	8.7t	8.7t	8.7t	8.7t	8.7t	8.7t	8.7t	8.7t	8.7t	8.7t	8.7t	8.7t	8.7t	8.7t	

m	18.8	18.8	18.8	18.8	18.8	18.8	18.8	18.8	18.8	18.8	18.8	18.8	18.8	18.8	18.8	22.6	22.6	22.6	22.6	22.6	26.3	26.3	26.3	26.3	26.3	m
°	5	15	30	45	60	5	15	30	45	60	5	15	30	45	60	5	15	30	45	60	5	15	30	45	60	°
3.0	7.3					7.3					7.3															3.0
3.5	7.3					7.3					7.3															3.5
4.0	7.3					7.3	7.3				7.3	7.3				7.3										4.0
4.5	7.3					7.3	7.3				7.3	7.3				7.3										4.5
5.0	7.3	7.3				7.3	7.3				7.3	7.3				7.3	7.3				7.3					5.0
6.0	7.3	7.3	7.3			7.3	7.3	7.3			7.3	7.3	7.3			7.3	7.3				7.3	7.3				6.0
7.0	7.3	7.3	7.3	6.9		7.3	7.3	7.3	6.9		7.3	7.3	7.3	6.9		7.3	7.3	7.3			7.3	7.3				7.0
8.0	7.3	7.3	7.3	6.6	5.0	7.3	7.3	7.3	6.6	5.0	7.3	7.3	7.3	6.6	5.0	7.3	7.3	7.3	6.8		7.3	7.3	7.3			8.0
9.0	7.3	7.3	7.3	6.4	4.9	7.3	7.3	7.3	6.4	4.9	7.3	7.3	7.3	6.4	4.9	7.3	7.3	7.3	6.6	5.0	7.3	7.3	7.3	6.7	5.0	9.0
10.0	7.3	7.3	7.3	6.3	4.9	7.3	7.3	7.3	6.3	4.9	7.3	7.3	7.3	6.3	4.9	7.3	7.3	7.3	6.4	4.9	7.3	7.3	7.3	6.5	4.9	10.0
11.0	7.3	7.3	7.3	6.1		7.3	7.3	7.3	6.1		7.3	7.3	7.3	6.1		7.3	7.3	7.3	6.3	4.8	7.3	7.3	7.3	6.4	4.9	11.0
12.0	7.3	7.3	7.2	6.0		7.3	7.3	7.2	6.0		7.3	7.3	7.2	6.0		7.3	7.3	7.3	6.1		7.3	7.3	7.3	6.3	4.8	12.0
14.0	7.3	7.3	6.7	5.7		7.3	7.3	6.7	5.7		7.3	7.3	6.7	5.7		7.2	6.9	6.5	5.9		7.3	7.3	7.3	6.0		14.0
16.0	7.3	7.1	6.3			7.3	7.1	6.3			7.3	7.1	6.3			6.4	6.1	5.9	5.7		7.3	7.3	7.0	5.8		16.0
18.0	7.0	6.6	6.0			7.0	6.6	6.0			7.0	6.6	6.0			5.7	5.5	5.3			6.1	6.4	6.6	5.7		18.0
20.0	6.3	6.1				6.3	6.1				6.0	6.1				5.1	5.0	4.9			4.6	4.9	5.3			20.0
22.0	5.6	5.7				5.3	5.4				4.9	5.0				4.6	4.5	4.5			3.5	3.7	4.0			22.0
24.0	4.7					4.3					3.9					4.2	4.1				2.6	2.8	3.0			24.0
26.0																3.8	3.8				1.8	2.0				26.0
28.0																					1.1	1.3				28.0
30.0																										30.0
32.0																										32.0
34.0																										34.0
36.0																										36.0
38.0																										38.0
40.0																										40.0
42.0																										42.0
44.0																										44.0
46.0																										46.0
48.0																										48.0
50.0																										50.0
52.0																										52.0
54.0																										54.0
56.0																										56.0
58.0																										58.0
60.0																										60.0
64.0																										64.0
% 1	0	0	0	0	0	0	0	0	0	0	0	0	0	0	0	0	0	0	0	0	92	92	92	92	92	1
% 2	0	0	0	0	0	0	0	0	0	0	46	46	46	46	46	0	0	0	0	0	92	92	92	92	92	2
% 3	0	0	0	0	0	46	46	46	46	46	46	46	46	46	46	0	0	0	0	0	0	0	0	0	0	3
% 4	46	46	46	46	46	46	46	46	46	46	0	0	0	0	0	0	0	0	0	0	0	0	0	0	0	4
% 5	46	46	46	46	46	0	0	0	0	0	0	0	0	0	0	46	46	46	46	46	0	0	0	0	0	5
% 6	0	0	0	0	0	0	0	0	0	0	0	0	0	0	0	92	92	92	92	92	0	0	0	0	0	6
ID	58	58	58	58	58	88	88	88	88	88	113	113	113	113	113	20	20	20	20	20	134	134	134	134	134	ID
[DEG]	21~84.7	33~84.7	50~84.7	63~84.7	75~84.7	21~84.7	33~84.7	50~84.7	63~84.7	75~84.7	21~84.7	33~84.7	50~84.7	63~84.7	75~84.7	29~84.7	30~84.7	46~84.7	63~84.7	76~84.7	33~84.7	34~84.7	47~84.7	63~84.7	76~84.7	[DEG]
	1	1	1	1	1	1	1	1	1	1	1	1	1	1	1	1	1	1	1	1	1	1	1	1	1	
	8.7t	8.7t	8.7t	8.7t	8.7t	8.7t	8.7t	8.7t	8.7t	8.7t	8.7t	8.7t	8.7t	8.7t	8.7t	8.7t	8.7t	8.7t	8.7t	8.7t	8.7t	8.7t	8.7t	8.7t	8.7t	

FLJ	1.6m + 7.4m	22.7 t	8.0m x 5.0m	360 °	JPN

m	30.0	30.0	30.0	30.0	30.0	30.0	30.0	30.0	30.0	30.0	33.7	33.7	33.7	33.7	33.7	37.4	37.4	37.4	37.4	37.4	37.4	37.4	37.4	37.4	37.4	m
°	5	15	30	45	60	5	15	30	45	60	5	15	30	45	60	5	15	30	45	60	5	15	30	45	60	°
3.0																										3.0
3.5																										3.5
4.0																										4.0
4.5																										4.5
5.0	7.3					7.3																				5.0
6.0	7.3	7.3				7.3	7.3				7.3															6.0
7.0	7.3	7.3				7.3	7.3				7.3	7.3				7.1					7.3					7.0
8.0	7.3	7.3	7.3			7.3	7.3	7.3			7.3	7.3				7.1	7.1				7.3	7.3				8.0
9.0	7.3	7.3	7.3			7.3	7.3	7.3	6.8		7.3	7.3	7.3			7.1	7.1				7.3	7.3				9.0
10.0	7.3	7.3	7.3	6.6	5.0	7.3	7.3	7.3	6.6	5.0	7.3	7.3	7.3	6.7		7.1	7.1	7.1			7.3	7.3	7.3			10.0
11.0	7.3	7.3	7.3	6.5	4.9	7.3	7.3	7.3	6.5	4.9	7.3	7.3	7.3	6.6	4.9	7.1	7.1	7.1	6.7	5.0	7.3	7.3	7.2	6.7		11.0
12.0	7.3	7.3	7.1	6.4	4.9	7.3	7.3	7.3	6.4	4.9	7.3	7.3	7.3	6.5	4.9	7.1	7.1	7.1	6.6	4.9	7.3	7.3	6.9	6.4	4.9	12.0
14.0	6.8	6.6	6.3	6.1		7.3	7.3	7.3	6.1		7.3	7.3	7.3	6.2	4.8	7.1	7.1	7.1	6.3	4.8	6.9	6.6	6.2	5.9	4.8	14.0
16.0	6.0	5.8	5.6	5.5		7.3	7.3	7.2	5.9		7.3	7.3	7.3	6.0		7.1	7.1	7.1	6.1		6.1	5.9	5.7	5.5		16.0
18.0	5.3	5.2	5.1	5.0		6.1	6.4	6.9	5.8		6.1	6.5	6.9	5.9		6.2	6.6	7.1	6.0		5.5	5.4	5.2	5.0		18.0
20.0	4.8	4.7	4.6	4.5		4.6	4.9	5.3	5.6		4.6	5.0	5.4	5.7		4.8	5.1	5.5	5.8		5.0	4.9	4.7	4.6		20.0
22.0	4.3	4.3	4.2			3.5	3.8	4.1			3.5	3.8	4.1	4.4		3.6	3.9	4.3	4.5		4.6	4.5	4.3	4.3		22.0
24.0	3.9	3.9	3.8			2.6	2.8	3.0			2.6	2.8	3.1			2.7	2.9	3.2	3.4		4.2	4.1	4.0	4.0		24.0
26.0	3.5	3.5	3.5			1.8	2.0	2.2			1.8	2.0	2.2			1.9	2.1	2.4			3.9	3.8	3.7			26.0
28.0	3.2	3.1				1.1	1.3				1.1	1.3	1.5			1.3	1.4	1.7			3.3	3.4	3.5			28.0
30.0	2.8	2.8											0.9								2.7	2.8	2.9			30.0
32.0	2.5	2.5																			2.2	2.3	2.4			32.0
34.0	2.0																				1.8	1.8				34.0
36.0																					1.4	1.4				36.0
38.0																					1.0	1.1				38.0
40.0																										40.0
42.0																										42.0
44.0																										44.0
46.0																										46.0
48.0																										48.0
50.0																										50.0
52.0																										52.0
54.0																										54.0
56.0																										56.0
58.0																										58.0
60.0																										60.0
64.0																										64.0
1	0	0	0	0	0	92	92	92	92	92	92	92	92	92	92	92	92	92	92	92	0	0	0	0	0	1
2	0	0	0	0	0	92	92	92	92	92	92	92	92	92	92	92	92	92	92	92	0	0	0	0	0	2
3	0	0	0	0	0	46	46	46	46	46	92	92	92	92	92	92	92	92	92	92	46	46	46	46	46	3
4	46	46	46	46	46	0	0	0	0	0	0	0	0	0	0	46	46	46	46	46	92	92	92	92	92	4
5	92	92	92	92	92	0	0	0	0	0	0	0	0	0	0	0	0	0	0	0	92	92	92	92	92	5
6	92	92	92	92	92	0	0	0	0	0	0	0	0	0	0	0	0	0	0	0	92	92	92	92	92	6
ID	22	22	22	22	22	116	116	116	116	116	110	110	110	110	110	93	93	93	93	93	24	24	24	24	24	ID
[DEG]	24~84.7	32~84.7	50~84.7	63~84.7	78~84.7	41~84.7	43~84.7	49~84.7	63~84.7	78~84.7	47~84.7	49~84.7	46~84.7	62~84.7	76~84.7	52~84.7	53~84.7	55~84.7	62~84.7	78~84.7	33~84.7	34~84.7	48~84.7	63~84.7	78~84.7	[DEG]
	1	1	1	1	1	1	1	1	1	1	1	1	1	1	1	1	1	1	1	1	1	1	1	1	1	
	8.7t	8.7t	8.7t	8.7t	8.7t	8.7t	8.7t	8.7t	8.7t	8.7t	8.7t	8.7t	8.7t	8.7t	8.7t	8.7t	8.7t	8.7t	8.7t	8.7t	8.7t	8.7t	8.7t	8.7t	8.7t	

m	41.2	41.2	41.2	41.2	41.2	44.9	44.9	44.9	44.9	44.9	44.9	44.9	44.9	44.9	44.9	48.6	48.6	48.6	48.6	48.6	48.6	48.6	48.6	48.6	48.6	m
°	5	15	30	45	60	5	15	30	45	60	5	15	30	45	60	5	15	30	45	60	5	15	30	45	60	°
3.0																										3.0
3.5																										3.5
4.0																										4.0
4.5																										4.5
5.0																										5.0
6.0																										6.0
7.0	7.3																									7.0
8.0	7.3										6.5															8.0
9.0	7.3	7.3				4.6					6.5					4.8					5.4					9.0
10.0	7.3	7.3	7.3			4.6	4.6				6.5	6.5				4.8					5.4					10.0
11.0	7.3	7.3	7.3			4.6	4.6				6.5	6.5	6.5			4.8	4.8				5.4	5.4				11.0
12.0	7.3	7.3	7.3	6.6	4.9	4.6	4.6	4.6			6.5	6.5	6.5			4.8	4.8	4.8			5.4	5.4	5.4			12.0
14.0	7.3	7.3	7.3	6.4	4.9	4.6	4.6	4.6	4.6	4.6	6.5	6.5	6.5	6.5	4.9	4.8	4.8	4.8	4.8	4.8	5.4	5.4	5.4	5.4	4.9	14.0
16.0	7.3	7.3	7.3	6.2		4.6	4.6	4.6	4.6	4.6	6.5	6.5	6.5	6.3	4.8	4.8	4.8	4.8	4.8	4.8	5.4	5.4	5.4	5.4	4.8	16.0
18.0	6.3	6.7	7.2	6.1		4.6	4.6	4.6	4.6		6.5	6.5	6.5	6.1		4.8	4.8	4.8	4.8		5.4	5.4	5.4	5.4		18.0
20.0	4.8	5.2	5.6	5.9		4.6	4.6	4.6	4.6		5.0	5.3	5.8	6.0		4.8	4.8	4.8	4.8		5.2	5.4	5.4	5.4		20.0
22.0	3.7	4.0	4.4	4.6		4.6	4.5	4.3	4.2		3.9	4.2	4.5	4.8		4.6	4.8	4.8	4.7		4.0	4.3	4.7	5.0		22.0
24.0	2.8	3.0	3.3	3.6		4.3	4.2	4.0	4.0		2.9	3.2	3.5	3.7		3.6	3.9	4.1	4.4		3.1	3.3	3.7	3.9		24.0
26.0	2.0	2.2	2.5	2.7		3.5	3.7	3.8	3.7		2.2	2.4	2.7	2.9		2.8	3.0	3.3	3.5		2.3	2.5	2.8	3.0		26.0
28.0		1.5	1.8			2.8	3.0	3.2	3.3			1.7	2.0	2.1		2.2	2.4	2.6	2.7			1.8	2.1	2.3		28.0
30.0						2.3	2.4	2.6								1.6	1.8	2.0	2.1					1.6		30.0
32.0						1.8	1.9	2.1										1.4								32.0
34.0						1.4	1.5	1.6																		34.0
36.0						1.0	1.1	1.2																		36.0
38.0																										38.0
40.0																										40.0
42.0																										42.0
44.0																										44.0
46.0																										46.0
48.0																										48.0
50.0																										50.0
52.0																										52.0
54.0																										54.0
56.0																										56.0
58.0																										58.0
60.0																										60.0
64.0																										64.0
1	92	92	92	92	92	0	0	0	0	0	92	92	92	92	92	46	46	46	46	46	92	92	92	92	92	1
2	92	92	92	92	92	46	46	46	46	46	92	92	92	92	92	92	92	92	92	92	92	92	92	92	92	2
3	92	92	92	92	92	92	92	92	92	92	92	92	92	92	92	92	92	92	92	92	92	92	92	92	92	3
4	92	92	92	92	92	92	92	92	92	92	92	92	92	92	92	92	92	92	92	92	92	92	92	92	92	4
5	0	0	0	0	0	92	92	92	92	92	46	46	46	46	46	92	92	92	92	92	92	92	92	92	92	5
6	0	0	0	0	0	92	92	92	92	92	0	0	0	0	0	46	46	46	46	46	0	0	0	0	0	6
ID	83	83	83	83	83	26	26	26	26	26	65	65	65	65	65	38	38	38	38	38	49	49	49	49	49	ID
[DEG]	58~84.7	57~84.7	58~84.7	62~84.7	79~84.7	48~84.7	49~84.7	50~84.7	63~84.7	78~84.7	61~84.7	60~84.7	61~84.7	62~84.7	78~84.7	59~84.7	60~84.7	59~84.7	62~84.7	79~84.7	64~84.7	63~84.7	64~84.7	62~84.7	79~84.7	[DEG]
	1	1	1	1	1	1	1	1	1	1	1	1	1	1	1	1	1	1	1	1	1	1	1	1	1	
	8.7t	8.7t	8.7t	8.7t	8.7t	8.7t	8.7t	8.7t	8.7t	8.7t	8.7t	8.7t	8.7t	8.7t	8.7t	8.7t	8.7t	8.7t	8.7t	8.7t	8.7t	8.7t	8.7t	8.7t	8.7t	

フルオートラフィングジブ

FLJ	1.6m + 7.4m	22.7 t	8.0m x 5.0m	360 °	JPN

m	52.3	52.3	52.3	52.3	52.3	52.3	52.3	52.3	52.3	52.3	56.0	56.0	56.0	56.0	56.0	60.0	60.0	60.0	60.0	60.0						m
°	5	15	30	45	60	5	15	30	45	60	5	15	30	45	60	5	15	30	45	60						°
3.0																										3.0
3.5																										3.5
4.0																										4.0
4.5																										4.5
5.0																										5.0
6.0																										6.0
7.0																										7.0
8.0																										8.0
9.0																										9.0
10.0	3.9					4.4																				10.0
11.0	3.9					4.4					3.7															11.0
12.0	3.9	3.9				4.4	4.4				3.7															12.0
14.0	3.9	3.9	3.9			4.4	4.4	4.4			3.7	3.7	3.7			3.2	3.2									14.0
16.0	3.9	3.9	3.9	3.9	3.9	4.4	4.4	4.4	4.4	4.4	3.7	3.7	3.7	3.7	3.7	3.2	3.2	3.2	3.2							16.0
18.0	3.9	3.9	3.9	3.9	3.9	4.4	4.4	4.4	4.4	4.4	3.7	3.7	3.7	3.7	3.7	3.2	3.2	3.2	3.2	3.2						18.0
20.0	3.9	3.9	3.9	3.9		4.4	4.4	4.4	4.4		3.7	3.7	3.7	3.7		3.2	3.2	3.2	3.2	3.2						20.0
22.0	3.9	3.9	3.9	3.9		4.2	4.4	4.4	4.4		3.7	3.7	3.7	3.7		3.2	3.2	3.2	3.2							22.0
24.0	3.8	3.9	3.9	3.9		3.3	3.5	3.8	4.1		3.4	3.7	3.7	3.7		3.2	3.2	3.2	3.2							24.0
26.0	3.0	3.2	3.5	3.6		2.5	2.7	3.0	3.2		2.6	2.9	3.2	3.4		2.6	2.8	3.1	3.2							26.0
28.0	2.3	2.5	2.7	2.9		1.8	2.0	2.3	2.5		2.0	2.2	2.4	2.6				2.4	2.6							28.0
30.0	1.8	1.9	2.1	2.3					1.8				1.8	2.0												30.0
32.0		1.4	1.6																							32.0
34.0																										34.0
36.0																										36.0
38.0																										38.0
40.0																										40.0
42.0																										42.0
44.0																										44.0
46.0																										46.0
48.0																										48.0
50.0																										50.0
52.0																										52.0
54.0																										54.0
56.0																										56.0
58.0																										58.0
60.0																										60.0
64.0																										64.0
1	46	46	46	46	46	92	92	92	92	92	92	92	92	92	92	100	100	100	100	100						1
2	92	92	92	92	92	92	92	92	92	92	92	92	92	92	92	100	100	100	100	100						2
3	92	92	92	92	92	92	92	92	92	92	92	92	92	92	92	100	100	100	100	100						3
4	92	92	92	92	92	92	92	92	92	92	92	92	92	92	92	100	100	100	100	100						4
5	92	92	92	92	92	92	92	92	92	92	92	92	92	92	92	100	100	100	100	100						5
6	92	92	92	92	92	46	46	46	46	46	92	92	92	92	92	100	100	100	100	100						6
ID	28	28	28	28	28	39	39	39	39	39	29	29	29	29	29	19	19	19	19	19						ID
[DEG]	62~84.7	61~84.7	62~84.7	65~84.7	78~84.7	64~84.7	65~84.7	66~84.7	65~84.7	78~84.7	66~84.7	67~84.7	66~84.7	67~84.7	79~84.7	70~84.7	71~84.7	70~84.7	71~84.7	79~84.7						[DEG]
	1	1	1	1	1	1	1	1	1	1	1	1	1	1	1	1	1	1	1	1						
	8.7t	8.7t	8.7t	8.7t	8.7t	8.7t	8.7t	8.7t	8.7t	8.7t	8.7t	8.7t	8.7t	8.7t	8.7t	8.7t	8.7t	8.7t	8.7t	8.7t						

FLJ	1.6m + 12.4m	22.7 t	8.0m x 5.0m	360 °	JPN

m	11.4	11.4	11.4	11.4	11.4	15.1	15.1	15.1	15.1	15.1	15.1	15.1	15.1	15.1	15.1	15.1	15.1	15.1	15.1	15.1	18.8	18.8	18.8	18.8	18.8	m
°	5	15	30	45	60	5	15	30	45	60	5	15	30	45	60	5	15	30	45	60	5	15	30	45	60	°
3.0	4.3																									3.0
3.5	4.3																									3.5
4.0	4.3					4.3					4.3					4.3					4.3					4.0
4.5	4.3					4.3					4.3					4.3					4.3					4.5
5.0	4.3					4.3					4.3					4.3					4.3					5.0
6.0	4.3	4.3				4.3	4.3				4.3	4.3				4.3	4.3				4.3					6.0
7.0	4.3	4.3				4.3	4.3				4.3	4.3				4.3	4.3				4.3	4.3				7.0
8.0	4.3	4.3				4.3	4.3				4.3	4.3				4.3	4.3				4.3	4.3				8.0
9.0	4.3	4.3	4.3			4.3	4.3	4.3			4.3	4.3	4.3			4.3	4.3	4.3			4.3	4.3				9.0
10.0	4.3	4.3	4.1			4.3	4.3	4.3			4.3	4.3	4.3			4.3	4.3	4.3			4.3	4.3	4.3			10.0
11.0	4.3	4.3	3.9	3.2		4.3	4.3	4.1	3.3		4.3	4.3	4.1	3.3		4.3	4.3	4.1	3.3		4.3	4.3	4.1			11.0
12.0	4.3	4.3	3.7	3.1		4.3	4.3	3.9	3.2		4.3	4.3	3.9	3.2		4.3	4.3	3.9	3.2		4.3	4.3	3.9	3.3		12.0
14.0	4.3	4.0	3.3	2.9		4.3	4.3	3.5	3.0		4.3	4.3	3.5	3.0		4.3	4.3	3.5	3.0		4.3	4.3	3.7	3.1		14.0
16.0	3.8	3.5	3.0	2.7		4.3	3.9	3.3	2.8		4.3	3.9	3.3	2.8		4.3	3.9	3.3	2.8		4.3	4.1	3.4	2.9		16.0
18.0	3.4	3.2	2.8			3.9	3.6	3.0	2.7		3.9	3.6	3.0	2.7		3.9	3.6	3.0	2.7		4.3	3.8	3.2	2.8		18.0
20.0	3.0	2.9				3.5	3.3	2.9			3.5	3.3	2.9			3.5	3.3	2.9			4.0	3.5	3.0	2.7		20.0
22.0	2.7					3.2	3.0				3.2	3.0				3.2	3.0				3.6	3.3	2.9			22.0
24.0						2.9	2.8				2.9	2.8				2.9	2.8				3.3	3.1	2.8			24.0
26.0																					3.0	2.9				26.0
28.0																					2.8					28.0
30.0																										30.0
32.0																										32.0
34.0																										34.0
36.0																										36.0
38.0																										38.0
40.0																										40.0
42.0																										42.0
44.0																										44.0
46.0																										46.0
48.0																										48.0
50.0																										50.0
52.0																										52.0
54.0																										54.0
56.0																										56.0
58.0																										58.0
60.0																										60.0
64.0																										64.0
1	0	0	0	0		0	0	0	0		0	0	0	0		0	0	0	0		0	0	0	0		1
2	0	0	0	0		0	0	0	0		0	0	0	0		46	46	46	46		0	0	0	0		2
3	0	0	0	0		0	0	0	0		46	46	46	46		0	0	0	0		0	0	0	0		3
4	0	0	0	0		46	46	46	46		0	0	0	0		0	0	0	0		0	0	0	0		4
5	0	0	0	0		0	0	0	0		0	0	0	0		0	0	0	0		46	46	46	46		5
6	0	0	0	0		0	0	0	0		0	0	0	0		0	0	0	0		46	46	46	46		6
ID	1	1	1	1		76	76	76	76		105	105	105	105		131	131	131	131		30	30	30	30		ID
[DEG]	0~84.7	0~84.7	0~84.7	0~84.7		29~84.7	32~84.7	51~84.7	60~84.7		29~84.7	31~84.7	51~84.7	60~84.7		29~84.7	31~84.7	51~84.7	60~84.7		26~84.7	37~84.7	46~84.7	60~84.7		[DEG]
	1	1	1	1		1	1	1	1		1	1	1	1		1	1	1	1		1	1	1	1		
	8.7t	8.7t	8.7t	8.7t		8.7t	8.7t	8.7t	8.7t		8.7t	8.7t	8.7t	8.7t		8.7t	8.7t	8.7t	8.7t		8.7t	8.7t	8.7t	8.7t		

FLJ	1.6m + 12.4m	22.7 t	8.0m x 5.0m	360 °	JPN

m	18.8	18.8	18.8	18.8	18.8	18.8	18.8	18.8	18.8	18.8	18.8	18.8	18.8	18.8	18.8	22.6	22.6	22.6	22.6	22.6	26.3	26.3	26.3	26.3	26.3	m
°	5	15	30	45	60	5	15	30	45	60	5	15	30	45	60	5	15	30	45	60	5	15	30	45	60	°
m 3.0																										3.0
3.5																										3.5
4.0	4.3					4.3					4.3															4.0
4.5	4.3					4.3					4.3															4.5
5.0	4.3					4.3					4.3					4.3										5.0
6.0	4.3					4.3					4.3					4.3					4.3					6.0
7.0	4.3	4.3				4.3	4.3				4.3	4.3				4.3	4.3				4.3					7.0
8.0	4.3	4.3				4.3	4.3				4.3	4.3				4.3	4.3				4.3	4.3				8.0
9.0	4.3	4.3				4.3	4.3				4.3	4.3				4.3	4.3				4.3	4.3				9.0
10.0	4.3	4.3	4.3			4.3	4.3	4.3			4.3	4.3	4.3			4.3	4.3				4.3	4.3				10.0
11.0	4.3	4.3	4.1			4.3	4.3	4.2			4.3	4.3	4.2			4.3	4.3	4.1			4.3	4.3	4.3			11.0
12.0	4.3	4.3	4.0	3.3		4.3	4.3	4.0	3.3		4.3	4.3	4.0	3.3		4.3	4.3	4.0			4.3	4.3	4.2			12.0
14.0	4.3	4.3	3.7	3.1		4.3	4.3	3.7	3.1		4.3	4.3	3.7	3.1		4.3	4.3	3.7	3.1		4.3	4.3	3.9	3.2	2.7	14.0
16.0	4.3	4.1	3.5	2.9		4.3	4.2	3.5	2.9		4.3	4.2	3.5	2.9		4.3	4.2	3.5	3.0		4.3	4.3	3.7	3.0	2.6	16.0
18.0	4.3	3.8	3.2	2.8		4.3	3.8	3.2	2.8		4.3	3.9	3.2	2.8		4.3	3.9	3.3	2.9		4.3	4.2	3.5	2.9		18.0
20.0	4.0	3.6	3.0	2.7		4.0	3.6	3.0	2.7		4.0	3.6	3.0	2.7		4.2	3.7	3.1	2.8		4.3	4.0	3.3	2.8		20.0
22.0	3.6	3.3	2.9			3.6	3.3	2.9			3.6	3.3	2.9			3.9	3.4	3.0			4.3	3.7	3.2	2.7		22.0
24.0	3.3	3.1	2.8			3.3	3.1	2.8			3.3	3.1	2.8			3.6	3.3	2.9			3.5	3.5	3.0			24.0
26.0	3.0	2.9				3.0	2.9				3.0	2.9				3.4	3.1	2.8			2.7	3.0	2.9			26.0
28.0	2.8					2.8					2.8					3.2	3.0				2.1	2.3	2.6			28.0
30.0																2.9	2.8				1.5	1.7				30.0
32.0																2.7					1.0	1.2				32.0
34.0																										34.0
36.0																										36.0
38.0																										38.0
40.0																										40.0
42.0																										42.0
44.0																										44.0
46.0																										46.0
48.0																										48.0
50.0																										50.0
52.0																										52.0
54.0																										54.0
56.0																										56.0
58.0																										58.0
60.0																										60.0
64.0																										64.0
% 1	0	0	0	0		0	0	0	0		0	0	0	0		0	0	0	0		92	92	92	92	92	1
% 2	0	0	0	0		0	0	0	0		46	46	46	46		0	0	0	0		92	92	92	92	92	2
% 3	0	0	0	0		46	46	46	46		46	46	46	46		0	0	0	0		0	0	0	0	0	3
% 4	46	46	46	46		46	46	46	46		0	0	0	0		0	0	0	0		0	0	0	0	0	4
% 5	46	46	46	46		0	0	0	0		0	0	0	0		46	46	46	46		0	0	0	0	0	5
% 6	0	0	0	0		0	0	0	0		0	0	0	0		92	92	92	92		0	0	0	0	0	6
ID	58	58	58	58		88	88	88	88		113	113	113	113		20	20	20	20		134	134	134	134	134	ID
[DEG]	26~84.7	37~84.7	46~84.7	60~84.7		26~84.7	37~84.7	46~84.7	60~84.7		26~84.7	37~84.7	46~84.7	60~84.7		24~84.7	34~84.7	49~84.7	65~84.7		34~84.7	37~84.7	50~84.7	64~84.7	77~84.7	[DEG]
	1	1	1	1		1	1	1	1		1	1	1	1		1	1	1	1		1	1	1	1	1	
	8.7t	8.7t	8.7t	8.7t		8.7t	8.7t	8.7t	8.7t		8.7t	8.7t	8.7t	8.7t		8.7t	8.7t	8.7t	8.7t		8.7t	8.7t	8.7t	8.7t	8.7t	

m	30.0	30.0	30.0	30.0	30.0	30.0	30.0	30.0	30.0	30.0	33.7	33.7	33.7	33.7	33.7	37.4	37.4	37.4	37.4	37.4	37.4	37.4	37.4	37.4	37.4	m
°	5	15	30	45	60	5	15	30	45	60	5	15	30	45	60	5	15	30	45	60	5	15	30	45	60	°
m 3.0																										3.0
3.5																										3.5
4.0																										4.0
4.5																										4.5
5.0																										5.0
6.0	4.0					4.3																				6.0
7.0	4.0					4.3					4.3					4.1										7.0
8.0	4.0					4.3					4.3					4.1					4.3					8.0
9.0	4.0	4.0				4.3	4.3				4.3	4.3				4.1					4.3					9.0
10.0	4.0	4.0				4.3	4.3				4.3	4.3				4.1	4.1				4.3	4.3				10.0
11.0	4.0	4.0				4.3	4.3	4.3			4.3	4.3				4.1	4.1				4.3	4.3				11.0
12.0	4.0	4.0	4.0			4.3	4.3	4.2			4.3	4.3	4.2			4.1	4.1				4.3	4.3				12.0
14.0	4.0	4.0	3.7	3.2		4.3	4.3	3.9	3.2		4.3	4.3	3.9	3.3		4.1	4.1	3.9			4.3	4.3	3.7			14.0
16.0	4.0	4.0	3.5	3.1		4.3	4.3	3.7	3.1		4.3	4.3	3.7	3.2	2.6	4.1	4.1	3.7	3.2	2.6	4.3	4.3	3.5	3.1		16.0
18.0	4.0	4.0	3.4	3.0		4.3	4.3	3.5	3.0		4.3	4.3	3.6	3.0	2.6	4.1	4.1	3.6	3.1	2.6	4.3	4.1	3.4	3.0		18.0
20.0	4.0	3.8	3.2	2.9		4.3	4.1	3.4	2.9		4.3	4.1	3.4	2.9		4.1	4.1	3.4	3.0		4.3	3.9	3.2	2.9		20.0
22.0	4.0	3.6	3.1	2.8		4.3	3.8	3.2	2.8		4.3	3.9	3.3	2.8		4.1	3.9	3.3	2.9		4.2	3.7	3.1	2.8		22.0
24.0	3.7	3.4	3.0	2.7		3.4	3.6	3.1	2.7		3.4	3.7	3.1	2.8		3.4	3.8	3.2	2.8		3.9	3.5	3.0	2.7		24.0
26.0	3.4	3.3	2.9			2.7	3.0	3.0			2.6	2.9	3.0	2.7		2.6	3.0	3.0	2.7		3.6	3.4	2.9	2.7		26.0
28.0	3.1	3.1	2.8			2.0	2.3	2.6			1.9	2.2	2.6			2.0	2.3	2.7	2.7		3.3	3.2	2.8	2.6		28.0
30.0	2.8	2.8	2.7			1.4	1.7	2.0			1.4	1.6	2.0			1.4	1.7	2.1			3.1	3.0	2.7			30.0
32.0	2.5	2.5	2.5			0.9	1.1	1.4				1.1	1.4				1.2	1.5			2.7	2.8	2.7			32.0
34.0	2.2	2.2											0.9								2.2	2.4	2.6			34.0
36.0		2.0																			1.8	2.0	2.1			36.0
38.0																					1.5	1.6				38.0
40.0																					1.2	1.3				40.0
42.0																					0.9	1.0				42.0
44.0																										44.0
46.0																										46.0
48.0																										48.0
50.0																										50.0
52.0																										52.0
54.0																										54.0
56.0																										56.0
58.0																										58.0
60.0																										60.0
64.0																										64.0
% 1	0	0	0	0		92	92	92	92		92	92	92	92	92	92	92	92	92	92	0	0	0	0		1
% 2	0	0	0	0		92	92	92	92		92	92	92	92	92	92	92	92	92	92	0	0	0	0		2
% 3	0	0	0	0		46	46	46	46		92	92	92	92	92	92	92	92	92	92	46	46	46	46		3
% 4	46	46	46	46		0	0	0	0		0	0	0	0	0	46	46	46	46	46	92	92	92	92		4
% 5	92	92	92	92		0	0	0	0		0	0	0	0	0	0	0	0	0	0	92	92	92	92		5
% 6	92	92	92	92		0	0	0	0		0	0	0	0	0	0	0	0	0	0	92	92	92	92		6
ID	22	22	22	22		116	116	116	116		110	110	110	110	110	93	93	93	93	93	24	24	24	24		ID
[DEG]	39~84.7	36~84.7	47~84.7	64~84.7		42~84.7	44~84.7	46~84.7	64~84.7		51~84.7	49~84.7	48~84.7	64~84.7	77~84.7	54~84.7	53~84.7	56~84.7	64~84.7	79~84.7	34~84.7	36~84.7	50~84.7	64~84.7		[DEG]
	1	1	1	1		1	1	1	1		1	1	1	1	1	1	1	1	1	1	1	1	1	1		
	8.7t	8.7t	8.7t	8.7t		8.7t	8.7t	8.7t	8.7t		8.7t	8.7t	8.7t	8.7t	8.7t	8.7t	8.7t	8.7t	8.7t	8.7t	8.7t	8.7t	8.7t	8.7t		

フルオートラフィングジブ

FLJ	1.6m + 12.4m	22.7 t	8.0m x 5.0m	360 °	JPN

m	41.2	41.2	41.2	41.2	41.2	44.9	44.9	44.9	44.9	44.9	44.9	44.9	44.9	44.9	44.9	48.6	48.6	48.6	48.6	48.6	48.6	48.6	48.6	48.6	48.6	m
°	5	15	30	45	60	5	15	30	45	60	5	15	30	45	60	5	15	30	45	60	5	15	30	45	60	°
3.0																										3.0
3.5																										3.5
4.0																										4.0
4.5																										4.5
5.0																										5.0
6.0																										6.0
7.0																										7.0
8.0	4.3																									8.0
9.0	4.3										4.0															9.0
10.0	4.3					3.0					4.0					3.2					3.6					10.0
11.0	4.3	4.3				3.0					4.0	4.0				3.2					3.6					11.0
12.0	4.3	4.3				3.0	3.0				4.0	4.0				3.2	3.2				3.6	3.6				12.0
14.0	4.3	4.3	3.9			3.0	3.0				4.0	4.0				3.2	3.2				3.6	3.6				14.0
16.0	4.3	4.3	3.7	3.2		3.0	3.0	3.0			4.0	4.0	3.7			3.2	3.2	3.2			3.6	3.6	3.6			16.0
18.0	4.3	4.3	3.5	3.1	2.6	3.0	3.0	3.0	2.9		4.0	4.0	3.5	3.0	2.6	3.2	3.2	3.2	3.0		3.6	3.6	3.5	3.0		18.0
20.0	4.3	4.1	3.4	3.0	2.6	3.0	3.0	3.0	2.9		4.0	4.0	3.4	2.9	2.6	3.2	3.2	3.2	2.9	2.6	3.6	3.6	3.3	2.9	2.6	20.0
22.0	4.3	4.0	3.3	2.9		3.0	3.0	3.0	2.8		4.0	3.9	3.2	2.9		3.2	3.2	3.2	2.8	2.5	3.6	3.6	3.2	2.8	2.5	22.0
24.0	3.5	3.8	3.2	2.8		3.0	3.0	3.0	2.7		3.6	3.7	3.1	2.8		3.2	3.2	3.1	2.7		3.6	3.6	3.1	2.8		24.0
26.0	2.7	3.1	3.0	2.7		3.0	3.0	2.9	2.6		2.8	3.2	3.0	2.7		3.2	3.2	3.0	2.7		2.9	3.3	3.0	2.7		26.0
28.0	2.0	2.3	2.8	2.7		3.0	3.0	2.8	2.6		2.1	2.5	2.9	2.7		2.7	3.0	2.9	2.6		2.2	2.6	2.9	2.6		28.0
30.0	1.4	1.7	2.1	2.4		2.8	3.0	2.7	2.5		1.6	1.9	2.2	2.5		2.1	2.4	2.8	2.6		1.6	1.9	2.3	2.6		30.0
32.0			1.5			2.3	2.5	2.7	2.5				1.7	1.9		1.6	1.9	2.2	2.4				1.8	2.0		32.0
34.0						1.8	2.0	2.2									1.4	1.7	1.9					1.5		34.0
36.0						1.4	1.6	1.8										1.3								36.0
38.0						1.1	1.2	1.4																		38.0
40.0							0.9	1.1																		40.0
42.0																										42.0
44.0																										44.0
46.0																										46.0
48.0																										48.0
50.0																										50.0
52.0																										52.0
54.0																										54.0
56.0																										56.0
58.0																										58.0
60.0																										60.0
64.0																										64.0
% 1	92	92	92	92	92	0	0	0	0		92	92	92	92	92	46	46	46	46	46	92	92	92	92	92	1
% 2	92	92	92	92	92	46	46	46	46		92	92	92	92	92	92	92	92	92	92	92	92	92	92	92	2
% 3	92	92	92	92	92	92	92	92	92		92	92	92	92	92	92	92	92	92	92	92	92	92	92	92	3
% 4	92	92	92	92	92	92	92	92	92		92	92	92	92	92	92	92	92	92	92	92	92	92	92	92	4
% 5	0	0	0	0	0	92	92	92	92		46	46	46	46	46	92	92	92	92	92	92	92	92	92	92	5
% 6	0	0	0	0	0	92	92	92	92		0	0	0	0	0	46	46	46	46	46	0	0	0	0	0	6
ID	83	83	83	83	83	26	26	26	26		65	65	65	65	65	38	38	38	38	38	49	49	49	49	49	ID
[DEG]	58~84.7	60~84.7	59~84.7	64~84.7	78~84.7	51~84.7	50~84.7	52~84.7	64~84.7		60~84.7	63~84.7	62~84.7	64~84.7	79~84.7	61~84.7	60~84.7	60~84.7	64~84.7	78~84.7	63~84.7	65~84.7	65~84.7	64~84.7	78~84.7	[DEG]
	1	1	1	1	1	1	1	1	1		1	1	1	1	1	1	1	1	1	1	1	1	1	1	1	
	8.7t	8.7t	8.7t	8.7t	8.7t	8.7t	8.7t	8.7t	8.7t		8.7t	8.7t	8.7t	8.7t	8.7t	8.7t	8.7t	8.7t	8.7t	8.7t	8.7t	8.7t	8.7t	8.7t	8.7t	

m	52.3	52.3	52.3	52.3	52.3	52.3	52.3	52.3	52.3	52.3	56.0	56.0	56.0	56.0	56.0	60.0	60.0	60.0	60.0	60.0						m
°	5	15	30	45	60	5	15	30	45	60	5	15	30	45	60	5	15	30	45	60						°
3.0																										3.0
3.5																										3.5
4.0																										4.0
4.5																										4.5
5.0																										5.0
6.0																										6.0
7.0																										7.0
8.0																										8.0
9.0																										9.0
10.0																										10.0
11.0	2.7					3.0																				11.0
12.0	2.7					3.0					2.6															12.0
14.0	2.7	2.7				3.0	3.0				2.6	2.6				1.9										14.0
16.0	2.7	2.7	2.7			3.0	3.0	3.0			2.6	2.6				1.9	1.9									16.0
18.0	2.7	2.7	2.7			3.0	3.0	3.0			2.6	2.6	2.6			1.9	1.9	1.9								18.0
20.0	2.7	2.7	2.7	2.7	2.6	3.0	3.0	3.0	2.9	2.6	2.6	2.6	2.6	2.6		1.9	1.9	1.9	1.9							20.0
22.0	2.7	2.7	2.7	2.7	2.5	3.0	3.0	3.0	2.8	2.5	2.6	2.6	2.6	2.6	2.5	1.9	1.9	1.9	1.9	1.9						22.0
24.0	2.7	2.7	2.7	2.7		3.0	3.0	3.0	2.7		2.6	2.6	2.6	2.6	2.5	1.9	1.9	1.9	1.9	1.9						24.0
26.0	2.7	2.7	2.7	2.6		3.0	3.0	3.0	2.7		2.6	2.6	2.6	2.6		1.9	1.9	1.9	1.9							26.0
28.0	2.7	2.7	2.7	2.6		2.4	2.7	2.9	2.6		2.5	2.6	2.6	2.6		1.9	1.9	1.9	1.9							28.0
30.0	2.2	2.5	2.7	2.5		1.8	2.1	2.5	2.5		1.9	2.2	2.6	2.5			1.9	1.9	1.9							30.0
32.0	1.7	2.0	2.3	2.5				1.9	2.2				2.0	2.3				1.9	1.9							32.0
34.0		1.5	1.8	2.0					1.7					1.8												34.0
36.0			1.4	1.6																						36.0
38.0																										38.0
40.0																										40.0
42.0																										42.0
44.0																										44.0
46.0																										46.0
48.0																										48.0
50.0																										50.0
52.0																										52.0
54.0																										54.0
56.0																										56.0
58.0																										58.0
60.0																										60.0
64.0																										64.0
% 1	46	46	46	46	46	92	92	92	92	92	92	92	92	92	92	100	100	100	100	100						1
% 2	92	92	92	92	92	92	92	92	92	92	92	92	92	92	92	100	100	100	100	100						2
% 3	92	92	92	92	92	92	92	92	92	92	92	92	92	92	92	100	100	100	100	100						3
% 4	92	92	92	92	92	92	92	92	92	92	92	92	92	92	92	100	100	100	100	100						4
% 5	92	92	92	92	92	92	92	92	92	92	92	92	92	92	92	100	100	100	100	100						5
% 6	92	92	92	92	92	46	46	46	46	46	92	92	92	92	92	100	100	100	100	100						6
ID	28	28	28	28	28	39	39	39	39	39	29	29	29	29	29	19	19	19	19	19						ID
[DEG]	63~84.7	63~84.7	63~84.7	64~84.7	79~84.7	65~84.7	67~84.7	67~84.7	66~84.7	79~84.7	67~84.7	69~84.7	69~84.7	68~84.7	79~84.7	70~84.7	71~84.7	71~84.7	72~84.7	79~84.7						[DEG]
	1	1	1	1	1	1	1	1	1	1	1	1	1	1	1	1	1	1	1	1						
	8.7t	8.7t	8.7t	8.7t	8.7t	8.7t	8.7t	8.7t	8.7t	8.7t	8.7t	8.7t	8.7t	8.7t	8.7t	8.7t	8.7t	8.7t	8.7t	8.7t						

FLJ	1.6m + 17.4m	22.7 t	8.0m x 5.0m	360 °	JPN

m	11.4	11.4	11.4	11.4	11.4	15.1	15.1	15.1	15.1	15.1	15.1	15.1	15.1	15.1	15.1	15.1	15.1	15.1	15.1	15.1	18.8	18.8	18.8	18.8	18.8	m
°	5	15	30	45	60	5	15	30	45	60	5	15	30	45	60	5	15	30	45	60	5	15	30	45	60	°
m 3.0																										3.0
3.5																										3.5
4.0																										4.0
4.5	3.3																									4.5
5.0	3.3					3.1					3.3					3.3										5.0
6.0	3.3					3.1					3.3					3.3					2.7					6.0
7.0	3.3					3.1					3.3					3.3					2.7					7.0
8.0	3.3	3.3				3.1					3.3					3.3					2.7					8.0
9.0	3.3	3.3				3.1	3.1				3.3	3.3				3.3	3.3				2.7	2.7				9.0
10.0	3.3	3.2				3.1	3.1				3.3	3.3				3.3	3.3				2.7	2.7				10.0
11.0	3.3	3.0				3.1	3.1				3.3	3.1				3.3	3.1				2.7	2.7				11.0
12.0	3.2	2.9	2.5			3.1	2.9				3.3	2.9				3.3	3.0				2.7	2.7				12.0
14.0	2.9	2.6	2.3			3.1	2.7	2.3			3.1	2.7	2.3			3.1	2.7	2.3			2.7	2.7	2.3			14.0
16.0	2.6	2.4	2.1	1.8		2.8	2.5	2.2	1.9		2.8	2.5	2.2	1.9		2.8	2.5	2.2	1.9		2.7	2.5	2.2			16.0
18.0	2.4	2.2	1.9	1.7		2.6	2.3	2.0	1.8		2.6	2.3	2.0	1.8		2.6	2.3	2.0	1.8		2.7	2.4	2.0	1.8		18.0
20.0	2.2	2.0	1.8	1.6		2.4	2.1	1.9	1.7		2.4	2.1	1.9	1.7		2.4	2.1	1.9	1.7		2.5	2.2	1.9	1.7		20.0
22.0	2.0	1.9	1.7			2.2	2.0	1.8	1.6		2.2	2.0	1.8	1.6		2.2	2.0	1.8	1.6		2.3	2.1	1.8	1.6		22.0
24.0	1.8	1.7				2.1	1.9	1.7			2.1	1.9	1.7			2.1	1.9	1.7			2.2	2.0	1.8	1.6		24.0
26.0	1.7	1.6				1.9	1.8	1.6			1.9	1.8	1.6			1.9	1.8	1.6			2.0	1.9	1.7			26.0
28.0						1.8	1.6				1.8	1.6				1.8	1.6				1.9	1.8	1.6			28.0
30.0						1.6					1.6					1.6					1.9	1.7				30.0
32.0																					1.7	1.6				32.0
34.0																					1.6					34.0
36.0																										36.0
38.0																										38.0
40.0																										40.0
42.0																										42.0
44.0																										44.0
46.0																										46.0
48.0																										48.0
50.0																										50.0
52.0																										52.0
54.0																										54.0
56.0																										56.0
58.0																										58.0
60.0																										60.0
64.0																										64.0
% 1	0	0	0	0		0	0	0	0		0	0	0	0		0	0	0	0		0	0	0	0		1
% 2	0	0	0	0		0	0	0	0		0	0	0	0		46	46	46	46		0	0	0	0		2
% 3	0	0	0	0		0	0	0	0		46	46	46	46		0	0	0	0		0	0	0	0		3
% 4	0	0	0	0		46	46	46	46		0	0	0	0		0	0	0	0		0	0	0	0		4
% 5	0	0	0	0		0	0	0	0		0	0	0	0		0	0	0	0		46	46	46	46		5
% 6	0	0	0	0		0	0	0	0		0	0	0	0		0	0	0	0		46	46	46	46		6
ID	1	1	1	1		76	76	76	76		105	105	105	105		131	131	131	131		30	30	30	30		ID
[DEG]	0~84.7	0~84.7	0~84.7	0~84.7		23~84.7	36~84.7	47~84.7	63~84.7		23~84.7	36~84.7	47~84.7	63~84.7		23~84.7	36~84.7	47~84.7	63~84.7		21~84.7	33~84.7	49~84.7	63~84.7		[DEG]
	1	1	1	1		1	1	1	1		1	1	1	1		1	1	1	1		1	1	1	1		
	8.7t	8.7t	8.7t	8.7t		8.7t	8.7t	8.7t	8.7t		8.7t	8.7t	8.7t	8.7t		8.7t	8.7t	8.7t	8.7t		8.7t	8.7t	8.7t	8.7t		

m	18.8	18.8	18.8	18.8	18.8	18.8	18.8	18.8	18.8	18.8	18.8	18.8	18.8	18.8	18.8	22.6	22.6	22.6	22.6	22.6	26.3	26.3	26.3	26.3	26.3	m
°	5	15	30	45	60	5	15	30	45	60	5	15	30	45	60	5	15	30	45	60	5	15	30	45	60	°
m 3.0																										3.0
3.5																										3.5
4.0																										4.0
4.5																										4.5
5.0																										5.0
6.0	2.9					3.2					3.3					2.5										6.0
7.0	2.9					3.2					3.3					2.5					3.3					7.0
8.0	2.9					3.2					3.3					2.5					3.3					8.0
9.0	2.9	2.9				3.2	3.2				3.3	3.3				2.5					3.3					9.0
10.0	2.9	2.9				3.2	3.2				3.3	3.3				2.5	2.5				3.3	3.3				10.0
11.0	2.9	2.9				3.2	3.2				3.3	3.2				2.5	2.5				3.3	3.3				11.0
12.0	2.9	2.9				3.2	3.0				3.3	3.0				2.5	2.5				3.3	3.2				12.0
14.0	2.9	2.8	2.3			3.2	2.8	2.3			3.2	2.8	2.3			2.5	2.5	2.3			3.3	2.9	2.4			14.0
16.0	2.9	2.5	2.2	1.9		2.9	2.6	2.2	1.9		3.0	2.6	2.2	1.9		2.5	2.5	2.2			3.2	2.7	2.2			16.0
18.0	2.7	2.4	2.1	1.8		2.7	2.4	2.1	1.8		2.7	2.4	2.1	1.8		2.5	2.4	2.1	1.8		3.0	2.5	2.1	1.9		18.0
20.0	2.5	2.2	1.9	1.7		2.5	2.2	1.9	1.7		2.5	2.2	2.0	1.7		2.5	2.3	1.9	1.7		2.8	2.4	2.0	1.8		20.0
22.0	2.3	2.1	1.9	1.6		2.3	2.1	1.9	1.6		2.4	2.1	1.9	1.6		2.4	2.1	1.9	1.7		2.6	2.3	1.9	1.7		22.0
24.0	2.2	2.0	1.8	1.6		2.2	2.0	1.8	1.6		2.2	2.0	1.8	1.6		2.3	2.0	1.8	1.6		2.4	2.1	1.9	1.6		24.0
26.0	2.1	1.9	1.7			2.1	1.9	1.7			2.1	1.9	1.7			2.1	1.9	1.7	1.5		2.3	2.0	1.8	1.6		26.0
28.0	1.9	1.8	1.6			2.0	1.8	1.6			2.0	1.8	1.6			2.0	1.8	1.7			2.2	1.9	1.7	1.5		28.0
30.0	1.9	1.7				1.9	1.7				1.9	1.7				1.9	1.8	1.6			2.1	1.9	1.7			30.0
32.0	1.7	1.6				1.7	1.6				1.7	1.6				1.8	1.7				1.7	1.8	1.6			32.0
34.0	1.6					1.6					1.6					1.8	1.6				1.3	1.5	1.6			34.0
36.0																1.7					0.9	1.1				36.0
38.0																										38.0
40.0																										40.0
42.0																										42.0
44.0																										44.0
46.0																										46.0
48.0																										48.0
50.0																										50.0
52.0																										52.0
54.0																										54.0
56.0																										56.0
58.0																										58.0
60.0																										60.0
64.0																										64.0
% 1	0	0	0	0		0	0	0	0		0	0	0	0		0	0	0	0		92	92	92	92		1
% 2	0	0	0	0		0	0	0	0		46	46	46	46		0	0	0	0		92	92	92	92		2
% 3	0	0	0	0		46	46	46	46		46	46	46	46		0	0	0	0		0	0	0	0		3
% 4	46	46	46	46		46	46	46	46		0	0	0	0		0	0	0	0		0	0	0	0		4
% 5	46	46	46	46		0	0	0	0		0	0	0	0		46	46	46	46		0	0	0	0		5
% 6	0	0	0	0		0	0	0	0		0	0	0	0		92	92	92	92		0	0	0	0		6
ID	58	58	58	58		88	88	88	88		113	113	113	113		20	20	20	20		134	134	134	134		ID
[DEG]	21~84.7	32~84.7	49~84.7	63~84.7		21~84.7	32~84.7	49~84.7	63~84.7		20~84.7	32~84.7	49~84.7	63~84.7		28~84.7	37~84.7	51~84.7	63~84.7		36~84.7	39~84.7	47~84.7	62~84.7		[DEG]
	1	1	1	1		1	1	1	1		1	1	1	1		1	1	1	1		1	1	1	1		
	8.7t	8.7t	8.7t	8.7t		8.7t	8.7t	8.7t	8.7t		8.7t	8.7t	8.7t	8.7t		8.7t	8.7t	8.7t	8.7t		8.7t	8.7t	8.7t	8.7t		

フルオートラフィングジブ

FLJ	1.6m + 17.4m	22.7 t	8.0m x 5.0m	360 °	JPN

m	30.0	30.0	30.0	30.0	30.0	30.0	30.0	30.0	30.0	30.0	33.7	33.7	33.7	33.7	33.7	37.4	37.4	37.4	37.4	37.4	37.4	37.4	37.4	37.4	37.4	m
°	5	15	30	45	60	5	15	30	45	60	5	15	30	45	60	5	15	30	45	60	5	15	30	45	60	°
m 3.0																										3.0
3.5																										3.5
4.0																										4.0
4.5																										4.5
5.0																										5.0
6.0																										6.0
7.0																										7.0
8.0	2.3					3.2					3.1															8.0
9.0	2.3					3.2					3.1					2.4					2.5					9.0
10.0	2.3					3.2					3.1					2.4					2.5					10.0
11.0	2.3	2.3				3.2	3.2				3.1					2.4					2.5					11.0
12.0	2.3	2.3				3.2	3.2				3.1	3.1				2.4	2.4				2.5					12.0
14.0	2.3	2.3				3.2	2.9				3.1	3.0				2.4	2.4				2.5	2.5				14.0
16.0	2.3	2.3	2.2			3.2	2.8	2.3			3.1	2.8	2.3			2.4	2.4	2.2			2.5	2.5				16.0
18.0	2.3	2.3	2.1			3.1	2.6	2.2	1.9		3.1	2.6	2.2			2.4	2.4	2.2			2.5	2.5	2.1			18.0
20.0	2.3	2.3	2.0	1.8		2.9	2.4	2.1	1.8	1.5	2.9	2.5	2.1	1.8		2.4	2.4	2.1	1.8		2.5	2.4	2.0	1.8		20.0
22.0	2.3	2.2	1.9	1.7		2.7	2.3	2.0	1.7	1.5	2.7	2.3	2.0	1.8		2.4	2.4	2.0	1.8	1.5	2.5	2.2	1.9	1.7	1.5	22.0
24.0	2.3	2.1	1.8	1.7		2.5	2.2	1.9	1.7		2.6	2.2	1.9	1.7		2.4	2.2	1.9	1.7	1.5	2.5	2.1	1.8	1.7	1.5	24.0
26.0	2.3	2.0	1.8	1.6		2.4	2.1	1.8	1.6		2.4	2.1	1.8	1.6		2.4	2.2	1.8	1.7		2.4	2.1	1.8	1.6		26.0
28.0	2.2	1.9	1.7	1.6		2.3	2.0	1.8	1.6		2.3	2.0	1.8	1.6		2.4	2.1	1.8	1.6		2.2	2.0	1.7	1.6		28.0
30.0	2.1	1.8	1.6	1.5		2.1	1.9	1.7	1.5		2.0	1.9	1.7	1.5		2.0	2.0	1.7	1.6		2.1	1.9	1.7	1.5		30.0
32.0	2.0	1.8	1.6			1.6	1.8	1.6			1.5	1.8	1.7	1.5		1.5	1.9	1.7	1.5		2.1	1.8	1.6	1.5		32.0
34.0	1.9	1.7	1.6			1.2	1.4	1.6			1.1	1.4	1.6			1.1	1.4	1.6	1.5		2.0	1.8	1.6	1.5		34.0
36.0		1.7	1.5				1.0	1.3				0.9	1.3					1.3			1.9	1.7	1.5			36.0
38.0		1.6											0.9								1.8	1.7	1.5			38.0
40.0		1.6																			1.6	1.6	1.5			40.0
42.0		1.5																			1.3	1.5	1.4			42.0
44.0																						1.2				44.0
46.0																						0.9				46.0
48.0																										48.0
50.0																										50.0
52.0																										52.0
54.0																										54.0
56.0																										56.0
58.0																										58.0
60.0																										60.0
64.0																										64.0
% 1	0	0	0	0		92	92	92	92	92	92	92	92	92		92	92	92	92	92	0	0	0	0	0	1
% 2	0	0	0	0		92	92	92	92	92	92	92	92	92		92	92	92	92	92	0	0	0	0	0	2
% 3	0	0	0	0		46	46	46	46	46	92	92	92	92		92	92	92	92	92	46	46	46	46	46	3
% 4	46	46	46	46		0	0	0	0	0	0	0	0	0		46	46	46	46	46	92	92	92	92	92	4
% 5	92	92	92	92		0	0	0	0	0	0	0	0	0		0	0	0	0	0	92	92	92	92	92	5
% 6	92	92	92	92		0	0	0	0	0	0	0	0	0		0	0	0	0	0	92	92	92	92	92	6
ID	22	22	22	22		116	116	116	116	116	110	110	110	110		93	93	93	93	93	24	24	24	24	24	ID
[DEG]	48~84.7	33~84.7	49~84.7	63~84.7		46~84.7	45~84.7	49~84.7	62~84.7	77~84.7	51~84.7	50~84.7	50~84.7	62~84.7		54~84.7	57~84.7	57~84.7	62~84.7	77~84.7	44~84.7	38~84.7	48~84.7	63~84.7	78~84.7	[DEG]
	1	1	1	1		1	1	1	1	1	1	1	1	1		1	1	1	1	1	1	1	1	1	1	
	8.7t	8.7t	8.7t	8.7t		8.7t	8.7t	8.7t	8.7t	8.7t	8.7t	8.7t	8.7t	8.7t		8.7t	8.7t	8.7t	8.7t	8.7t	8.7t	8.7t	8.7t	8.7t	8.7t	

m	41.2	41.2	41.2	41.2	41.2	44.9	44.9	44.9	44.9	44.9	44.9	44.9	44.9	44.9	44.9	48.6	48.6	48.6	48.6	48.6	48.6	48.6	48.6	48.6	48.6	m
°	5	15	30	45	60	5	15	30	45	60	5	15	30	45	60	5	15	30	45	60	5	15	30	45	60	°
m 3.0																										3.0
3.5																										3.5
4.0																										4.0
4.5																										4.5
5.0																										5.0
6.0																										6.0
7.0																										7.0
8.0																										8.0
9.0																										9.0
10.0	2.7										2.4															10.0
11.0	2.7					1.9					2.4					2.0					2.2					11.0
12.0	2.7					1.9					2.4					2.0					2.2					12.0
14.0	2.7	2.7				1.9	1.9				2.4	2.4				2.0	2.0				2.2	2.2				14.0
16.0	2.7	2.7				1.9	1.9				2.4	2.4				2.0	2.0				2.2	2.2				16.0
18.0	2.7	2.6	2.1			1.9	1.9	1.9			2.4	2.4	2.1			2.0	2.0				2.2	2.2				18.0
20.0	2.7	2.5	2.1	1.8		1.9	1.9	1.9			2.4	2.4	2.0			2.0	2.0	2.0			2.2	2.2	2.0			20.0
22.0	2.7	2.4	2.0	1.8	1.5	1.9	1.9	1.9	1.7		2.4	2.4	2.0	1.7		2.0	2.0	1.9	1.7		2.2	2.2	1.9	1.7		22.0
24.0	2.6	2.3	1.9	1.7	1.5	1.9	1.9	1.8	1.7	1.5	2.4	2.2	1.9	1.7	1.5	2.0	2.0	1.9	1.7	1.5	2.2	2.2	1.9	1.7	1.5	24.0
26.0	2.5	2.2	1.8	1.7		1.9	1.9	1.8	1.6	1.5	2.4	2.2	1.8	1.7	1.5	2.0	2.0	1.8	1.6	1.5	2.2	2.1	1.8	1.6	1.5	26.0
28.0	2.4	2.1	1.8	1.6		1.9	1.9	1.7	1.6		2.4	2.1	1.8	1.6		2.0	2.0	1.7	1.6		2.2	2.1	1.8	1.6		28.0
30.0	2.0	2.0	1.7	1.6		1.9	1.9	1.7	1.5		2.1	2.0	1.7	1.6		2.0	2.0	1.7	1.6		2.1	2.0	1.7	1.6		30.0
32.0	1.5	1.9	1.7	1.6		1.9	1.9	1.6	1.5		1.6	1.9	1.7	1.5		2.0	1.9	1.6	1.5		1.6	1.9	1.7	1.5		32.0
34.0		1.4	1.6	1.5		1.9	1.8	1.6	1.5			1.5	1.6	1.5		1.6	1.8	1.6	1.5			1.5	1.6	1.5		34.0
36.0			1.4	1.5		1.8	1.7	1.5	1.5				1.5	1.5		1.2	1.5	1.6	1.5				1.5	1.5		36.0
38.0						1.5	1.7	1.5									1.2	1.5	1.4					1.4		38.0
40.0						1.2	1.4	1.5										1.1								40.0
42.0						0.9	1.1	1.3																		42.0
44.0								1.0																		44.0
46.0																										46.0
48.0																										48.0
50.0																										50.0
52.0																										52.0
54.0																										54.0
56.0																										56.0
58.0																										58.0
60.0																										60.0
64.0																										64.0
% 1	92	92	92	92	92	0	0	0	0	0	92	92	92	92	92	46	46	46	46	46	92	92	92	92	92	1
% 2	92	92	92	92	92	46	46	46	46	46	92	92	92	92	92	92	92	92	92	92	92	92	92	92	92	2
% 3	92	92	92	92	92	92	92	92	92	92	92	92	92	92	92	92	92	92	92	92	92	92	92	92	92	3
% 4	92	92	92	92	92	92	92	92	92	92	92	92	92	92	92	92	92	92	92	92	92	92	92	92	92	4
% 5	0	0	0	0	0	92	92	92	92	92	46	46	46	46	46	92	92	92	92	92	92	92	92	92	92	5
% 6	0	0	0	0	0	92	92	92	92	92	0	0	0	0	0	46	46	46	46	46	0	0	0	0	0	6
ID	83	83	83	83	83	26	26	26	26	26	65	65	65	65	65	38	38	38	38	38	49	49	49	49	49	ID
[DEG]	60~84.7	60~84.7	61~84.7	62~84.7	79~84.7	51~84.7	54~84.7	53~84.7	65~84.7	78~84.7	62~84.7	63~84.7	63~84.7	65~84.7	78~84.7	60~84.7	61~84.7	61~84.7	65~84.7	79~84.7	64~84.7	65~84.7	66~84.7	65~84.7	79~84.7	[DEG]
	1	1	1	1	1	1	1	1	1	1	1	1	1	1	1	1	1	1	1	1	1	1	1	1	1	
	8.7t	8.7t	8.7t	8.7t	8.7t	8.7t	8.7t	8.7t	8.7t	8.7t	8.7t	8.7t	8.7t	8.7t	8.7t	8.7t	8.7t	8.7t	8.7t	8.7t	8.7t	8.7t	8.7t	8.7t	8.7t	

FLJ	1.6m + 17.4m	22.7 t	8.0m x 5.0m	360 °	JPN

m	52.3	52.3	52.3	52.3	52.3	52.3	52.3	52.3	52.3	52.3	56.0	56.0	56.0	56.0	56.0	60.0	60.0	60.0	60.0	60.0	m
°	5	15	30	45	60	5	15	30	45	60	5	15	30	45	60	5	15	30	45	60	°
3.0																					3.0
3.5																					3.5
4.0																					4.0
4.5																					4.5
5.0																					5.0
6.0																					6.0
7.0																					7.0
8.0																					8.0
9.0																					9.0
10.0																					10.0
11.0																					11.0
12.0						2.0															12.0
14.0	1.8					2.0					1.8										14.0
16.0	1.8	1.8				2.0	2.0				1.8	1.8				1.0					16.0
18.0	1.8	1.8				2.0	2.0				1.8	1.8				1.0	1.0				18.0
20.0	1.8	1.8	1.8			2.0	2.0	2.0			1.8	1.8				1.0	1.0				20.0
22.0	1.8	1.8	1.8			2.0	2.0	1.9			1.8	1.8	1.8			1.0	1.0	1.0			22.0
24.0	1.8	1.8	1.8	1.6		2.0	2.0	1.9	1.7		1.8	1.8	1.8	1.6		1.0	1.0	1.0			24.0
26.0	1.8	1.8	1.8	1.6	1.5	2.0	2.0	1.8	1.6	1.5	1.8	1.8	1.8	1.6	1.5	1.0	1.0	1.0	1.0		26.0
28.0	1.8	1.8	1.7	1.6	1.4	2.0	2.0	1.7	1.6	1.4	1.8	1.8	1.7	1.6	1.4	1.0	1.0	1.0	1.0	1.0	28.0
30.0	1.8	1.8	1.7	1.5		2.0	2.0	1.7	1.5		1.8	1.8	1.7	1.5		1.0	1.0	1.0	1.0	1.0	30.0
32.0	1.8	1.8	1.6	1.5		1.7	1.9	1.6	1.5		1.8	1.8	1.6	1.5			1.0	1.0	1.0		32.0
34.0	1.7	1.8	1.6	1.5			1.6	1.6	1.5			1.7	1.6	1.5				1.0	1.0		34.0
36.0	1.3	1.6	1.5	1.4				1.6	1.5				1.5	1.4					1.0		36.0
38.0			1.5	1.4					1.4					1.4							38.0
40.0			1.2	1.4																	40.0
42.0																					42.0
44.0																					44.0
46.0																					46.0
48.0																					48.0
50.0																					50.0
52.0																					52.0
54.0																					54.0
56.0																					56.0
58.0																					58.0
60.0																					60.0
64.0																					64.0
1	46	46	46	46	46	92	92	92	92	92	92	92	92	92	92	100	100	100	100	100	1
2	92	92	92	92	92	92	92	92	92	92	92	92	92	92	92	100	100	100	100	100	2
3	92	92	92	92	92	92	92	92	92	92	92	92	92	92	92	100	100	100	100	100	3
4	92	92	92	92	92	92	92	92	92	92	92	92	92	92	92	100	100	100	100	100	4
5	92	92	92	92	92	92	92	92	92	92	92	92	92	92	92	100	100	100	100	100	5
6	92	92	92	92	92	46	46	46	46	46	92	92	92	92	92	100	100	100	100	100	6
ID	28	28	28	28	28	39	39	39	39	39	29	29	29	29	29	19	19	19	19	19	ID
[DEG]	63~84.7	65~84.7	64~84.7	65~84.7	78~84.7	66~84.7	67~84.7	68~84.7	67~84.7	78~84.7	68~84.7	69~84.7	69~84.7	69~84.7	79~84.7	71~84.7	71~84.7	72~84.7	72~84.7	78~84.7	[DEG]
	1	1	1	1	1	1	1	1	1	1	1	1	1	1	1	1	1	1	1	1	
	8.7t	8.7t	8.7t	8.7t	8.7t	8.7t	8.7t	8.7t	8.7t	8.7t	8.7t	8.7t	8.7t	8.7t	8.7t	8.7t	8.7t	8.7t	8.7t	8.7t	

FLJ	1.6m + 7.4m	18.7 t	8.0m x 7.5m	360 °	JPN

m	11.4	11.4	11.4	11.4	11.4	15.1	15.1	15.1	15.1	15.1	15.1	15.1	15.1	15.1	15.1	15.1	15.1	15.1	15.1	15.1	18.8	18.8	18.8	18.8	18.8	m
°	5	15	30	45	60	5	15	30	45	60	5	15	30	45	60	5	15	30	45	60	5	15	30	45	60	°
3.0	7.3					7.3					7.3					7.3					7.3					3.0
3.5	7.3					7.3					7.3					7.3					7.3					3.5
4.0	7.3	7.3				7.3	7.3				7.3	7.3				7.3	7.3				7.3					4.0
4.5	7.3	7.3				7.3	7.3				7.3	7.3				7.3	7.3				7.3					4.5
5.0	7.3	7.3	7.3			7.3	7.3				7.3	7.3				7.3	7.3				7.3	7.3				5.0
6.0	7.3	7.3	7.3			7.3	7.3	7.3			7.3	7.3	7.3			7.3	7.3	7.3			7.3	7.3	7.3			6.0
7.0	7.3	7.3	7.3	6.5	5.0	7.3	7.3	7.3	6.7		7.3	7.3	7.3	6.7		7.3	7.3	7.3	6.7		7.3	7.3	7.3			7.0
8.0	7.3	7.3	7.3	6.3	4.9	7.3	7.3	7.3	6.5	5.0	7.3	7.3	7.3	6.5	5.0	7.3	7.3	7.3	6.5	5.0	7.3	7.3	7.3	6.6	5.0	8.0
9.0	7.3	7.3	7.2	6.0		7.3	7.3	7.3	6.3	4.9	7.3	7.3	7.3	6.3	4.9	7.3	7.3	7.3	6.3	4.9	7.3	7.3	7.3	6.4	4.9	9.0
10.0	7.3	7.3	6.9	5.9		7.3	7.3	7.3	6.1		7.3	7.3	7.3	6.1		7.3	7.3	7.3	6.1		7.3	7.3	7.3	6.3	4.9	10.0
11.0	7.3	7.3	6.6	5.7		7.3	7.3	7.0	5.9		7.3	7.3	7.0	5.9		7.3	7.3	7.0	5.9		7.3	7.3	7.3	6.1		11.0
12.0	7.3	7.0	6.3			7.3	7.3	6.8	5.8		7.3	7.3	6.8	5.8		7.3	7.3	6.8	5.8		7.3	7.3	7.2	6.0		12.0
14.0	6.4	6.2	5.9			7.3	7.1	6.3			7.3	7.1	6.3			7.3	7.1	6.3			7.3	7.3	6.7	5.7		14.0
16.0	5.7	5.7				6.8	6.4	5.9			6.8	6.4	5.9			6.8	6.4	5.9			7.3	7.1	6.3			16.0
18.0						6.0	5.9				6.0	5.9				6.0	5.9				7.0	6.6	6.0			18.0
20.0						5.5					5.5					5.5					6.3	6.1				20.0
22.0																					5.8	5.7				22.0
24.0																					5.3					24.0
26.0																										26.0
28.0																										28.0
30.0																										30.0
32.0																										32.0
34.0																										34.0
36.0																										36.0
38.0																										38.0
40.0																										40.0
42.0																										42.0
44.0																										44.0
46.0																										46.0
48.0																										48.0
50.0																										50.0
52.0																										52.0
54.0																										54.0
56.0																										56.0
58.0																										58.0
60.0																										60.0
64.0																										64.0
1	0	0	0	0	0	0	0	0	0	0	0	0	0	0	0	0	0	0	0	0	0	0	0	0	0	1
2	0	0	0	0	0	0	0	0	0	0	0	0	0	0	0	46	46	46	46	46	0	0	0	0	0	2
3	0	0	0	0	0	0	0	0	0	0	46	46	46	46	46	0	0	0	0	0	0	0	0	0	0	3
4	0	0	0	0	0	46	46	46	46	46	0	0	0	0	0	0	0	0	0	0	0	0	0	0	0	4
5	0	0	0	0	0	0	0	0	0	0	0	0	0	0	0	0	0	0	0	0	46	46	46	46	46	5
6	0	0	0	0	0	0	0	0	0	0	0	0	0	0	0	0	0	0	0	0	46	46	46	46	46	6
ID	1	1	1	1	1	76	76	76	76	76	105	105	105	105	105	131	131	131	131	131	30	30	30	30	30	ID
[DEG]	0~84.7	0~84.7	0~84.7	0~84.7	0~84.7	24~84.7	37~84.7	48~84.7	64~84.7	75~84.7	24~84.7	37~84.7	48~84.7	64~84.7	75~84.7	24~84.7	37~84.7	48~84.7	64~84.7	75~84.7	22~84.7	34~84.7	50~84.7	63~84.7	75~84.7	[DEG]
	1	1	1	1	1	1	1	1	1	1	1	1	1	1	1	1	1	1	1	1	1	1	1	1	1	
	8.7t	8.7t	8.7t	8.7t	8.7t	8.7t	8.7t	8.7t	8.7t	8.7t	8.7t	8.7t	8.7t	8.7t	8.7t	8.7t	8.7t	8.7t	8.7t	8.7t	8.7t	8.7t	8.7t	8.7t	8.7t	

フルオートラフィングジブ

FLJ	1.6m + 7.4m	18.7 t	8.0m x 7.5m	360 °	JPN

m	18.8	18.8	18.8	18.8	18.8	18.8	18.8	18.8	18.8	18.8	18.8	18.8	18.8	18.8	18.8	22.6	22.6	22.6	22.6	22.6	26.3	26.3	26.3	26.3	26.3	m
°	5	15	30	45	60	5	15	30	45	60	5	15	30	45	60	5	15	30	45	60	5	15	30	45	60	°
3.0	7.3					7.3					7.3															3.0
3.5	7.3					7.3					7.3															3.5
4.0	7.3					7.3	7.3				7.3	7.3				7.3										4.0
4.5	7.3					7.3	7.3				7.3	7.3				7.3										4.5
5.0	7.3	7.3				7.3	7.3				7.3	7.3				7.3	7.3				7.3					5.0
6.0	7.3	7.3	7.3			7.3	7.3	7.3			7.3	7.3	7.3			7.3	7.3				7.3	7.3				6.0
7.0	7.3	7.3	7.3	6.9		7.3	7.3	7.3	6.9		7.3	7.3	7.3	6.9		7.3	7.3	7.3			7.3	7.3				7.0
8.0	7.3	7.3	7.3	6.6	5.0	7.3	7.3	7.3	6.6	5.0	7.3	7.3	7.3	6.6	5.0	7.3	7.3	7.3	6.8		7.3	7.3	7.3			8.0
9.0	7.3	7.3	7.3	6.4	4.9	7.3	7.3	7.3	6.4	4.9	7.3	7.3	7.3	6.4	4.9	7.3	7.3	7.3	6.6	5.0	7.3	7.3	7.3	6.7	5.0	9.0
10.0	7.3	7.3	7.3	6.3	4.9	7.3	7.3	7.3	6.3	4.9	7.3	7.3	7.3	6.3	4.9	7.3	7.3	7.3	6.4	4.9	7.3	7.3	7.3	6.5	4.9	10.0
11.0	7.3	7.3	7.3	6.1		7.3	7.3	7.3	6.1		7.3	7.3	7.3	6.1		7.3	7.3	7.3	6.3	4.8	7.3	7.3	7.3	6.4	4.9	11.0
12.0	7.3	7.3	7.2	6.0		7.3	7.3	7.2	6.0		7.3	7.3	7.2	6.0		7.3	7.3	7.3	6.1		7.3	7.3	7.3	6.3	4.8	12.0
14.0	7.3	7.3	6.7	5.7		7.3	7.3	6.7	5.7		7.3	7.3	6.7	5.7		7.2	6.9	6.5	5.9		7.3	7.3	7.3	6.0		14.0
16.0	7.3	7.1	6.3			7.3	7.1	6.3			7.3	7.1	6.3			6.4	6.1	5.9	5.7		7.3	7.3	7.0	5.8		16.0
18.0	7.0	6.6	6.0			7.0	6.6	6.0			7.0	6.6	6.0			5.7	5.5	5.3			7.3	7.3	6.6	5.7		18.0
20.0	6.3	6.1				6.3	6.1				6.3	6.1				5.1	5.0	4.9			7.3	7.2	6.3			20.0
22.0	5.8	5.7				5.8	5.7				5.8	5.7				4.6	4.5	4.5			6.2	6.5	6.1			22.0
24.0	5.3					5.3					5.3					4.2	4.1				4.8	5.0	5.3			24.0
26.0																3.8	3.8				3.6	3.8				26.0
28.0																					2.6	2.8				28.0
30.0																					1.8					30.0
32.0																										32.0
34.0																										34.0
36.0																										36.0
38.0																										38.0
40.0																										40.0
42.0																										42.0
44.0																										44.0
46.0																										46.0
48.0																										48.0
50.0																										50.0
52.0																										52.0
54.0																										54.0
56.0																										56.0
58.0																										58.0
60.0																										60.0
64.0																										64.0
1	0	0	0	0	0	0	0	0	0	0	0	0	0	0	0	0	0	0	0	0	92	92	92	92	92	1
2	0	0	0	0	0	0	0	0	0	0	46	46	46	46	46	0	0	0	0	0	92	92	92	92	92	2
3	0	0	0	0	0	46	46	46	46	46	46	46	46	46	46	0	0	0	0	0	0	0	0	0	0	3
4	46	46	46	46	46	46	46	46	46	46	0	0	0	0	0	0	0	0	0	0	0	0	0	0	0	4
5	46	46	46	46	46	0	0	0	0	0	0	0	0	0	0	46	46	46	46	46	0	0	0	0	0	5
6	0	0	0	0	0	0	0	0	0	0	0	0	0	0	0	92	92	92	92	92	0	0	0	0	0	6
ID	58	58	58	58	58	88	88	88	88	88	113	113	113	113	113	20	20	20	20	20	134	134	134	134	134	ID
[DEG]	21~84.7	33~84.7	50~84.7	63~84.7	75~84.7	21~84.7	33~84.7	50~84.7	63~84.7	75~84.7	21~84.7	33~84.7	50~84.7	63~84.7	75~84.7	29~84.7	30~84.7	46~84.7	63~84.7	76~84.7	26~84.7	35~84.7	48~84.7	63~84.7	76~84.7	[DEG]
	1	1	1	1	1	1	1	1	1	1	1	1	1	1	1	1	1	1	1	1	1	1	1	1	1	
	8.7t	8.7t	8.7t	8.7t	8.7t	8.7t	8.7t	8.7t	8.7t	8.7t	8.7t	8.7t	8.7t	8.7t	8.7t	8.7t	8.7t	8.7t	8.7t	8.7t	8.7t	8.7t	8.7t	8.7t	8.7t	

m	30.0	30.0	30.0	30.0	30.0	30.0	30.0	30.0	30.0	30.0	33.7	33.7	33.7	33.7	33.7	37.4	37.4	37.4	37.4	37.4	37.4	37.4	37.4	37.4	37.4	m
°	5	15	30	45	60	5	15	30	45	60	5	15	30	45	60	5	15	30	45	60	5	15	30	45	60	°
3.0																										3.0
3.5																										3.5
4.0																										4.0
4.5																										4.5
5.0	7.3					7.3																				5.0
6.0	7.3	7.3				7.3	7.3				7.3															6.0
7.0	7.3	7.3				7.3	7.3				7.3	7.3				7.1					7.3					7.0
8.0	7.3	7.3	7.3			7.3	7.3	7.3			7.3	7.3				7.1	7.1				7.3	7.3				8.0
9.0	7.3	7.3	7.3			7.3	7.3	7.3	6.8		7.3	7.3	7.3			7.1	7.1				7.3	7.3				9.0
10.0	7.3	7.3	7.3	6.6	5.0	7.3	7.3	7.3	6.6	5.0	7.3	7.3	7.3	6.7		7.1	7.1	7.1			7.3	7.3	7.3			10.0
11.0	7.3	7.3	7.3	6.5	4.9	7.3	7.3	7.3	6.5	4.9	7.3	7.3	7.3	6.6	4.9	7.1	7.1	7.1	6.7	5.0	7.3	7.3	7.2	6.7		11.0
12.0	7.3	7.3	7.1	6.4	4.9	7.3	7.3	7.3	6.4	4.9	7.3	7.3	7.3	6.5	4.9	7.1	7.1	7.1	6.6	4.9	7.3	7.3	6.9	6.4	4.9	12.0
14.0	6.8	6.6	6.3	6.1		7.3	7.3	7.3	6.1		7.3	7.3	7.3	6.2	4.8	7.1	7.1	7.1	6.3	4.8	6.9	6.6	6.2	5.9	4.8	14.0
16.0	6.0	5.8	5.6	5.5		7.3	7.3	7.2	5.9		7.3	7.3	7.3	6.0		7.1	7.1	7.1	6.1		6.1	5.9	5.7	5.5		16.0
18.0	5.3	5.2	5.1	5.0		7.3	7.3	6.9	5.8		7.3	7.3	7.1	5.9		7.1	7.1	7.1	6.0		5.5	5.4	5.2	5.0		18.0
20.0	4.8	4.7	4.6	4.5		7.3	7.3	6.6	5.6		7.3	7.3	6.8	5.7		7.1	7.1	7.1	5.8		5.0	4.9	4.7	4.6		20.0
22.0	4.3	4.3	4.2			6.2	6.5	6.3			6.1	6.5	6.5	5.6		6.3	6.7	6.8	5.7		4.6	4.5	4.3	4.3		22.0
24.0	3.9	3.9	3.8			4.8	5.0	5.4			4.7	5.1	5.4			4.9	5.2	5.6	5.6		4.2	4.1	4.0	4.0		24.0
26.0	3.5	3.5	3.5			3.6	3.8	4.1			3.6	3.9	4.2			3.7	4.0	4.4			3.9	3.8	3.7			26.0
28.0	3.2	3.1				2.6	2.8				2.6	2.9	3.1			2.8	3.0	3.3			3.6	3.5	3.5			28.0
30.0	2.8	2.8				1.8	2.0				1.8	2.0	2.2			2.0	2.2	2.4			3.4	3.3	3.2			30.0
32.0	2.5	2.5				1.1	1.2				1.1	1.3				1.2	1.4	1.6			3.1	3.1	3.0			32.0
34.0	2.2																				2.8	2.8				34.0
36.0																					2.6	2.6				36.0
38.0																					2.2	2.2				38.0
40.0																					1.7					40.0
42.0																										42.0
44.0																										44.0
46.0																										46.0
48.0																										48.0
50.0																										50.0
52.0																										52.0
54.0																										54.0
56.0																										56.0
58.0																										58.0
60.0																										60.0
64.0																										64.0
1	0	0	0	0	0	92	92	92	92	92	92	92	92	92	92	92	92	92	92	92	0	0	0	0	0	1
2	0	0	0	0	0	92	92	92	92	92	92	92	92	92	92	92	92	92	92	92	0	0	0	0	0	2
3	0	0	0	0	0	46	46	46	46	46	92	92	92	92	92	92	92	92	92	92	46	46	46	46	46	3
4	46	46	46	46	46	0	0	0	0	0	0	0	0	0	0	46	46	46	46	46	92	92	92	92	92	4
5	92	92	92	92	92	0	0	0	0	0	0	0	0	0	0	0	0	0	0	0	92	92	92	92	92	5
6	92	92	92	92	92	0	0	0	0	0	0	0	0	0	0	0	0	0	0	0	92	92	92	92	92	6
ID	22	22	22	22	22	116	116	116	116	116	110	110	110	110	110	93	93	93	93	93	24	24	24	24	24	ID
[DEG]	24~84.7	32~84.7	50~84.7	63~84.7	78~84.7	31~84.7	32~84.7	49~84.7	63~84.7	78~84.7	39~84.7	40~84.7	46~84.7	63~84.7	76~84.7	45~84.7	46~84.7	48~84.7	63~84.7	78~84.7	28~84.7	34~84.7	49~84.7	63~84.7	78~84.7	[DEG]
	1	1	1	1	1	1	1	1	1	1	1	1	1	1	1	1	1	1	1	1	1	1	1	1	1	
	8.7t	8.7t	8.7t	8.7t	8.7t	8.7t	8.7t	8.7t	8.7t	8.7t	8.7t	8.7t	8.7t	8.7t	8.7t	8.7t	8.7t	8.7t	8.7t	8.7t	8.7t	8.7t	8.7t	8.7t	8.7t	

FLJ	1.6m + 7.4m	18.7 t	8.0m x 7.5m	360 °	JPN

m	41.2	41.2	41.2	41.2	41.2	44.9	44.9	44.9	44.9	44.9	44.9	44.9	44.9	44.9	44.9	48.6	48.6	48.6	48.6	48.6	48.6	48.6	48.6	48.6	48.6	m
°	5	15	30	45	60	5	15	30	45	60	5	15	30	45	60	5	15	30	45	60	5	15	30	45	60	°
3.0																										3.0
3.5																										3.5
4.0																										4.0
4.5																										4.5
5.0																										5.0
6.0																										6.0
7.0	7.3																									7.0
8.0	7.3										6.5															8.0
9.0	7.3	7.3				4.6					6.5					4.8					5.4					9.0
10.0	7.3	7.3	7.3			4.6	4.6				6.5	6.5				4.8					5.4					10.0
11.0	7.3	7.3	7.3			4.6	4.6				6.5	6.5	6.5			4.8	4.8				5.4	5.4				11.0
12.0	7.3	7.3	7.3	6.6	4.9	4.6	4.6	4.6			6.5	6.5	6.5			4.8	4.8	4.8			5.4	5.4	5.4			12.0
14.0	7.3	7.3	7.3	6.4	4.9	4.6	4.6	4.6	4.6	4.6	6.5	6.5	6.5	6.5	4.9	4.8	4.8	4.8	4.8	4.8	5.4	5.4	5.4	5.4	4.9	14.0
16.0	7.3	7.3	7.3	6.2		4.6	4.6	4.6	4.6	4.6	6.5	6.5	6.5	6.3	4.8	4.8	4.8	4.8	4.8	4.8	5.4	5.4	5.4	5.4	4.8	16.0
18.0	7.3	7.3	7.2	6.1		4.6	4.6	4.6	4.6		6.5	6.5	6.5	6.1		4.8	4.8	4.8	4.8		5.4	5.4	5.4	5.4		18.0
20.0	7.3	7.3	7.1	5.9		4.6	4.6	4.6	4.6		6.5	6.5	6.5	6.0		4.8	4.8	4.8	4.8		5.4	5.4	5.4	5.4		20.0
22.0	6.4	6.8	6.8	5.8		4.6	4.5	4.3	4.2		6.5	6.5	6.5	5.9		4.8	4.8	4.8	4.7		5.4	5.4	5.4	5.4		22.0
24.0	5.0	5.3	5.8	5.7		4.3	4.2	4.0	4.0		5.2	5.6	6.0	5.8		4.8	4.8	4.6	4.5		5.4	5.4	5.4	5.4		24.0
26.0	3.9	4.2	4.5	4.7		4.0	3.9	3.8	3.7		4.1	4.4	4.7	5.0		4.7	4.5	4.3	4.2		4.3	4.6	4.9	5.2		26.0
28.0	2.9	3.1	3.5			3.7	3.6	3.5	3.5		3.1	3.4	3.7	3.9		4.0	4.2	4.1	4.0		3.3	3.5	3.9	4.1		28.0
30.0	2.1	2.3	2.6			3.5	3.4	3.3			2.3	2.5	2.8			3.1	3.4	3.6	3.8		2.5	2.7	3.0	3.2		30.0
32.0	1.4	1.6	1.8			3.3	3.2	3.1			1.6	1.8	2.0			2.4	2.6	2.8			1.7	2.0	2.2			32.0
34.0		0.9	1.1			2.7	2.8	3.0			1.0	1.1	1.3			1.8	2.0	2.2			1.1	1.3	1.5			34.0
36.0						2.1	2.2	2.4								1.3	1.4	1.6					0.9			36.0
38.0						1.6	1.7										0.9	1.1								38.0
40.0						1.2	1.3																			40.0
42.0							0.9																			42.0
44.0																										44.0
46.0																										46.0
48.0																										48.0
50.0																										50.0
52.0																										52.0
54.0																										54.0
56.0																										56.0
58.0																										58.0
60.0																										60.0
64.0																										64.0
% 1	92	92	92	92	92	0	0	0	0	0	92	92	92	92	92	46	46	46	46	46	92	92	92	92	92	1
% 2	92	92	92	92	92	46	46	46	46	46	92	92	92	92	92	92	92	92	92	92	92	92	92	92	92	2
% 3	92	92	92	92	92	92	92	92	92	92	92	92	92	92	92	92	92	92	92	92	92	92	92	92	92	3
% 4	92	92	92	92	92	92	92	92	92	92	92	92	92	92	92	92	92	92	92	92	92	92	92	92	92	4
% 5	0	0	0	0	0	92	92	92	92	92	46	46	46	46	46	92	92	92	92	92	92	92	92	92	92	5
% 6	0	0	0	0	0	92	92	92	92	92	0	0	0	0	0	46	46	46	46	46	0	0	0	0	0	6
ID	83	83	83	83	83	26	26	26	26	26	65	65	65	65	65	38	38	38	38	38	49	49	49	49	49	ID
[DEG]	50~84.7	48~84.7	49~84.7	63~84.7	79~84.7	42~84.7	39~84.7	51~84.7	63~84.7	78~84.7	51~84.7	52~84.7	53~84.7	63~84.7	78~84.7	52~84.7	50~84.7	51~84.7	63~84.7	79~84.7	54~84.7	56~84.7	54~84.7	63~84.7	79~84.7	[DEG]
	1	1	1	1	1	1	1	1	1	1	1	1	1	1	1	1	1	1	1	1	1	1	1	1	1	
	8.7t	8.7t	8.7t	8.7t	8.7t	8.7t	8.7t	8.7t	8.7t	8.7t	8.7t	8.7t	8.7t	8.7t	8.7t	8.7t	8.7t	8.7t	8.7t	8.7t	8.7t	8.7t	8.7t	8.7t	8.7t	

m	52.3	52.3	52.3	52.3	52.3	52.3	52.3	52.3	52.3	52.3	56.0	56.0	56.0	56.0	56.0	60.0	60.0	60.0	60.0	60.0						m
°	5	15	30	45	60	5	15	30	45	60	5	15	30	45	60	5	15	30	45	60						°
3.0																										3.0
3.5																										3.5
4.0																										4.0
4.5																										4.5
5.0																										5.0
6.0																										6.0
7.0																										7.0
8.0																										8.0
9.0																										9.0
10.0	3.9					4.4																				10.0
11.0	3.9					4.4					3.7															11.0
12.0	3.9	3.9				4.4	4.4				3.7															12.0
14.0	3.9	3.9	3.9			4.4	4.4	4.4			3.7	3.7	3.7			3.2	3.2									14.0
16.0	3.9	3.9	3.9	3.9	3.9	4.4	4.4	4.4	4.4	4.4	3.7	3.7	3.7	3.7	3.7	3.2	3.2	3.2	3.2							16.0
18.0	3.9	3.9	3.9	3.9	3.9	4.4	4.4	4.4	4.4	4.4	3.7	3.7	3.7	3.7	3.7	3.2	3.2	3.2	3.2	3.2						18.0
20.0	3.9	3.9	3.9	3.9		4.4	4.4	4.4	4.4		3.7	3.7	3.7	3.7		3.2	3.2	3.2	3.2	3.2						20.0
22.0	3.9	3.9	3.9	3.9		4.4	4.4	4.4	4.4		3.7	3.7	3.7	3.7		3.2	3.2	3.2	3.2							22.0
24.0	3.9	3.9	3.9	3.9		4.4	4.4	4.4	4.4		3.7	3.7	3.7	3.7		3.2	3.2	3.2	3.2							24.0
26.0	3.9	3.9	3.7	3.6		4.4	4.4	4.2	4.1		3.7	3.7	3.7	3.6		3.2	3.2	3.2	3.2							26.0
28.0	3.7	3.6	3.5	3.4		3.5	3.8	4.0	3.9		3.7	3.6	3.5	3.4		3.2	3.2	3.2	3.2							28.0
30.0	3.3	3.4	3.3	3.2		2.7	2.9	3.2	3.4		2.9	3.1	3.3	3.2		2.8	3.1	3.1	3.0							30.0
32.0	2.6	2.8	3.1			2.0	2.2	2.4			2.2	2.4	2.7	2.8		2.1	2.3	2.6	2.8							32.0
34.0	2.0	2.2	2.4			1.4	1.5	1.8			1.6	1.8	2.0			1.5	1.7	1.9	2.1							34.0
36.0	1.4	1.6	1.8				1.0	1.2			1.0	1.2	1.4			0.9	1.1	1.3								36.0
38.0	1.0	1.1	1.3										0.9													38.0
40.0																										40.0
42.0																										42.0
44.0																										44.0
46.0																										46.0
48.0																										48.0
50.0																										50.0
52.0																										52.0
54.0																										54.0
56.0																										56.0
58.0																										58.0
60.0																										60.0
64.0																										64.0
% 1	46	46	46	46	46	92	92	92	92	92	92	92	92	92	92	100	100	100	100	100						1
% 2	92	92	92	92	92	92	92	92	92	92	92	92	92	92	92	100	100	100	100	100						2
% 3	92	92	92	92	92	92	92	92	92	92	92	92	92	92	92	100	100	100	100	100						3
% 4	92	92	92	92	92	92	92	92	92	92	92	92	92	92	92	100	100	100	100	100						4
% 5	92	92	92	92	92	92	92	92	92	92	92	92	92	92	92	100	100	100	100	100						5
% 6	92	92	92	92	92	46	46	46	46	46	92	92	92	92	92	100	100	100	100	100						6
ID	28	28	28	28	28	39	39	39	39	39	29	29	29	29	29	19	19	19	19	19						ID
[DEG]	53~84.7	54~84.7	55~84.7	66~84.7	78~84.7	58~84.7	56~84.7	57~84.7	66~84.7	78~84.7	58~84.7	59~84.7	58~84.7	66~84.7	79~84.7	61~84.7	62~84.7	63~84.7	66~84.7	79~84.7						[DEG]
	1	1	1	1	1	1	1	1	1	1	1	1	1	1	1	1	1	1	1	1						
	8.7t	8.7t	8.7t	8.7t	8.7t	8.7t	8.7t	8.7t	8.7t	8.7t	8.7t	8.7t	8.7t	8.7t	8.7t	8.7t	8.7t	8.7t	8.7t	8.7t						

フルオートラフィングジブ

FLJ	1.6m + 12.4m	18.7 t	8.0m x 7.5m	360 °	JPN

m	11.4	11.4	11.4	11.4	11.4	15.1	15.1	15.1	15.1	15.1	15.1	15.1	15.1	15.1	15.1	15.1	15.1	15.1	15.1	15.1	18.8	18.8	18.8	18.8	18.8	m
°	5	15	30	45	60	5	15	30	45	60	5	15	30	45	60	5	15	30	45	60	5	15	30	45	60	°
3.0	4.3																									3.0
3.5	4.3																									3.5
4.0	4.3					4.3					4.3					4.3					4.3					4.0
4.5	4.3					4.3					4.3					4.3					4.3					4.5
5.0	4.3					4.3					4.3					4.3					4.3					5.0
6.0	4.3	4.3				4.3	4.3				4.3	4.3				4.3	4.3				4.3					6.0
7.0	4.3	4.3				4.3	4.3				4.3	4.3				4.3	4.3				4.3	4.3				7.0
8.0	4.3	4.3				4.3	4.3				4.3	4.3				4.3	4.3				4.3	4.3				8.0
9.0	4.3	4.3	4.3			4.3	4.3	4.3			4.3	4.3	4.3			4.3	4.3	4.3			4.3	4.3				9.0
10.0	4.3	4.3	4.1			4.3	4.3	4.3			4.3	4.3	4.3			4.3	4.3	4.3			4.3	4.3	4.3			10.0
11.0	4.3	4.3	3.9	3.2		4.3	4.3	4.1	3.3		4.3	4.3	4.1	3.3		4.3	4.3	4.1	3.3		4.3	4.3	4.1			11.0
12.0	4.3	4.3	3.7	3.1		4.3	4.3	3.9	3.2		4.3	4.3	3.9	3.2		4.3	4.3	3.9	3.2		4.3	4.3	3.9	3.3		12.0
14.0	4.3	4.0	3.3	2.9		4.3	4.3	3.5	3.0		4.3	4.3	3.5	3.0		4.3	4.3	3.5	3.0		4.3	4.3	3.7	3.1		14.0
16.0	3.8	3.5	3.0	2.7		4.3	3.9	3.3	2.8		4.3	3.9	3.3	2.8		4.3	3.9	3.3	2.8		4.3	4.1	3.4	2.9		16.0
18.0	3.4	3.2	2.8			3.9	3.6	3.0	2.7		3.9	3.6	3.0	2.7		3.9	3.6	3.0	2.7		4.3	3.8	3.2	2.8		18.0
20.0	3.0	2.9				3.5	3.3	2.9			3.5	3.3	2.9			3.5	3.3	2.9			4.0	3.5	3.0	2.7		20.0
22.0	2.7					3.2	3.0				3.2	3.0				3.2	3.0				3.6	3.3	2.9			22.0
24.0						2.9	2.8				2.9	2.8				2.9	2.8				3.3	3.1	2.8			24.0
26.0																					3.0	2.9				26.0
28.0																					2.8					28.0
30.0																										30.0
32.0																										32.0
34.0																										34.0
36.0																										36.0
38.0																										38.0
40.0																										40.0
42.0																										42.0
44.0																										44.0
46.0																										46.0
48.0																										48.0
50.0																										50.0
52.0																										52.0
54.0																										54.0
56.0																										56.0
58.0																										58.0
60.0																										60.0
64.0																										64.0
1	0	0	0	0		0	0	0	0		0	0	0	0		0	0	0	0		0	0	0	0		1
2	0	0	0	0		0	0	0	0		0	0	0	0		46	46	46	46		0	0	0	0		2
3	0	0	0	0		0	0	0	0		46	46	46	46		0	0	0	0		0	0	0	0		3
4	0	0	0	0		46	46	46	46		0	0	0	0		0	0	0	0		0	0	0	0		4
5	0	0	0	0		0	0	0	0		0	0	0	0		0	0	0	0		46	46	46	46		5
6	0	0	0	0		0	0	0	0		0	0	0	0		0	0	0	0		46	46	46	46		6
ID	1	1	1	1		76	76	76	76		105	105	105	105		131	131	131	131		30	30	30	30		ID
[DEG]	0~84.7	0~84.7	0~84.7	0~84.7		29~84.7	32~84.7	51~84.7	60~84.7		29~84.7	31~84.7	51~84.7	60~84.7		29~84.7	31~84.7	51~84.7	60~84.7		26~84.7	37~84.7	46~84.7	60~84.7		[DEG]
	1	1	1	1		1	1	1	1		1	1	1	1		1	1	1	1		1	1	1	1		
	8.7t	8.7t	8.7t	8.7t		8.7t	8.7t	8.7t	8.7t		8.7t	8.7t	8.7t	8.7t		8.7t	8.7t	8.7t	8.7t		8.7t	8.7t	8.7t	8.7t		

m	18.8	18.8	18.8	18.8	18.8	18.8	18.8	18.8	18.8	18.8	18.8	18.8	18.8	18.8	18.8	22.6	22.6	22.6	22.6	22.6	26.3	26.3	26.3	26.3	26.3	m
°	5	15	30	45	60	5	15	30	45	60	5	15	30	45	60	5	15	30	45	60	5	15	30	45	60	°
3.0																										3.0
3.5																										3.5
4.0	4.3					4.3					4.3															4.0
4.5	4.3					4.3					4.3															4.5
5.0	4.3					4.3					4.3					4.3										5.0
6.0	4.3					4.3					4.3					4.3					4.3					6.0
7.0	4.3	4.3				4.3	4.3				4.3	4.3				4.3	4.3				4.3					7.0
8.0	4.3	4.3				4.3	4.3				4.3	4.3				4.3	4.3				4.3	4.3				8.0
9.0	4.3	4.3				4.3	4.3				4.3	4.3				4.3	4.3				4.3	4.3				9.0
10.0	4.3	4.3	4.3			4.3	4.3	4.3			4.3	4.3	4.3			4.3	4.3				4.3	4.3				10.0
11.0	4.3	4.3	4.1			4.3	4.3	4.2			4.3	4.3	4.2			4.3	4.3	4.1			4.3	4.3	4.3			11.0
12.0	4.3	4.3	4.0	3.3		4.3	4.3	4.0	3.3		4.3	4.3	4.0	3.3		4.3	4.3	4.0			4.3	4.3	4.2			12.0
14.0	4.3	4.3	3.7	3.1		4.3	4.3	3.7	3.1		4.3	4.3	3.7	3.1		4.3	4.3	3.7	3.1		4.3	4.3	3.9	3.2	2.7	14.0
16.0	4.3	4.1	3.5	2.9		4.3	4.2	3.5	2.9		4.3	4.2	3.5	2.9		4.3	4.2	3.5	3.0		4.3	4.3	3.7	3.0	2.6	16.0
18.0	4.3	3.8	3.2	2.8		4.3	3.8	3.2	2.8		4.3	3.9	3.2	2.8		4.3	3.9	3.3	2.9		4.3	4.2	3.5	2.9		18.0
20.0	4.0	3.6	3.0	2.7		4.0	3.6	3.0	2.7		4.0	3.6	3.0	2.7		4.2	3.7	3.1	2.8		4.3	4.0	3.3	2.8		20.0
22.0	3.6	3.3	2.9			3.6	3.3	2.9			3.6	3.3	2.9			3.9	3.4	3.0			4.3	3.7	3.2	2.7		22.0
24.0	3.3	3.1	2.8			3.3	3.1	2.8			3.3	3.1	2.8			3.6	3.3	2.9			4.0	3.5	3.0			24.0
26.0	3.0	2.9				3.0	2.9				3.0	2.9				3.4	3.1	2.8			3.8	3.3	2.9			26.0
28.0	2.8					2.8					2.8					3.2	3.0				3.5	3.2	2.8			28.0
30.0																2.9	2.8				3.0	3.0				30.0
32.0																2.7					2.3	2.5				32.0
34.0																					1.6	1.8				34.0
36.0																					1.1					36.0
38.0																										38.0
40.0																										40.0
42.0																										42.0
44.0																										44.0
46.0																										46.0
48.0																										48.0
50.0																										50.0
52.0																										52.0
54.0																										54.0
56.0																										56.0
58.0																										58.0
60.0																										60.0
64.0																										64.0
1	0	0	0	0		0	0	0	0		0	0	0	0		0	0	0	0		92	92	92	92	92	1
2	0	0	0	0		0	0	0	0		46	46	46	46		0	0	0	0		92	92	92	92	92	2
3	0	0	0	0		46	46	46	46		46	46	46	46		0	0	0	0		0	0	0	0	0	3
4	46	46	46	46		46	46	46	46		0	0	0	0		0	0	0	0		0	0	0	0	0	4
5	46	46	46	46		0	0	0	0		0	0	0	0		46	46	46	46		0	0	0	0	0	5
6	0	0	0	0		0	0	0	0		0	0	0	0		92	92	92	92		0	0	0	0	0	6
ID	58	58	58	58		88	88	88	88		113	113	113	113		20	20	20	20		134	134	134	134	134	ID
[DEG]	26~84.7	37~84.7	46~84.7	60~84.7		26~84.7	37~84.7	46~84.7	60~84.7		26~84.7	37~84.7	46~84.7	60~84.7		24~84.7	34~84.7	49~84.7	65~84.7		21~84.7	31~84.7	50~84.7	64~84.7	77~84.7	[DEG]
	1	1	1	1		1	1	1	1		1	1	1	1		1	1	1	1		1	1	1	1	1	
	8.7t	8.7t	8.7t	8.7t		8.7t	8.7t	8.7t	8.7t		8.7t	8.7t	8.7t	8.7t		8.7t	8.7t	8.7t	8.7t		8.7t	8.7t	8.7t	8.7t	8.7t	

FLJ	1.6m + 12.4m	18.7 t	8.0m x 7.5m	360 °	JPN

m	30.0	30.0	30.0	30.0	30.0	30.0	30.0	30.0	30.0	30.0	33.7	33.7	33.7	33.7	33.7	37.4	37.4	37.4	37.4	37.4	37.4	37.4	37.4	37.4	37.4	m
°	5	15	30	45	60	5	15	30	45	60	5	15	30	45	60	5	15	30	45	60	5	15	30	45	60	°
m 3.0																										3.0
3.5																										3.5
4.0																										4.0
4.5																										4.5
5.0																										5.0
6.0	4.0					4.3																				6.0
7.0	4.0					4.3					4.3					4.1										7.0
8.0	4.0					4.3					4.3					4.1					4.3					8.0
9.0	4.0	4.0				4.3	4.3				4.3	4.3				4.1					4.3					9.0
10.0	4.0	4.0				4.3	4.3				4.3	4.3				4.1	4.1				4.3	4.3				10.0
11.0	4.0	4.0				4.3	4.3	4.3			4.3	4.3				4.1	4.1				4.3	4.3				11.0
12.0	4.0	4.0	4.0			4.3	4.3	4.2			4.3	4.3	4.2			4.1	4.1				4.3	4.3				12.0
14.0	4.0	4.0	3.7	3.2		4.3	4.3	3.9	3.2		4.3	4.3	3.9	3.3		4.1	4.1	3.9			4.3	4.3	3.7			14.0
16.0	4.0	4.0	3.5	3.1		4.3	4.3	3.7	3.1		4.3	4.3	3.7	3.2	2.6	4.1	4.1	3.7	3.2	2.6	4.3	4.3	3.5	3.1		16.0
18.0	4.0	4.0	3.4	3.0		4.3	4.3	3.5	3.0		4.3	4.3	3.6	3.0	2.6	4.1	4.1	3.6	3.1	2.6	4.3	4.1	3.4	3.0		18.0
20.0	4.0	3.8	3.2	2.9		4.3	4.1	3.4	2.9		4.3	4.1	3.4	2.9		4.1	4.1	3.4	3.0		4.3	3.9	3.2	2.9		20.0
22.0	4.0	3.6	3.1	2.8		4.3	3.8	3.2	2.8		4.3	3.9	3.3	2.8		4.1	3.9	3.3	2.9		4.2	3.7	3.1	2.8		22.0
24.0	3.7	3.4	3.0	2.7		4.2	3.6	3.1	2.7		4.3	3.7	3.1	2.8		4.1	3.8	3.2	2.8		3.9	3.5	3.0	2.7		24.0
26.0	3.4	3.3	2.9			3.9	3.5	3.0			4.1	3.5	3.0	2.7		4.1	3.6	3.0	2.7		3.6	3.4	2.9	2.7		26.0
28.0	3.1	3.1	2.8			3.7	3.3	2.9			3.7	3.4	2.9			3.7	3.4	2.9	2.7		3.3	3.2	2.8	2.6		28.0
30.0	2.8	2.8	2.7			2.9	3.2	2.8			2.8	3.2	2.8			2.9	3.3	2.9			3.1	3.0	2.7			30.0
32.0	2.5	2.5	2.5			2.2	2.4	2.7			2.1	2.4	2.8			2.2	2.5	2.8			2.9	2.8	2.7			32.0
34.0	2.2	2.2				1.6	1.8				1.5	1.7	2.0			1.5	1.8	2.2			2.7	2.7	2.6			34.0
36.0		2.0				1.0	1.2				0.9	1.1				1.0	1.2	1.5			2.5	2.4	2.4			36.0
38.0																					2.3	2.2				38.0
40.0																					2.1	2.0				40.0
42.0																					1.9	1.9				42.0
44.0																										44.0
46.0																										46.0
48.0																										48.0
50.0																										50.0
52.0																										52.0
54.0																										54.0
56.0																										56.0
58.0																										58.0
60.0																										60.0
64.0																										64.0
% 1	0	0	0	0		92	92	92	92		92	92	92	92	92	92	92	92	92	92	0	0	0	0		1
% 2	0	0	0	0		92	92	92	92		92	92	92	92	92	92	92	92	92	92	0	0	0	0		2
% 3	0	0	0	0		46	46	46	46		92	92	92	92	92	92	92	92	92	92	46	46	46	46		3
% 4	46	46	46	46		0	0	0	0		0	0	0	0	0	46	46	46	46	46	92	92	92	92		4
% 5	92	92	92	92		0	0	0	0		0	0	0	0	0	0	0	0	0	0	92	92	92	92		5
% 6	92	92	92	92		0	0	0	0		0	0	0	0	0	0	0	0	0	0	92	92	92	92		6
ID	22	22	22	22		116	116	116	116		110	110	110	110	110	93	93	93	93	93	24	24	24	24		ID
[DEG]	39~84.7	36~84.7	47~84.7	64~84.7		33~84.7	35~84.7	47~84.7	64~84.7		40~84.7	42~84.7	48~84.7	64~84.7	77~84.7	45~84.7	47~84.7	49~84.7	64~84.7	79~84.7	35~84.7	37~84.7	50~84.7	64~84.7		[DEG]
	1	1	1	1		1	1	1	1		1	1	1	1	1	1	1	1	1	1	1	1	1	1		
	8.7t	8.7t	8.7t	8.7t		8.7t	8.7t	8.7t	8.7t		8.7t	8.7t	8.7t	8.7t	8.7t	8.7t	8.7t	8.7t	8.7t	8.7t	8.7t	8.7t	8.7t	8.7t		

m	41.2	41.2	41.2	41.2	41.2	44.9	44.9	44.9	44.9	44.9	44.9	44.9	44.9	44.9	44.9	48.6	48.6	48.6	48.6	48.6	48.6	48.6	48.6	48.6	48.6	m
°	5	15	30	45	60	5	15	30	45	60	5	15	30	45	60	5	15	30	45	60	5	15	30	45	60	°
m 3.0																										3.0
3.5																										3.5
4.0																										4.0
4.5																										4.5
5.0																										5.0
6.0																										6.0
7.0																										7.0
8.0	4.3																									8.0
9.0	4.3										4.0															9.0
10.0	4.3					3.0					4.0					3.2					3.6					10.0
11.0	4.3	4.3				3.0					4.0	4.0				3.2					3.6					11.0
12.0	4.3	4.3				3.0	3.0				4.0	4.0				3.2	3.2				3.6	3.6				12.0
14.0	4.3	4.3	3.9			3.0	3.0				4.0	4.0				3.2	3.2				3.6	3.6				14.0
16.0	4.3	4.3	3.7	3.2		3.0	3.0	3.0			4.0	4.0	3.7			3.2	3.2	3.2			3.6	3.6	3.6			16.0
18.0	4.3	4.3	3.5	3.1	2.6	3.0	3.0	3.0	2.9		4.0	4.0	3.5	3.0	2.6	3.2	3.2	3.2	3.0		3.6	3.6	3.5	3.0		18.0
20.0	4.3	4.1	3.4	3.0	2.6	3.0	3.0	3.0	2.9		4.0	4.0	3.4	2.9	2.6	3.2	3.2	3.2	2.9	2.6	3.6	3.6	3.3	2.9	2.6	20.0
22.0	4.3	4.0	3.3	2.9		3.0	3.0	3.0	2.8		4.0	3.9	3.2	2.9		3.2	3.2	3.2	2.8	2.5	3.6	3.6	3.2	2.8	2.5	22.0
24.0	4.3	3.8	3.2	2.8		3.0	3.0	3.0	2.7		4.0	3.7	3.1	2.8		3.2	3.2	3.1	2.7		3.6	3.6	3.1	2.8		24.0
26.0	4.2	3.6	3.0	2.7		3.0	3.0	2.9	2.6		4.0	3.6	3.0	2.7		3.2	3.2	3.0	2.7		3.6	3.5	3.0	2.7		26.0
28.0	3.8	3.5	2.9	2.7		3.0	3.0	2.8	2.6		3.9	3.5	2.9	2.7		3.2	3.2	2.9	2.6		3.6	3.4	2.9	2.6		28.0
30.0	2.9	3.3	2.9	2.6		3.0	3.0	2.7	2.5		3.1	3.3	2.9	2.6		3.2	3.2	2.8	2.6		3.2	3.3	2.8	2.6		30.0
32.0	2.2	2.6	2.8			3.0	2.9	2.7	2.5		2.3	2.7	2.8	2.6		3.1	3.1	2.7	2.5		2.5	2.8	2.8	2.5		32.0
34.0	1.6	1.9	2.3			2.8	2.7	2.6			1.7	2.0	2.4			2.5	2.7	2.6	2.5		1.8	2.2	2.6	2.5		34.0
36.0	1.0	1.3	1.6			2.7	2.6	2.5			1.2	1.4	1.8			1.9	2.2	2.5			1.3	1.6	1.9			36.0
38.0			1.1			2.2	2.4	2.4				0.9	1.2			1.4	1.6	1.9				1.1	1.4			38.0
40.0						1.8	2.0	2.2								1.0	1.2	1.4					0.9			40.0
42.0						1.4	1.5	1.7										1.0								42.0
44.0						1.0	1.2																			44.0
46.0																										46.0
48.0																										48.0
50.0																										50.0
52.0																										52.0
54.0																										54.0
56.0																										56.0
58.0																										58.0
60.0																										60.0
64.0																										64.0
% 1	92	92	92	92	92	0	0	0	0		92	92	92	92	92	46	46	46	46	46	92	92	92	92	92	1
% 2	92	92	92	92	92	46	46	46	46		92	92	92	92	92	92	92	92	92	92	92	92	92	92	92	2
% 3	92	92	92	92	92	92	92	92	92		92	92	92	92	92	92	92	92	92	92	92	92	92	92	92	3
% 4	92	92	92	92	92	92	92	92	92		92	92	92	92	92	92	92	92	92	92	92	92	92	92	92	4
% 5	0	0	0	0	0	92	92	92	92		46	46	46	46	46	92	92	92	92	92	92	92	92	92	92	5
% 6	0	0	0	0	0	92	92	92	92		0	0	0	0	0	46	46	46	46	46	0	0	0	0	0	6
ID	83	83	83	83	83	26	26	26	26		65	65	65	65	65	38	38	38	38	38	49	49	49	49	49	ID
[DEG]	50~84.7	52~84.7	51~84.7	64~84.7	78~84.7	43~84.7	44~84.7	49~84.7	64~84.7		53~84.7	52~84.7	55~84.7	64~84.7	79~84.7	52~84.7	53~84.7	52~84.7	64~84.7	78~84.7	57~84.7	56~84.7	55~84.7	64~84.7	78~84.7	[DEG]
	1	1	1	1	1	1	1	1	1		1	1	1	1	1	1	1	1	1	1	1	1	1	1	1	
	8.7t	8.7t	8.7t	8.7t	8.7t	8.7t	8.7t	8.7t	8.7t		8.7t	8.7t	8.7t	8.7t	8.7t	8.7t	8.7t	8.7t	8.7t	8.7t	8.7t	8.7t	8.7t	8.7t	8.7t	

フルオートラフィングジブ

FLJ	1.6m + 12.4m	18.7 t	8.0m x 7.5m	360 °	JPN

m	52.3	52.3	52.3	52.3	52.3	52.3	52.3	52.3	52.3	52.3	56.0	56.0	56.0	56.0	56.0	60.0	60.0	60.0	60.0	60.0	m
°	5	15	30	45	60	5	15	30	45	60	5	15	30	45	60	5	15	30	45	60	°
3.0																					3.0
3.5																					3.5
4.0																					4.0
4.5																					4.5
5.0																					5.0
6.0																					6.0
7.0																					7.0
8.0																					8.0
9.0																					9.0
10.0																					10.0
11.0	2.7					3.0															11.0
12.0	2.7					3.0					2.6										12.0
14.0	2.7	2.7				3.0	3.0				2.6	2.6				1.9					14.0
16.0	2.7	2.7	2.7			3.0	3.0	3.0			2.6	2.6				1.9	1.9				16.0
18.0	2.7	2.7	2.7			3.0	3.0	3.0			2.6	2.6	2.6			1.9	1.9	1.9			18.0
20.0	2.7	2.7	2.7	2.7	2.6	3.0	3.0	3.0	2.9	2.6	2.6	2.6	2.6	2.6		1.9	1.9	1.9	1.9		20.0
22.0	2.7	2.7	2.7	2.7	2.5	3.0	3.0	3.0	2.8	2.5	2.6	2.6	2.6	2.6	2.5	1.9	1.9	1.9	1.9	1.9	22.0
24.0	2.7	2.7	2.7	2.7		3.0	3.0	3.0	2.7		2.6	2.6	2.6	2.6	2.5	1.9	1.9	1.9	1.9	1.9	24.0
26.0	2.7	2.7	2.7	2.6		3.0	3.0	3.0	2.7		2.6	2.6	2.6	2.6		1.9	1.9	1.9	1.9		26.0
28.0	2.7	2.7	2.7	2.6		3.0	3.0	2.9	2.6		2.6	2.6	2.6	2.6		1.9	1.9	1.9	1.9		28.0
30.0	2.7	2.7	2.7	2.5		3.0	3.0	2.8	2.5		2.6	2.6	2.6	2.5		1.9	1.9	1.9	1.9		30.0
32.0	2.7	2.7	2.7	2.5		2.6	3.0	2.7	2.5		2.6	2.6	2.6	2.5		1.9	1.9	1.9	1.9		32.0
34.0	2.6	2.7	2.6	2.4		2.0	2.3	2.6	2.5		2.2	2.5	2.6	2.4		1.9	1.9	1.9	1.9		34.0
36.0	2.0	2.3	2.5	2.4		1.5	1.8	2.1	2.4		1.6	1.9	2.3	2.4		1.5	1.8	1.9	1.9		36.0
38.0	1.5	1.8	2.1			1.0	1.2	1.6			1.1	1.4	1.7	2.0		1.0	1.3	1.6	1.9		38.0
40.0	1.1	1.3	1.6					1.1				0.9	1.2					1.2	1.4		40.0
42.0		0.9	1.1																		42.0
44.0																					44.0
46.0																					46.0
48.0																					48.0
50.0																					50.0
52.0																					52.0
54.0																					54.0
56.0																					56.0
58.0																					58.0
60.0																					60.0
64.0																					64.0
% 1	46	46	46	46	46	92	92	92	92	92	92	92	92	92	92	100	100	100	100	100	1
% 2	92	92	92	92	92	92	92	92	92	92	92	92	92	92	92	100	100	100	100	100	2
% 3	92	92	92	92	92	92	92	92	92	92	92	92	92	92	92	100	100	100	100	100	3
% 4	92	92	92	92	92	92	92	92	92	92	92	92	92	92	92	100	100	100	100	100	4
% 5	92	92	92	92	92	92	92	92	92	92	92	92	92	92	92	100	100	100	100	100	5
% 6	92	92	92	92	92	46	46	46	46	46	92	92	92	92	92	100	100	100	100	100	6
ID	28	28	28	28	28	39	39	39	39	39	29	29	29	29	29	19	19	19	19	19	ID
[DEG]	55~84.7	54~84.7	56~84.7	65~84.7	79~84.7	57~84.7	59~84.7	58~84.7	65~84.7	79~84.7	60~84.7	59~84.7	61~84.7	65~84.7	79~84.7	62~84.7	64~84.7	64~84.7	65~84.7	79~84.7	[DEG]
	1	1	1	1	1	1	1	1	1	1	1	1	1	1	1	1	1	1	1	1	
	8.7t	8.7t	8.7t	8.7t	8.7t	8.7t	8.7t	8.7t	8.7t	8.7t	8.7t	8.7t	8.7t	8.7t	8.7t	8.7t	8.7t	8.7t	8.7t	8.7t	

FLJ	1.6m + 17.4m	18.7 t	8.0m x 7.5m	360 °	JPN

m	11.4	11.4	11.4	11.4	11.4	15.1	15.1	15.1	15.1	15.1	15.1	15.1	15.1	15.1	15.1	15.1	15.1	15.1	15.1	15.1	18.8	18.8	18.8	18.8	18.8	m
°	5	15	30	45	60	5	15	30	45	60	5	15	30	45	60	5	15	30	45	60	5	15	30	45	60	°
3.0																										3.0
3.5																										3.5
4.0																										4.0
4.5	3.3																									4.5
5.0	3.3					3.1					3.3					3.3										5.0
6.0	3.3					3.1					3.3					3.3					2.7					6.0
7.0	3.3					3.1					3.3					3.3					2.7					7.0
8.0	3.3	3.3				3.1					3.3					3.3					2.7					8.0
9.0	3.3	3.3				3.1	3.1				3.3	3.3				3.3	3.3				2.7	2.7				9.0
10.0	3.3	3.2				3.1	3.1				3.3	3.3				3.3	3.3				2.7	2.7				10.0
11.0	3.3	3.0				3.1	3.1				3.3	3.1				3.3	3.1				2.7	2.7				11.0
12.0	3.2	2.9	2.5			3.1	2.9				3.3	2.9				3.3	3.0				2.7	2.7				12.0
14.0	2.9	2.6	2.3			3.1	2.7	2.3			3.1	2.7	2.3			3.1	2.7	2.3			2.7	2.7	2.3			14.0
16.0	2.6	2.4	2.1	1.8		2.8	2.5	2.2	1.9		2.8	2.5	2.2	1.9		2.8	2.5	2.2	1.9		2.7	2.5	2.2			16.0
18.0	2.4	2.2	1.9	1.7		2.6	2.3	2.0	1.8		2.6	2.3	2.0	1.8		2.6	2.3	2.0	1.8		2.7	2.4	2.0	1.8		18.0
20.0	2.2	2.0	1.8	1.6		2.4	2.1	1.9	1.7		2.4	2.1	1.9	1.7		2.4	2.1	1.9	1.7		2.5	2.2	1.9	1.7		20.0
22.0	2.0	1.9	1.7			2.2	2.0	1.8	1.6		2.2	2.0	1.8	1.6		2.2	2.0	1.8	1.6		2.3	2.1	1.8	1.6		22.0
24.0	1.8	1.7				2.1	1.9	1.7			2.1	1.9	1.7			2.1	1.9	1.7			2.2	2.0	1.8	1.6		24.0
26.0	1.7	1.6				1.9	1.8	1.6			1.9	1.8	1.6			1.9	1.8	1.6			2.0	1.9	1.7			26.0
28.0						1.8	1.6				1.8	1.6				1.8	1.6				1.9	1.8	1.6			28.0
30.0						1.6					1.6					1.6					1.9	1.7				30.0
32.0																					1.7	1.6				32.0
34.0																					1.6					34.0
36.0																										36.0
38.0																										38.0
40.0																										40.0
42.0																										42.0
44.0																										44.0
46.0																										46.0
48.0																										48.0
50.0																										50.0
52.0																										52.0
54.0																										54.0
56.0																										56.0
58.0																										58.0
60.0																										60.0
64.0																										64.0
% 1	0	0	0	0		0	0	0	0		0	0	0	0		0	0	0	0		0	0	0	0		1
% 2	0	0	0	0		0	0	0	0		0	0	0	0		46	46	46	46		0	0	0	0		2
% 3	0	0	0	0		0	0	0	0		46	46	46	46		0	0	0	0		0	0	0	0		3
% 4	0	0	0	0		46	46	46	46		0	0	0	0		0	0	0	0		0	0	0	0		4
% 5	0	0	0	0		0	0	0	0		0	0	0	0		0	0	0	0		46	46	46	46		5
% 6	0	0	0	0		0	0	0	0		0	0	0	0		0	0	0	0		46	46	46	46		6
ID	1	1	1	1		76	76	76	76		105	105	105	105		131	131	131	131		30	30	30	30		ID
[DEG]	0~84.7	0~84.7	0~84.7	0~84.7		23~84.7	36~84.7	47~84.7	63~84.7		23~84.7	36~84.7	47~84.7	63~84.7		23~84.7	36~84.7	47~84.7	63~84.7		21~84.7	33~84.7	49~84.7	63~84.7		[DEG]
	1	1	1	1		1	1	1	1		1	1	1	1		1	1	1	1		1	1	1	1		
	8.7t	8.7t	8.7t	8.7t		8.7t	8.7t	8.7t	8.7t		8.7t	8.7t	8.7t	8.7t		8.7t	8.7t	8.7t	8.7t		8.7t	8.7t	8.7t	8.7t		

FLJ	1.6m + 17.4m	18.7 t	8.0m x 7.5m	360 °	JPN

m	18.8	18.8	18.8	18.8	18.8	18.8	18.8	18.8	18.8	18.8	18.8	18.8	18.8	18.8	18.8	22.6	22.6	22.6	22.6	22.6	26.3	26.3	26.3	26.3	26.3	m
°	5	15	30	45	60	5	15	30	45	60	5	15	30	45	60	5	15	30	45	60	5	15	30	45	60	°
3.0																										3.0
3.5																										3.5
4.0																										4.0
4.5																										4.5
5.0																										5.0
6.0	2.9					3.2					3.3					2.5										6.0
7.0	2.9					3.2					3.3					2.5					3.3					7.0
8.0	2.9					3.2					3.3					2.5					3.3					8.0
9.0	2.9	2.9				3.2	3.2				3.3	3.3				2.5					3.3					9.0
10.0	2.9	2.9				3.2	3.2				3.3	3.3				2.5	2.5				3.3	3.3				10.0
11.0	2.9	2.9				3.2	3.2				3.3	3.2				2.5	2.5				3.3	3.3				11.0
12.0	2.9	2.9				3.2	3.0				3.3	3.0				2.5	2.5				3.3	3.2				12.0
14.0	2.9	2.8	2.3			3.2	2.8	2.3			3.2	2.8	2.3			2.5	2.5	2.3			3.3	2.9	2.4			14.0
16.0	2.9	2.5	2.2	1.9		2.9	2.6	2.2	1.9		3.0	2.6	2.2	1.9		2.5	2.5	2.2			3.2	2.7	2.2			16.0
18.0	2.7	2.4	2.1	1.8		2.7	2.4	2.1	1.8		2.7	2.4	2.1	1.8		2.5	2.4	2.1	1.8		3.0	2.5	2.1	1.9		18.0
20.0	2.5	2.2	1.9	1.7		2.5	2.2	1.9	1.7		2.5	2.2	2.0	1.7		2.5	2.3	1.9	1.7		2.8	2.4	2.0	1.8		20.0
22.0	2.3	2.1	1.9	1.6		2.3	2.1	1.9	1.6		2.4	2.1	1.9	1.6		2.4	2.1	1.9	1.7		2.6	2.3	1.9	1.7		22.0
24.0	2.2	2.0	1.8	1.6		2.2	2.0	1.8	1.6		2.2	2.0	1.8	1.6		2.3	2.0	1.8	1.6		2.4	2.1	1.9	1.6		24.0
26.0	2.1	1.9	1.7			2.1	1.9	1.7			2.1	1.9	1.7			2.1	1.9	1.7	1.5		2.3	2.0	1.8	1.6		26.0
28.0	1.9	1.8	1.6			2.0	1.8	1.6			2.0	1.8	1.6			2.0	1.8	1.7			2.2	1.9	1.7	1.5		28.0
30.0	1.9	1.7				1.9	1.7				1.9	1.7				1.9	1.8	1.6			2.1	1.9	1.7			30.0
32.0	1.7	1.6				1.7	1.6				1.7	1.6				1.8	1.7				2.0	1.8	1.6			32.0
34.0	1.6					1.6					1.6					1.8	1.6				1.9	1.7	1.6			34.0
36.0																1.7					1.8	1.7				36.0
38.0																					1.5	1.6				38.0
40.0																					1.1					40.0
42.0																										42.0
44.0																										44.0
46.0																										46.0
48.0																										48.0
50.0																										50.0
52.0																										52.0
54.0																										54.0
56.0																										56.0
58.0																										58.0
60.0																										60.0
64.0																										64.0
1	0	0	0	0		0	0	0	0		0	0	0	0		0	0	0	0		92	92	92	92		1
2	0	0	0	0		0	0	0	0		46	46	46	46		0	0	0	0		92	92	92	92		2
3	0	0	0	0		46	46	46	46		46	46	46	46		0	0	0	0		0	0	0	0		3
4	46	46	46	46		46	46	46	46		0	0	0	0		0	0	0	0		0	0	0	0		4
5	46	46	46	46		0	0	0	0		0	0	0	0		46	46	46	46		0	0	0	0		5
6	0	0	0	0		0	0	0	0		0	0	0	0		92	92	92	92		0	0	0	0		6
ID	58	58	58	58		88	88	88	88		113	113	113	113		20	20	20	20		134	134	134	134		ID
[DEG]	21~84.7	32~84.7	49~84.7	63~84.7		21~84.7	32~84.7	49~84.7	63~84.7		21~84.7	32~84.7	49~84.7	63~84.7		28~84.7	37~84.7	51~84.7	63~84.7		25~84.7	34~84.7	47~84.7	62~84.7		[DEG]
	1	1	1	1		1	1	1	1		1	1	1	1		1	1	1	1		1	1	1	1		
	8.7t	8.7t	8.7t	8.7t		8.7t	8.7t	8.7t	8.7t		8.7t	8.7t	8.7t	8.7t		8.7t	8.7t	8.7t	8.7t		8.7t	8.7t	8.7t	8.7t		

m	30.0	30.0	30.0	30.0	30.0	30.0	30.0	30.0	30.0	30.0	33.7	33.7	33.7	33.7	33.7	37.4	37.4	37.4	37.4	37.4	37.4	37.4	37.4	37.4	37.4	m
°	5	15	30	45	60	5	15	30	45	60	5	15	30	45	60	5	15	30	45	60	5	15	30	45	60	°
3.0																										3.0
3.5																										3.5
4.0																										4.0
4.5																										4.5
5.0																										5.0
6.0																										6.0
7.0																										7.0
8.0	2.3					3.2					3.1															8.0
9.0	2.3					3.2					3.1					2.4					2.5					9.0
10.0	2.3					3.2					3.1					2.4					2.5					10.0
11.0	2.3	2.3				3.2	3.2				3.1					2.4					2.5					11.0
12.0	2.3	2.3				3.2	3.2				3.1	3.1				2.4	2.4				2.5					12.0
14.0	2.3	2.3				3.2	2.9				3.1	3.0				2.4	2.4				2.5	2.5				14.0
16.0	2.3	2.3	2.2			3.2	2.8	2.3			3.1	2.8	2.3			2.4	2.4	2.2			2.5	2.5				16.0
18.0	2.3	2.3	2.1			3.1	2.6	2.2	1.9		3.1	2.6	2.2			2.4	2.4	2.2			2.5	2.5	2.1			18.0
20.0	2.3	2.3	2.0	1.8		2.9	2.4	2.1	1.8	1.5	2.9	2.5	2.1	1.8		2.4	2.4	2.1	1.8		2.5	2.4	2.0	1.8		20.0
22.0	2.3	2.2	1.9	1.7		2.7	2.3	2.0	1.7	1.5	2.7	2.3	2.0	1.8		2.4	2.4	2.0	1.8	1.5	2.5	2.2	1.9	1.7	1.5	22.0
24.0	2.3	2.1	1.8	1.7		2.5	2.2	1.9	1.7		2.6	2.2	1.9	1.7		2.4	2.2	1.9	1.7	1.5	2.5	2.1	1.8	1.7	1.5	24.0
26.0	2.3	2.0	1.8	1.6		2.4	2.1	1.8	1.6		2.4	2.1	1.8	1.6		2.4	2.2	1.8	1.7		2.4	2.1	1.8	1.6		26.0
28.0	2.2	1.9	1.7	1.6		2.3	2.0	1.8	1.6		2.3	2.0	1.8	1.6		2.4	2.1	1.8	1.6		2.2	2.0	1.7	1.6		28.0
30.0	2.1	1.8	1.6	1.5		2.2	1.9	1.7	1.5		2.2	1.9	1.7	1.5		2.3	2.0	1.7	1.6		2.1	1.9	1.7	1.5		30.0
32.0	2.0	1.8	1.6			2.1	1.8	1.6			2.1	1.9	1.7	1.5		2.2	1.9	1.7	1.5		2.1	1.8	1.6	1.5		32.0
34.0	1.9	1.7	1.6			2.0	1.8	1.6			2.0	1.8	1.6			2.1	1.8	1.6	1.5		2.0	1.8	1.6	1.5		34.0
36.0		1.7	1.5			1.9	1.7	1.6			1.7	1.8	1.6			1.7	1.8	1.6			1.9	1.7	1.5			36.0
38.0		1.6				1.4	1.6				1.2	1.5	1.6			1.2	1.6	1.6			1.8	1.7	1.5			38.0
40.0		1.6				0.9	1.1					1.1					1.1	1.4			1.8	1.6	1.5			40.0
42.0		1.5																1.0			1.7	1.6	1.4			42.0
44.0																						1.5				44.0
46.0																						1.5				46.0
48.0																						1.5				48.0
50.0																										50.0
52.0																										52.0
54.0																										54.0
56.0																										56.0
58.0																										58.0
60.0																										60.0
64.0																										64.0
1	0	0	0	0		92	92	92	92	92	92	92	92	92		92	92	92	92	92	0	0	0	0	0	1
2	0	0	0	0		92	92	92	92	92	92	92	92	92		92	92	92	92	92	0	0	0	0	0	2
3	0	0	0	0		46	46	46	46	46	92	92	92	92		92	92	92	92	92	46	46	46	46	46	3
4	46	46	46	46		0	0	0	0	0	0	0	0	0		46	46	46	46	46	92	92	92	92	92	4
5	92	92	92	92		0	0	0	0	0	0	0	0	0		0	0	0	0	0	92	92	92	92	92	5
6	92	92	92	92		0	0	0	0	0	0	0	0	0		0	0	0	0	0	92	92	92	92	92	6
ID	22	22	22	22		116	116	116	116	116	110	110	110	110		93	93	93	93	93	24	24	24	24	24	ID
[DEG]	48~84.7	33~84.7	49~84.7	63~84.7		34~84.7	37~84.7	49~84.7	62~84.7	77~84.7	45~84.7	44~84.7	50~84.7	62~84.7		49~84.7	49~84.7	48~84.7	62~84.7	77~84.7	44~84.7	35~84.7	48~84.7	63~84.7	78~84.7	[DEG]
	1	1	1	1		1	1	1	1	1	1	1	1	1		1	1	1	1	1	1	1	1	1	1	
	8.7t	8.7t	8.7t	8.7t		8.7t	8.7t	8.7t	8.7t	8.7t	8.7t	8.7t	8.7t	8.7t		8.7t	8.7t	8.7t	8.7t	8.7t	8.7t	8.7t	8.7t	8.7t	8.7t	

フルオートラフィングジブ

FLJ	1.6m + 17.4m	18.7 t	8.0m x 7.5m	360 °	JPN

m	41.2	41.2	41.2	41.2	41.2	44.9	44.9	44.9	44.9	44.9	44.9	44.9	44.9	44.9	44.9	48.6	48.6	48.6	48.6	48.6	48.6	48.6	48.6	48.6	48.6	m
°	5	15	30	45	60	5	15	30	45	60	5	15	30	45	60	5	15	30	45	60	5	15	30	45	60	°
3.0																										3.0
3.5																										3.5
4.0																										4.0
4.5																										4.5
5.0																										5.0
6.0																										6.0
7.0																										7.0
8.0																										8.0
9.0																										9.0
10.0	2.7										2.4															10.0
11.0	2.7					1.9					2.4					2.0					2.2					11.0
12.0	2.7					1.9					2.4					2.0					2.2					12.0
14.0	2.7	2.7				1.9	1.9				2.4	2.4				2.0	2.0				2.2	2.2				14.0
16.0	2.7	2.7				1.9	1.9				2.4	2.4				2.0	2.0				2.2	2.2				16.0
18.0	2.7	2.6	2.1			1.9	1.9	1.9			2.4	2.4	2.1			2.0	2.0				2.2	2.2				18.0
20.0	2.7	2.5	2.1	1.8		1.9	1.9	1.9			2.4	2.4	2.0			2.0	2.0	2.0			2.2	2.2	2.0			20.0
22.0	2.7	2.4	2.0	1.8	1.5	1.9	1.9	1.9	1.7		2.4	2.4	2.0	1.7		2.0	2.0	1.9	1.7		2.2	2.2	1.9	1.7		22.0
24.0	2.6	2.3	1.9	1.7	1.5	1.9	1.9	1.8	1.7	1.5	2.4	2.2	1.9	1.7	1.5	2.0	2.0	1.9	1.7	1.5	2.2	2.2	1.9	1.7	1.5	24.0
26.0	2.5	2.2	1.8	1.7		1.9	1.9	1.8	1.6	1.5	2.4	2.2	1.8	1.7	1.5	2.0	2.0	1.8	1.6	1.5	2.2	2.1	1.8	1.6	1.5	26.0
28.0	2.4	2.1	1.8	1.6		1.9	1.9	1.7	1.6		2.4	2.1	1.8	1.6		2.0	2.0	1.7	1.6		2.2	2.1	1.8	1.6		28.0
30.0	2.3	2.0	1.7	1.6		1.9	1.9	1.7	1.5		2.3	2.0	1.7	1.6		2.0	2.0	1.7	1.6		2.2	2.0	1.7	1.6		30.0
32.0	2.2	1.9	1.7	1.6		1.9	1.9	1.6	1.5		2.2	1.9	1.7	1.5		2.0	1.9	1.6	1.5		2.2	1.9	1.7	1.5		32.0
34.0	2.1	1.9	1.6	1.5		1.9	1.8	1.6	1.5		2.1	1.9	1.6	1.5		2.0	1.8	1.6	1.5		2.1	1.9	1.6	1.5		34.0
36.0	1.7	1.8	1.6	1.5		1.9	1.7	1.5	1.5		1.8	1.8	1.6	1.5		2.0	1.8	1.6	1.5		1.9	1.8	1.6	1.5		36.0
38.0	1.2	1.6	1.6			1.9	1.7	1.5			1.3	1.7	1.5			1.9	1.7	1.5	1.4		1.4	1.7	1.5	1.4		38.0
40.0		1.1	1.5			1.8	1.6	1.5			0.9	1.2	1.5			1.5	1.7	1.5			1.0	1.3	1.5			40.0
42.0			1.0			1.8	1.6	1.4					1.1			1.1	1.4	1.5				0.9	1.3			42.0
44.0						1.5	1.6	1.4									1.0	1.3								44.0
46.0						1.2	1.4	1.4										0.9								46.0
48.0						0.9	1.1																			48.0
50.0																										50.0
52.0																										52.0
54.0																										54.0
56.0																										56.0
58.0																										58.0
60.0																										60.0
64.0																										64.0
1	92	92	92	92	92	0	0	0	0	0	92	92	92	92	92	46	46	46	46	46	92	92	92	92	92	1
2	92	92	92	92	92	46	46	46	46	46	92	92	92	92	92	92	92	92	92	92	92	92	92	92	92	2
3	92	92	92	92	92	92	92	92	92	92	92	92	92	92	92	92	92	92	92	92	92	92	92	92	92	3
4	92	92	92	92	92	92	92	92	92	92	92	92	92	92	92	92	92	92	92	92	92	92	92	92	92	4
5	0	0	0	0	0	92	92	92	92	92	46	46	46	46	46	92	92	92	92	92	92	92	92	92	92	5
6	0	0	0	0	0	92	92	92	92	92	0	0	0	0	0	46	46	46	46	46	0	0	0	0	0	6
ID	83	83	83	83	83	26	26	26	26	26	65	65	65	65	65	38	38	38	38	38	49	49	49	49	49	ID
[DEG]	53~84.7	52~84.7	52~84.7	62~84.7	79~84.7	44~84.7	46~84.7	51~84.7	65~84.7	78~84.7	53~84.7	56~84.7	56~84.7	65~84.7	78~84.7	54~84.7	54~84.7	54~84.7	65~84.7	79~84.7	56~84.7	56~84.7	59~84.7	65~84.7	79~84.7	[DEG]
	1	1	1	1	1	1	1	1	1	1	1	1	1	1	1	1	1	1	1	1	1	1	1	1	1	
	8.7t	8.7t	8.7t	8.7t	8.7t	8.7t	8.7t	8.7t	8.7t	8.7t	8.7t	8.7t	8.7t	8.7t	8.7t	8.7t	8.7t	8.7t	8.7t	8.7t	8.7t	8.7t	8.7t	8.7t	8.7t	

m	52.3	52.3	52.3	52.3	52.3	52.3	52.3	52.3	52.3	52.3	56.0	56.0	56.0	56.0	56.0	60.0	60.0	60.0	60.0	60.0						m
°	5	15	30	45	60	5	15	30	45	60	5	15	30	45	60	5	15	30	45	60						°
3.0																										3.0
3.5																										3.5
4.0																										4.0
4.5																										4.5
5.0																										5.0
6.0																										6.0
7.0																										7.0
8.0																										8.0
9.0																										9.0
10.0																										10.0
11.0																										11.0
12.0						2.0																				12.0
14.0	1.8					2.0					1.8															14.0
16.0	1.8	1.8				2.0	2.0				1.8	1.8				1.0										16.0
18.0	1.8	1.8				2.0	2.0				1.8	1.8				1.0	1.0									18.0
20.0	1.8	1.8	1.8			2.0	2.0	2.0			1.8	1.8				1.0	1.0									20.0
22.0	1.8	1.8	1.8			2.0	2.0	1.9			1.8	1.8	1.8			1.0	1.0	1.0								22.0
24.0	1.8	1.8	1.8	1.6		2.0	2.0	1.9	1.7		1.8	1.8	1.8	1.6		1.0	1.0	1.0								24.0
26.0	1.8	1.8	1.8	1.6	1.5	2.0	2.0	1.8	1.6	1.5	1.8	1.8	1.8	1.6	1.5	1.0	1.0	1.0	1.0							26.0
28.0	1.8	1.8	1.7	1.6	1.4	2.0	2.0	1.7	1.6	1.4	1.8	1.8	1.7	1.6	1.4	1.0	1.0	1.0	1.0	1.0						28.0
30.0	1.8	1.8	1.7	1.5		2.0	2.0	1.7	1.5		1.8	1.8	1.7	1.5		1.0	1.0	1.0	1.0	1.0						30.0
32.0	1.8	1.8	1.6	1.5		2.0	1.9	1.6	1.5		1.8	1.8	1.6	1.5		1.0	1.0	1.0	1.0							32.0
34.0	1.8	1.8	1.6	1.5		2.0	1.8	1.6	1.5		1.8	1.8	1.6	1.5		1.0	1.0	1.0	1.0							34.0
36.0	1.8	1.8	1.5	1.4		2.0	1.8	1.6	1.5		1.8	1.8	1.5	1.4		1.0	1.0	1.0	1.0							36.0
38.0	1.8	1.7	1.5	1.4		1.5	1.7	1.5	1.4		1.7	1.7	1.5	1.4		1.0	1.0	1.0	1.0							38.0
40.0	1.6	1.7	1.5	1.4		1.1	1.4	1.5	1.4		1.2	1.6	1.5	1.4		1.0	1.0	1.0	1.0							40.0
42.0	1.2	1.5	1.4				1.0	1.4				1.1	1.4	1.4			1.0	1.0	1.0							42.0
44.0	0.9	1.1	1.4					1.0					1.1					1.0	1.0							44.0
46.0			1.1																							46.0
48.0																										48.0
50.0																										50.0
52.0																										52.0
54.0																										54.0
56.0																										56.0
58.0																										58.0
60.0																										60.0
64.0																										64.0
1	46	46	46	46	46	92	92	92	92	92	92	92	92	92	92	100	100	100	100	100						1
2	92	92	92	92	92	92	92	92	92	92	92	92	92	92	92	100	100	100	100	100						2
3	92	92	92	92	92	92	92	92	92	92	92	92	92	92	92	100	100	100	100	100						3
4	92	92	92	92	92	92	92	92	92	92	92	92	92	92	92	100	100	100	100	100						4
5	92	92	92	92	92	92	92	92	92	92	92	92	92	92	92	100	100	100	100	100						5
6	92	92	92	92	92	46	46	46	46	46	92	92	92	92	92	100	100	100	100	100						6
ID	28	28	28	28	28	39	39	39	39	39	29	29	29	29	29	19	19	19	19	19						ID
[DEG]	55~84.7	57~84.7	57~84.7	65~84.7	78~84.7	59~84.7	59~84.7	59~84.7	65~84.7	78~84.7	61~84.7	62~84.7	62~84.7	66~84.7	79~84.7	63~84.7	64~84.7	64~84.7	66~84.7	78~84.7						[DEG]
	1	1	1	1	1	1	1	1	1	1	1	1	1	1	1	1	1	1	1	1						
	8.7t	8.7t	8.7t	8.7t	8.7t	8.7t	8.7t	8.7t	8.7t	8.7t	8.7t	8.7t	8.7t	8.7t	8.7t	8.7t	8.7t	8.7t	8.7t	8.7t						

FLJ	1.6m + 7.4m	18.7 t	8.0m x 6.2m	360 °	JPN

m	11.4	11.4	11.4	11.4	11.4	15.1	15.1	15.1	15.1	15.1	15.1	15.1	15.1	15.1	15.1	15.1	15.1	15.1	15.1	15.1	18.8	18.8	18.8	18.8	18.8	m
°	5	15	30	45	60	5	15	30	45	60	5	15	30	45	60	5	15	30	45	60	5	15	30	45	60	°
3.0	7.3					7.3					7.3					7.3					7.3					3.0
3.5	7.3					7.3					7.3					7.3					7.3					3.5
4.0	7.3	7.3				7.3	7.3				7.3	7.3				7.3	7.3				7.3					4.0
4.5	7.3	7.3				7.3	7.3				7.3	7.3				7.3	7.3				7.3					4.5
5.0	7.3	7.3	7.3			7.3	7.3				7.3	7.3				7.3	7.3				7.3	7.3				5.0
6.0	7.3	7.3	7.3			7.3	7.3	7.3			7.3	7.3	7.3			7.3	7.3	7.3			7.3	7.3	7.3			6.0
7.0	7.3	7.3	7.3	6.5	5.0	7.3	7.3	7.3	6.7		7.3	7.3	7.3	6.7		7.3	7.3	7.3	6.7		7.3	7.3	7.3			7.0
8.0	7.3	7.3	7.3	6.3	4.9	7.3	7.3	7.3	6.5	5.0	7.3	7.3	7.3	6.5	5.0	7.3	7.3	7.3	6.5	5.0	7.3	7.3	7.3	6.6	5.0	8.0
9.0	7.3	7.3	7.2	6.0		7.3	7.3	7.3	6.3	4.9	7.3	7.3	7.3	6.3	4.9	7.3	7.3	7.3	6.3	4.9	7.3	7.3	7.3	6.4	4.9	9.0
10.0	7.3	7.3	6.9	5.9		7.3	7.3	7.3	6.1		7.3	7.3	7.3	6.1		7.3	7.3	7.3	6.1		7.3	7.3	7.3	6.3	4.9	10.0
11.0	7.3	7.3	6.6	5.7		7.3	7.3	7.0	5.9		7.3	7.3	7.0	5.9		7.3	7.3	7.0	5.9		7.3	7.3	7.3	6.1		11.0
12.0	7.3	7.0	6.3			7.3	7.3	6.8	5.8		7.3	7.3	6.8	5.8		7.3	7.3	6.8	5.8		7.3	7.3	7.2	6.0		12.0
14.0	6.4	6.2	5.9			7.3	7.1	6.3			7.3	7.1	6.3			7.3	7.1	6.3			7.3	7.3	6.7	5.7		14.0
16.0	5.7	5.7				6.8	6.4	5.9			6.8	6.4	5.9			6.8	6.4	5.9			7.3	7.1	6.3			16.0
18.0						6.0	5.9				6.0	5.9				6.0	5.9				7.0	6.6	6.0			18.0
20.0						5.5					5.5					5.5					6.3	6.1				20.0
22.0																					5.8	5.7				22.0
24.0																					5.3					24.0
26.0																										26.0
28.0																										28.0
30.0																										30.0
32.0																										32.0
34.0																										34.0
36.0																										36.0
38.0																										38.0
40.0																										40.0
42.0																										42.0
44.0																										44.0
46.0																										46.0
48.0																										48.0
50.0																										50.0
52.0																										52.0
54.0																										54.0
56.0																										56.0
58.0																										58.0
60.0																										60.0
64.0																										64.0
% 1	0	0	0	0	0	0	0	0	0	0	0	0	0	0	0	0	0	0	0	0	0	0	0	0	0	1
% 2	0	0	0	0	0	0	0	0	0	0	0	0	0	0	0	46	46	46	46	46	0	0	0	0	0	2
% 3	0	0	0	0	0	0	0	0	0	0	46	46	46	46	46	0	0	0	0	0	0	0	0	0	0	3
% 4	0	0	0	0	0	46	46	46	46	46	0	0	0	0	0	0	0	0	0	0	0	0	0	0	0	4
% 5	0	0	0	0	0	0	0	0	0	0	0	0	0	0	0	0	0	0	0	0	46	46	46	46	46	5
% 6	0	0	0	0	0	0	0	0	0	0	0	0	0	0	0	0	0	0	0	0	46	46	46	46	46	6
ID	1	1	1	1	1	76	76	76	76	76	105	105	105	105	105	131	131	131	131	131	30	30	30	30	30	ID
[DEG]	0~84.7	0~84.7	0~84.7	0~84.7	0~84.7	24~84.7	37~84.7	48~84.7	64~84.7	75~84.7	24~84.7	37~84.7	48~84.7	64~84.7	75~84.7	24~84.7	37~84.7	48~84.7	64~84.7	75~84.7	22~84.7	34~84.7	50~84.7	63~84.7	75~84.7	[DEG]
	1	1	1	1	1	1	1	1	1	1	1	1	1	1	1	1	1	1	1	1	1	1	1	1	1	
	8.7t	8.7t	8.7t	8.7t	8.7t	8.7t	8.7t	8.7t	8.7t	8.7t	8.7t	8.7t	8.7t	8.7t	8.7t	8.7t	8.7t	8.7t	8.7t	8.7t	8.7t	8.7t	8.7t	8.7t	8.7t	

m	18.8	18.8	18.8	18.8	18.8	18.8	18.8	18.8	18.8	18.8	18.8	18.8	18.8	18.8	18.8	22.6	22.6	22.6	22.6	22.6	26.3	26.3	26.3	26.3	26.3	m
°	5	15	30	45	60	5	15	30	45	60	5	15	30	45	60	5	15	30	45	60	5	15	30	45	60	°
3.0	7.3					7.3					7.3															3.0
3.5	7.3					7.3					7.3															3.5
4.0	7.3					7.3	7.3				7.3	7.3				7.3										4.0
4.5	7.3					7.3	7.3				7.3	7.3				7.3										4.5
5.0	7.3	7.3				7.3	7.3				7.3	7.3				7.3	7.3				7.3					5.0
6.0	7.3	7.3	7.3			7.3	7.3	7.3			7.3	7.3	7.3			7.3	7.3				7.3	7.3				6.0
7.0	7.3	7.3	7.3	6.9		7.3	7.3	7.3	6.9		7.3	7.3	7.3	6.9		7.3	7.3	7.3			7.3	7.3				7.0
8.0	7.3	7.3	7.3	6.6	5.0	7.3	7.3	7.3	6.6	5.0	7.3	7.3	7.3	6.6	5.0	7.3	7.3	7.3	6.8		7.3	7.3	7.3			8.0
9.0	7.3	7.3	7.3	6.4	4.9	7.3	7.3	7.3	6.4	4.9	7.3	7.3	7.3	6.4	4.9	7.3	7.3	7.3	6.6	5.0	7.3	7.3	7.3	6.7	5.0	9.0
10.0	7.3	7.3	7.3	6.3	4.9	7.3	7.3	7.3	6.3	4.9	7.3	7.3	7.3	6.3	4.9	7.3	7.3	7.3	6.4	4.9	7.3	7.3	7.3	6.5	4.9	10.0
11.0	7.3	7.3	7.3	6.1		7.3	7.3	7.3	6.1		7.3	7.3	7.3	6.1		7.3	7.3	7.3	6.3	4.8	7.3	7.3	7.3	6.4	4.9	11.0
12.0	7.3	7.3	7.2	6.0		7.3	7.3	7.2	6.0		7.3	7.3	7.2	6.0		7.3	7.3	7.3	6.1		7.3	7.3	7.3	6.3	4.8	12.0
14.0	7.3	7.3	6.7	5.7		7.3	7.3	6.7	5.7		7.3	7.3	6.7	5.7		7.2	6.9	6.5	5.9		7.3	7.3	7.3	6.0		14.0
16.0	7.3	7.1	6.3			7.3	7.1	6.3			7.3	7.1	6.3			6.4	6.1	5.9	5.7		7.3	7.3	7.0	5.8		16.0
18.0	7.0	6.6	6.0			7.0	6.6	6.0			7.0	6.6	6.0			5.7	5.5	5.3			7.3	7.3	6.6	5.7		18.0
20.0	6.3	6.1				6.3	6.1				6.3	6.1				5.1	5.0	4.9			5.7	5.9	6.3			20.0
22.0	5.8	5.7				5.8	5.7				5.8	5.7				4.6	4.5	4.5			4.4	4.6	4.9			22.0
24.0	5.3					5.1					4.7					4.2	4.1				3.3	3.5	3.8			24.0
26.0																3.8	3.8				2.5	2.6				26.0
28.0																					1.8	1.9				28.0
30.0																					1.1					30.0
32.0																										32.0
34.0																										34.0
36.0																										36.0
38.0																										38.0
40.0																										40.0
42.0																										42.0
44.0																										44.0
46.0																										46.0
48.0																										48.0
50.0																										50.0
52.0																										52.0
54.0																										54.0
56.0																										56.0
58.0																										58.0
60.0																										60.0
64.0																										64.0
% 1	0	0	0	0	0	0	0	0	0	0	0	0	0	0	0	0	0	0	0	0	92	92	92	92	92	1
% 2	0	0	0	0	0	0	0	0	0	0	46	46	46	46	46	0	0	0	0	0	92	92	92	92	92	2
% 3	0	0	0	0	0	46	46	46	46	46	46	46	46	46	46	0	0	0	0	0	0	0	0	0	0	3
% 4	46	46	46	46	46	46	46	46	46	46	0	0	0	0	0	0	0	0	0	0	0	0	0	0	0	4
% 5	46	46	46	46	46	0	0	0	0	0	0	0	0	0	0	46	46	46	46	46	0	0	0	0	0	5
% 6	0	0	0	0	0	0	0	0	0	0	0	0	0	0	0	92	92	92	92	92	0	0	0	0	0	6
ID	58	58	58	58	58	88	88	88	88	88	113	113	113	113	113	20	20	20	20	20	134	134	134	134	134	ID
[DEG]	21~84.7	33~84.7	50~84.7	63~84.7	75~84.7	21~84.7	33~84.7	50~84.7	63~84.7	75~84.7	21~84.7	33~84.7	50~84.7	63~84.7	75~84.7	29~84.7	30~84.7	46~84.7	63~84.7	76~84.7	26~84.7	34~84.7	47~84.7	63~84.7	76~84.7	[DEG]
	1	1	1	1	1	1	1	1	1	1	1	1	1	1	1	1	1	1	1	1	1	1	1	1	1	
	8.7t	8.7t	8.7t	8.7t	8.7t	8.7t	8.7t	8.7t	8.7t	8.7t	8.7t	8.7t	8.7t	8.7t	8.7t	8.7t	8.7t	8.7t	8.7t	8.7t	8.7t	8.7t	8.7t	8.7t	8.7t	

フルオートラフィングジブ

FLJ	1.6m + 7.4m	18.7 t	8.0m x 6.2m	360 °	JPN

m	30.0	30.0	30.0	30.0	30.0	30.0	30.0	30.0	30.0	30.0	33.7	33.7	33.7	33.7	33.7	37.4	37.4	37.4	37.4	37.4	37.4	37.4	37.4	37.4	37.4	m
°	5	15	30	45	60	5	15	30	45	60	5	15	30	45	60	5	15	30	45	60	5	15	30	45	60	°
3.0																										3.0
3.5																										3.5
4.0																										4.0
4.5																										4.5
5.0	7.3					7.3																				5.0
6.0	7.3	7.3				7.3	7.3				7.3															6.0
7.0	7.3	7.3				7.3	7.3				7.3	7.3				7.1					7.3					7.0
8.0	7.3	7.3	7.3			7.3	7.3	7.3			7.3	7.3				7.1	7.1				7.3	7.3				8.0
9.0	7.3	7.3	7.3			7.3	7.3	7.3	6.8		7.3	7.3	7.3			7.1	7.1				7.3	7.3				9.0
10.0	7.3	7.3	7.3	6.6	5.0	7.3	7.3	7.3	6.6	5.0	7.3	7.3	7.3	6.7		7.1	7.1	7.1			7.3	7.3	7.3			10.0
11.0	7.3	7.3	7.3	6.5	4.9	7.3	7.3	7.3	6.5	4.9	7.3	7.3	7.3	6.6	4.9	7.1	7.1	7.1	6.7	5.0	7.3	7.3	7.2	6.7		11.0
12.0	7.3	7.3	7.1	6.4	4.9	7.3	7.3	7.3	6.4	4.9	7.3	7.3	7.3	6.5	4.9	7.1	7.1	7.1	6.6	4.9	7.3	7.3	6.9	6.4	4.9	12.0
14.0	6.8	6.6	6.3	6.1		7.3	7.3	7.3	6.1		7.3	7.3	7.3	6.2	4.8	7.1	7.1	7.1	6.3	4.8	6.9	6.6	6.2	5.9	4.8	14.0
16.0	6.0	5.8	5.6	5.5		7.3	7.3	7.2	5.9		7.3	7.3	7.3	6.0		7.1	7.1	7.1	6.1		6.1	5.9	5.7	5.5		16.0
18.0	5.3	5.2	5.1	5.0		7.3	7.3	6.9	5.8		7.3	7.3	7.1	5.9		7.1	7.1	7.1	6.0		5.5	5.4	5.2	5.0		18.0
20.0	4.8	4.7	4.6	4.5		5.6	6.0	6.4	5.6		5.6	6.0	6.4	5.7		5.8	6.1	6.5	5.8		5.0	4.9	4.7	4.6		20.0
22.0	4.3	4.3	4.2			4.4	4.6	5.0			4.4	4.6	5.0	5.2		4.5	4.8	5.1	5.4		4.6	4.5	4.3	4.3		22.0
24.0	3.9	3.9	3.8			3.3	3.6	3.8			3.3	3.6	3.9			3.4	3.7	4.0	4.2		4.2	4.1	4.0	4.0		24.0
26.0	3.5	3.5	3.5			2.5	2.7	2.9			2.5	2.7	2.9			2.6	2.8	3.1			3.9	3.8	3.7			26.0
28.0	3.2	3.1				1.8	1.9				1.8	1.9	2.1			1.9	2.1	2.3			3.6	3.5	3.5			28.0
30.0	2.8	2.8				1.1	1.2				1.1	1.3	1.4			1.2	1.4	1.6			3.3	3.3	3.2			30.0
32.0	2.5	2.5																1.0			2.7	2.8	2.9			32.0
34.0	2.2																				2.3	2.3				34.0
36.0																					1.8	1.9				36.0
38.0																					1.5	1.5				38.0
40.0																					1.2					40.0
42.0																										42.0
44.0																										44.0
46.0																										46.0
48.0																										48.0
50.0																										50.0
52.0																										52.0
54.0																										54.0
56.0																										56.0
58.0																										58.0
60.0																										60.0
64.0																										64.0
1	0	0	0	0	0	92	92	92	92	92	92	92	92	92	92	92	92	92	92	92	0	0	0	0	0	1
2	0	0	0	0	0	92	92	92	92	92	92	92	92	92	92	92	92	92	92	92	0	0	0	0	0	2
3	0	0	0	0	0	46	46	46	46	46	92	92	92	92	92	92	92	92	92	92	46	46	46	46	46	3
4	46	46	46	46	46	0	0	0	0	0	0	0	0	0	0	46	46	46	46	46	92	92	92	92	92	4
5	92	92	92	92	92	0	0	0	0	0	0	0	0	0	0	0	0	0	0	0	92	92	92	92	92	5
6	92	92	92	92	92	0	0	0	0	0	0	0	0	0	0	0	0	0	0	0	92	92	92	92	92	6
ID	22	22	22	22	22	116	116	116	116	116	110	110	110	110	110	93	93	93	93	93	24	24	24	24	24	ID
[DEG]	24~84.7	32~84.7	50~84.7	63~84.7	78~84.7	36~84.7	38~84.7	49~84.7	63~84.7	78~84.7	43~84.7	45~84.7	46~84.7	63~84.7	76~84.7	49~84.7	50~84.7	47~84.7	62~84.7	78~84.7	27~84.7	34~84.7	48~84.7	63~84.7	78~84.7	[DEG]
	1	1	1	1	1	1	1	1	1	1	1	1	1	1	1	1	1	1	1	1	1	1	1	1	1	
	8.7t	8.7t	8.7t	8.7t	8.7t	8.7t	8.7t	8.7t	8.7t	8.7t	8.7t	8.7t	8.7t	8.7t	8.7t	8.7t	8.7t	8.7t	8.7t	8.7t	8.7t	8.7t	8.7t	8.7t	8.7t	

m	41.2	41.2	41.2	41.2	41.2	44.9	44.9	44.9	44.9	44.9	44.9	44.9	44.9	44.9	44.9	48.6	48.6	48.6	48.6	48.6	48.6	48.6	48.6	48.6	48.6	m
°	5	15	30	45	60	5	15	30	45	60	5	15	30	45	60	5	15	30	45	60	5	15	30	45	60	°
3.0																										3.0
3.5																										3.5
4.0																										4.0
4.5																										4.5
5.0																										5.0
6.0																										6.0
7.0	7.3																									7.0
8.0	7.3										6.5															8.0
9.0	7.3	7.3				4.6					6.5					4.8					5.4					9.0
10.0	7.3	7.3	7.3			4.6	4.6				6.5	6.5				4.8					5.4					10.0
11.0	7.3	7.3	7.3			4.6	4.6				6.5	6.5	6.5			4.8	4.8				5.4	5.4				11.0
12.0	7.3	7.3	7.3	6.6	4.9	4.6	4.6	4.6			6.5	6.5	6.5			4.8	4.8	4.8			5.4	5.4	5.4			12.0
14.0	7.3	7.3	7.3	6.4	4.9	4.6	4.6	4.6	4.6	4.6	6.5	6.5	6.5	6.5	4.9	4.8	4.8	4.8	4.8	4.8	5.4	5.4	5.4	5.4	4.9	14.0
16.0	7.3	7.3	7.3	6.2		4.6	4.6	4.6	4.6	4.6	6.5	6.5	6.5	6.3	4.8	4.8	4.8	4.8	4.8	4.8	5.4	5.4	5.4	5.4	4.8	16.0
18.0	7.3	7.3	7.2	6.1		4.6	4.6	4.6	4.6		6.5	6.5	6.5	6.1		4.8	4.8	4.8	4.8		5.4	5.4	5.4	5.4		18.0
20.0	5.9	6.2	6.7	5.9		4.6	4.6	4.6	4.6		6.0	6.4	6.5	6.0		4.8	4.8	4.8	4.8		5.4	5.4	5.4	5.4		20.0
22.0	4.6	4.9	5.3	5.5		4.6	4.5	4.3	4.2		4.7	5.0	5.4	5.7		4.8	4.8	4.8	4.7		4.9	5.2	5.4	5.4		22.0
24.0	3.5	3.8	4.1	4.3		4.3	4.2	4.0	4.0		3.7	4.0	4.3	4.5		4.4	4.6	4.6	4.5		3.8	4.1	4.4	4.7		24.0
26.0	2.7	2.9	3.2	3.4		4.0	3.9	3.8	3.7		2.8	3.1	3.4	3.6		3.5	3.7	4.0	4.2		3.0	3.2	3.5	3.7		26.0
28.0	2.0	2.2	2.4			3.5	3.6	3.5	3.5		2.1	2.3	2.6	2.7		2.8	3.0	3.2	3.4		2.3	2.5	2.7	2.9		28.0
30.0	1.3	1.5	1.7			2.9	3.0	3.2			1.5	1.7	1.9			2.2	2.3	2.5	2.7		1.6	1.8	2.1	2.2		30.0
32.0						2.3	2.4	2.6					1.3			1.6	1.8	2.0					1.5			32.0
34.0						1.8	2.0	2.1								1.2	1.3	1.5								34.0
36.0						1.4	1.5	1.6																		36.0
38.0						1.1	1.1																			38.0
40.0																										40.0
42.0																										42.0
44.0																										44.0
46.0																										46.0
48.0																										48.0
50.0																										50.0
52.0																										52.0
54.0																										54.0
56.0																										56.0
58.0																										58.0
60.0																										60.0
64.0																										64.0
1	92	92	92	92	92	0	0	0	0	0	92	92	92	92	92	46	46	46	46	46	92	92	92	92	92	1
2	92	92	92	92	92	46	46	46	46	46	92	92	92	92	92	92	92	92	92	92	92	92	92	92	92	2
3	92	92	92	92	92	92	92	92	92	92	92	92	92	92	92	92	92	92	92	92	92	92	92	92	92	3
4	92	92	92	92	92	92	92	92	92	92	92	92	92	92	92	92	92	92	92	92	92	92	92	92	92	4
5	0	0	0	0	0	92	92	92	92	92	46	46	46	46	46	92	92	92	92	92	92	92	92	92	92	5
6	0	0	0	0	0	92	92	92	92	92	0	0	0	0	0	46	46	46	46	46	0	0	0	0	0	6
ID	83	83	83	83	83	26	26	26	26	26	65	65	65	65	65	38	38	38	38	38	49	49	49	49	49	ID
[DEG]	53~84.7	54~84.7	55~84.7	63~84.7	79~84.7	45~84.7	46~84.7	50~84.7	63~84.7	78~84.7	56~84.7	57~84.7	56~84.7	63~84.7	78~84.7	54~84.7	55~84.7	57~84.7	63~84.7	79~84.7	59~84.7	60~84.7	59~84.7	63~84.7	79~84.7	[DEG]
	1	1	1	1	1	1	1	1	1	1	1	1	1	1	1	1	1	1	1	1	1	1	1	1	1	
	8.7t	8.7t	8.7t	8.7t	8.7t	8.7t	8.7t	8.7t	8.7t	8.7t	8.7t	8.7t	8.7t	8.7t	8.7t	8.7t	8.7t	8.7t	8.7t	8.7t	8.7t	8.7t	8.7t	8.7t	8.7t	

FLJ	1.6m + 7.4m	18.7 t	8.0m x 6.2m	360 °	JPN

m	52.3	52.3	52.3	52.3	52.3	52.3	52.3	52.3	52.3	52.3	56.0	56.0	56.0	56.0	56.0	60.0	60.0	60.0	60.0	60.0						m
°	5	15	30	45	60	5	15	30	45	60	5	15	30	45	60	5	15	30	45	60						°
3.0																										3.0
3.5																										3.5
4.0																										4.0
4.5																										4.5
5.0																										5.0
6.0																										6.0
7.0																										7.0
8.0																										8.0
9.0																										9.0
10.0	3.9					4.4																				10.0
11.0	3.9					4.4					3.7															11.0
12.0	3.9	3.9				4.4	4.4				3.7															12.0
14.0	3.9	3.9	3.9			4.4	4.4	4.4			3.7	3.7	3.7			3.2	3.2									14.0
16.0	3.9	3.9	3.9	3.9	3.9	4.4	4.4	4.4	4.4	4.4	3.7	3.7	3.7	3.7	3.7	3.2	3.2	3.2	3.2							16.0
18.0	3.9	3.9	3.9	3.9	3.9	4.4	4.4	4.4	4.4	4.4	3.7	3.7	3.7	3.7	3.7	3.2	3.2	3.2	3.2	3.2						18.0
20.0	3.9	3.9	3.9	3.9		4.4	4.4	4.4	4.4		3.7	3.7	3.7	3.7		3.2	3.2	3.2	3.2	3.2						20.0
22.0	3.9	3.9	3.9	3.9		4.4	4.4	4.4	4.4		3.7	3.7	3.7	3.7		3.2	3.2	3.2	3.2							22.0
24.0	3.9	3.9	3.9	3.9		4.0	4.3	4.4	4.4		3.7	3.7	3.7	3.7		3.2	3.2	3.2	3.2							24.0
26.0	3.7	3.9	3.7	3.6		3.2	3.4	3.7	3.9		3.3	3.6	3.7	3.6		3.2	3.2	3.2	3.2							26.0
28.0	2.9	3.1	3.4	3.4		2.4	2.6	2.9	3.1		2.6	2.8	3.1	3.3		2.5	2.8	3.0	3.2							28.0
30.0	2.3	2.5	2.7	2.8		1.8	2.0	2.2	2.4		2.0	2.2	2.4	2.6			2.1	2.4	2.5							30.0
32.0	1.8	1.9	2.1					1.7					1.8	2.0					1.9							32.0
34.0	1.3	1.5	1.6																							34.0
36.0																										36.0
38.0																										38.0
40.0																										40.0
42.0																										42.0
44.0																										44.0
46.0																										46.0
48.0																										48.0
50.0																										50.0
52.0																										52.0
54.0																										54.0
56.0																										56.0
58.0																										58.0
60.0																										60.0
64.0																										64.0
1	46	46	46	46	46	92	92	92	92	92	92	92	92	92	92	100	100	100	100	100						1
2	92	92	92	92	92	92	92	92	92	92	92	92	92	92	92	100	100	100	100	100						2
3	92	92	92	92	92	92	92	92	92	92	92	92	92	92	92	100	100	100	100	100						3
4	92	92	92	92	92	92	92	92	92	92	92	92	92	92	92	100	100	100	100	100						4
5	92	92	92	92	92	92	92	92	92	92	92	92	92	92	92	100	100	100	100	100						5
6	92	92	92	92	92	46	46	46	46	46	92	92	92	92	92	100	100	100	100	100						6
ID	28	28	28	28	28	39	39	39	39	39	29	29	29	29	29	19	19	19	19	19						ID
[DEG]	57~84.7	58~84.7	60~84.7	65~84.7	78~84.7	62~84.7	63~84.7	62~84.7	65~84.7	78~84.7	64~84.7	65~84.7	64~84.7	65~84.7	79~84.7	68~84.7	67~84.7	69~84.7	67~84.7	79~84.7						[DEG]
	1	1	1	1	1	1	1	1	1	1	1	1	1	1	1	1	1	1	1	1						
	8.7t	8.7t	8.7t	8.7t	8.7t	8.7t	8.7t	8.7t	8.7t	8.7t	8.7t	8.7t	8.7t	8.7t	8.7t	8.7t	8.7t	8.7t	8.7t	8.7t						

FLJ	1.6m + 12.4m	18.7 t	8.0m x 6.2m	360 °	JPN

m	11.4	11.4	11.4	11.4	11.4	15.1	15.1	15.1	15.1	15.1	15.1	15.1	15.1	15.1	15.1	15.1	15.1	15.1	15.1	15.1	18.8	18.8	18.8	18.8	18.8	m
°	5	15	30	45	60	5	15	30	45	60	5	15	30	45	60	5	15	30	45	60	5	15	30	45	60	°
3.0	4.3																									3.0
3.5	4.3																									3.5
4.0	4.3					4.3					4.3					4.3					4.3					4.0
4.5	4.3					4.3					4.3					4.3					4.3					4.5
5.0	4.3					4.3					4.3					4.3					4.3					5.0
6.0	4.3	4.3				4.3	4.3				4.3	4.3				4.3	4.3				4.3					6.0
7.0	4.3	4.3				4.3	4.3				4.3	4.3				4.3	4.3				4.3	4.3				7.0
8.0	4.3	4.3				4.3	4.3				4.3	4.3				4.3	4.3				4.3	4.3				8.0
9.0	4.3	4.3	4.3			4.3	4.3	4.3			4.3	4.3	4.3			4.3	4.3	4.3			4.3	4.3				9.0
10.0	4.3	4.3	4.1			4.3	4.3	4.3			4.3	4.3	4.3			4.3	4.3	4.3			4.3	4.3	4.3			10.0
11.0	4.3	4.3	3.9	3.2		4.3	4.3	4.1	3.3		4.3	4.3	4.1	3.3		4.3	4.3	4.1	3.3		4.3	4.3	4.1			11.0
12.0	4.3	4.3	3.7	3.1		4.3	4.3	3.9	3.2		4.3	4.3	3.9	3.2		4.3	4.3	3.9	3.2		4.3	4.3	3.9	3.3		12.0
14.0	4.3	4.0	3.3	2.9		4.3	4.3	3.5	3.0		4.3	4.3	3.5	3.0		4.3	4.3	3.5	3.0		4.3	4.3	3.7	3.1		14.0
16.0	3.8	3.5	3.0	2.7		4.3	3.9	3.3	2.8		4.3	3.9	3.3	2.8		4.3	3.9	3.3	2.8		4.3	4.1	3.4	2.9		16.0
18.0	3.4	3.2	2.8			3.9	3.6	3.0	2.7		3.9	3.6	3.0	2.7		3.9	3.6	3.0	2.7		4.3	3.8	3.2	2.8		18.0
20.0	3.0	2.9				3.5	3.3	2.9			3.5	3.3	2.9			3.5	3.3	2.9			4.0	3.5	3.0	2.7		20.0
22.0	2.7					3.2	3.0				3.2	3.0				3.2	3.0				3.6	3.3	2.9			22.0
24.0						2.9	2.8				2.9	2.8				2.9	2.8				3.3	3.1	2.8			24.0
26.0																					3.0	2.9				26.0
28.0																					2.8					28.0
30.0																										30.0
32.0																										32.0
34.0																										34.0
36.0																										36.0
38.0																										38.0
40.0																										40.0
42.0																										42.0
44.0																										44.0
46.0																										46.0
48.0																										48.0
50.0																										50.0
52.0																										52.0
54.0																										54.0
56.0																										56.0
58.0																										58.0
60.0																										60.0
64.0																										64.0
1	0	0	0	0		0	0	0	0		0	0	0	0		0	0	0	0		0	0	0	0		1
2	0	0	0	0		0	0	0	0		0	0	0	0		46	46	46	46		0	0	0	0		2
3	0	0	0	0		0	0	0	0		46	46	46	46		0	0	0	0		0	0	0	0		3
4	0	0	0	0		46	46	46	46		0	0	0	0		0	0	0	0		0	0	0	0		4
5	0	0	0	0		0	0	0	0		0	0	0	0		0	0	0	0		46	46	46	46		5
6	0	0	0	0		0	0	0	0		0	0	0	0		0	0	0	0		46	46	46	46		6
ID	1	1	1	1		76	76	76	76		105	105	105	105		131	131	131	131		30	30	30	30		ID
[DEG]	0~84.7	0~84.7	0~84.7	0~84.7		29~84.7	32~84.7	51~84.7	60~84.7		29~84.7	31~84.7	51~84.7	60~84.7		29~84.7	31~84.7	51~84.7	60~84.7		26~84.7	37~84.7	46~84.7	60~84.7		[DEG]
	1	1	1	1		1	1	1	1		1	1	1	1		1	1	1	1		1	1	1	1		
	8.7t	8.7t	8.7t	8.7t		8.7t	8.7t	8.7t	8.7t		8.7t	8.7t	8.7t	8.7t		8.7t	8.7t	8.7t	8.7t		8.7t	8.7t	8.7t	8.7t		

フルオートラフィングジブ

FLJ	1.6m + 12.4m	18.7 t	8.0m x 6.2m	360 °	JPN

m	18.8	18.8	18.8	18.8	18.8	18.8	18.8	18.8	18.8	18.8	18.8	18.8	18.8	18.8	18.8	22.6	22.6	22.6	22.6	22.6	26.3	26.3	26.3	26.3	26.3	m
°	5	15	30	45	60	5	15	30	45	60	5	15	30	45	60	5	15	30	45	60	5	15	30	45	60	°
3.0																										3.0
3.5																										3.5
4.0	4.3					4.3					4.3															4.0
4.5	4.3					4.3					4.3															4.5
5.0	4.3					4.3					4.3					4.3										5.0
6.0	4.3					4.3					4.3					4.3					4.3					6.0
7.0	4.3	4.3				4.3	4.3				4.3	4.3				4.3	4.3				4.3					7.0
8.0	4.3	4.3				4.3	4.3				4.3	4.3				4.3	4.3				4.3	4.3				8.0
9.0	4.3	4.3				4.3	4.3				4.3	4.3				4.3	4.3				4.3	4.3				9.0
10.0	4.3	4.3	4.3			4.3	4.3	4.3			4.3	4.3	4.3			4.3	4.3				4.3	4.3				10.0
11.0	4.3	4.3	4.1			4.3	4.3	4.2			4.3	4.3	4.2			4.3	4.3	4.1			4.3	4.3	4.3			11.0
12.0	4.3	4.3	4.0	3.3		4.3	4.3	4.0	3.3		4.3	4.3	4.0	3.3		4.3	4.3	4.0			4.3	4.3	4.2			12.0
14.0	4.3	4.3	3.7	3.1		4.3	4.3	3.7	3.1		4.3	4.3	3.7	3.1		4.3	4.3	3.7	3.1		4.3	4.3	3.9	3.2	2.7	14.0
16.0	4.3	4.1	3.5	2.9		4.3	4.2	3.5	2.9		4.3	4.2	3.5	2.9		4.3	4.2	3.5	3.0		4.3	4.3	3.7	3.0	2.6	16.0
18.0	4.3	3.8	3.2	2.8		4.3	3.8	3.2	2.8		4.3	3.9	3.2	2.8		4.3	3.9	3.3	2.9		4.3	4.2	3.5	2.9		18.0
20.0	4.0	3.6	3.0	2.7		4.0	3.6	3.0	2.7		4.0	3.6	3.0	2.7		4.2	3.7	3.1	2.8		4.3	4.0	3.3	2.8		20.0
22.0	3.6	3.3	2.9			3.6	3.3	2.9			3.6	3.3	2.9			3.9	3.4	3.0			4.3	3.7	3.2	2.7		22.0
24.0	3.3	3.1	2.8			3.3	3.1	2.8			3.3	3.1	2.8			3.6	3.3	2.9			4.0	3.5	3.0			24.0
26.0	3.0	2.9				3.0	2.9				3.0	2.9				3.4	3.1	2.8			3.4	3.3	2.9			26.0
28.0	2.8					2.8					2.8					3.2	3.0				2.7	2.9	2.8			28.0
30.0																2.9	2.8				2.1	2.3				30.0
32.0																2.7					1.5	1.7				32.0
34.0																					1.0	1.2				34.0
36.0																										36.0
38.0																										38.0
40.0																										40.0
42.0																										42.0
44.0																										44.0
46.0																										46.0
48.0																										48.0
50.0																										50.0
52.0																										52.0
54.0																										54.0
56.0																										56.0
58.0																										58.0
60.0																										60.0
64.0																										64.0
1	0	0	0	0		0	0	0	0		0	0	0	0		0	0	0	0		92	92	92	92	92	1
2	0	0	0	0		0	0	0	0		46	46	46	46		0	0	0	0		92	92	92	92	92	2
3	0	0	0	0		46	46	46	46		46	46	46	46		0	0	0	0		0	0	0	0	0	3
4	46	46	46	46		46	46	46	46		0	0	0	0		0	0	0	0		0	0	0	0	0	4
5	46	46	46	46		0	0	0	0		0	0	0	0		46	46	46	46		0	0	0	0	0	5
6	0	0	0	0		0	0	0	0		0	0	0	0		92	92	92	92		0	0	0	0	0	6
ID	58	58	58	58		88	88	88	88		113	113	113	113		20	20	20	20		134	134	134	134	134	ID
[DEG]	26~84.7	37~84.7	46~84.7	60~84.7		26~84.7	37~84.7	46~84.7	60~84.7		26~84.7	37~84.7	46~84.7	60~84.7		24~84.7	34~84.7	49~84.7	65~84.7		29~84.7	31~84.7	50~84.7	64~84.7	77~84.7	[DEG]
	1	1	1	1		1	1	1	1		1	1	1	1		1	1	1	1		1	1	1	1	1	
	8.7t	8.7t	8.7t	8.7t		8.7t	8.7t	8.7t	8.7t		8.7t	8.7t	8.7t	8.7t		8.7t	8.7t	8.7t	8.7t		8.7t	8.7t	8.7t	8.7t	8.7t	

m	30.0	30.0	30.0	30.0	30.0	30.0	30.0	30.0	30.0	30.0	33.7	33.7	33.7	33.7	33.7	37.4	37.4	37.4	37.4	37.4	37.4	37.4	37.4	37.4	37.4	m
°	5	15	30	45	60	5	15	30	45	60	5	15	30	45	60	5	15	30	45	60	5	15	30	45	60	°
3.0																										3.0
3.5																										3.5
4.0																										4.0
4.5																										4.5
5.0																										5.0
6.0	4.0					4.3																				6.0
7.0	4.0					4.3					4.3					4.1										7.0
8.0	4.0					4.3					4.3					4.1					4.3					8.0
9.0	4.0	4.0				4.3	4.3				4.3	4.3				4.1					4.3					9.0
10.0	4.0	4.0				4.3	4.3				4.3	4.3				4.1	4.1				4.3	4.3				10.0
11.0	4.0	4.0				4.3	4.3	4.3			4.3	4.3				4.1	4.1				4.3	4.3				11.0
12.0	4.0	4.0	4.0			4.3	4.3	4.2			4.3	4.3	4.2			4.1	4.1				4.3	4.3				12.0
14.0	4.0	4.0	3.7	3.2		4.3	4.3	3.9	3.2		4.3	4.3	3.9	3.3		4.1	4.1	3.9			4.3	4.3	3.7			14.0
16.0	4.0	4.0	3.5	3.1		4.3	4.3	3.7	3.1		4.3	4.3	3.7	3.2	2.6	4.1	4.1	3.7	3.2	2.6	4.3	4.3	3.5	3.1		16.0
18.0	4.0	4.0	3.4	3.0		4.3	4.3	3.5	3.0		4.3	4.3	3.6	3.0	2.6	4.1	4.1	3.6	3.1	2.6	4.3	4.1	3.4	3.0		18.0
20.0	4.0	3.8	3.2	2.9		4.3	4.1	3.4	2.9		4.3	4.1	3.4	2.9		4.1	4.1	3.4	3.0		4.3	3.9	3.2	2.9		20.0
22.0	4.0	3.6	3.1	2.8		4.3	3.8	3.2	2.8		4.3	3.9	3.3	2.8		4.1	3.9	3.3	2.9		4.2	3.7	3.1	2.8		22.0
24.0	3.7	3.4	3.0	2.7		4.2	3.6	3.1	2.7		4.2	3.7	3.1	2.8		4.1	3.8	3.2	2.8		3.9	3.5	3.0	2.7		24.0
26.0	3.4	3.3	2.9			3.4	3.5	3.0			3.3	3.5	3.0	2.7		3.3	3.6	3.0	2.7		3.6	3.4	2.9	2.7		26.0
28.0	3.1	3.1	2.8			2.6	2.9	2.9			2.6	2.9	2.9			2.6	2.9	2.9	2.7		3.3	3.2	2.8	2.6		28.0
30.0	2.8	2.8	2.7			2.0	2.2	2.5			1.9	2.2	2.5			2.0	2.3	2.6			3.1	3.0	2.7			30.0
32.0	2.5	2.5	2.5			1.4	1.7	1.9			1.4	1.6	1.9			1.4	1.7	2.0			2.9	2.8	2.7			32.0
34.0	2.2	2.2				0.9	1.1				0.9	1.1	1.4			0.9	1.2	1.5			2.7	2.7	2.6			34.0
36.0		2.0																0.9			2.3	2.4	2.4			36.0
38.0																					1.9	2.1				38.0
40.0																					1.6	1.7				40.0
42.0																					1.3	1.4				42.0
44.0																										44.0
46.0																										46.0
48.0																										48.0
50.0																										50.0
52.0																										52.0
54.0																										54.0
56.0																										56.0
58.0																										58.0
60.0																										60.0
64.0																										64.0
1	0	0	0	0		92	92	92	92		92	92	92	92	92	92	92	92	92	92	0	0	0	0		1
2	0	0	0	0		92	92	92	92		92	92	92	92	92	92	92	92	92	92	0	0	0	0		2
3	0	0	0	0		46	46	46	46		92	92	92	92	92	92	92	92	92	92	46	46	46	46		3
4	46	46	46	46		0	0	0	0		0	0	0	0	0	46	46	46	46	46	92	92	92	92		4
5	92	92	92	92		0	0	0	0		0	0	0	0	0	0	0	0	0	0	92	92	92	92		5
6	92	92	92	92		0	0	0	0		0	0	0	0	0	0	0	0	0	0	92	92	92	92		6
ID	22	22	22	22		116	116	116	116		110	110	110	110	110	93	93	93	93	93	24	24	24	24		ID
[DEG]	39~84.7	36~84.7	47~84.7	64~84.7		37~84.7	40~84.7	46~84.7	64~84.7		44~84.7	46~84.7	48~84.7	64~84.7	77~84.7	48~84.7	51~84.7	49~84.7	64~84.7	79~84.7	35~84.7	36~84.7	50~84.7	64~84.7		[DEG]
	1	1	1	1		1	1	1	1		1	1	1	1	1	1	1	1	1	1	1	1	1	1		
	8.7t	8.7t	8.7t	8.7t		8.7t	8.7t	8.7t	8.7t		8.7t	8.7t	8.7t	8.7t	8.7t	8.7t	8.7t	8.7t	8.7t	8.7t	8.7t	8.7t	8.7t	8.7t		

FLJ	1.6m + 12.4m	18.7 t	8.0m x 6.2m	360 °	JPN

m	41.2	41.2	41.2	41.2	41.2	44.9	44.9	44.9	44.9	44.9	44.9	44.9	44.9	44.9	44.9	48.6	48.6	48.6	48.6	48.6	48.6	48.6	48.6	48.6	48.6	m
°	5	15	30	45	60	5	15	30	45	60	5	15	30	45	60	5	15	30	45	60	5	15	30	45	60	°
3.0																										3.0
3.5																										3.5
4.0																										4.0
4.5																										4.5
5.0																										5.0
6.0																										6.0
7.0																										7.0
8.0	4.3																									8.0
9.0	4.3										4.0															9.0
10.0	4.3					3.0					4.0					3.2					3.6					10.0
11.0	4.3	4.3				3.0					4.0	4.0				3.2					3.6					11.0
12.0	4.3	4.3				3.0	3.0				4.0	4.0				3.2	3.2				3.6	3.6				12.0
14.0	4.3	4.3	3.9			3.0	3.0				4.0	4.0				3.2	3.2				3.6	3.6				14.0
16.0	4.3	4.3	3.7	3.2		3.0	3.0	3.0			4.0	4.0	3.7			3.2	3.2	3.2			3.6	3.6	3.6			16.0
18.0	4.3	4.3	3.5	3.1	2.6	3.0	3.0	3.0	2.9		4.0	4.0	3.5	3.0	2.6	3.2	3.2	3.2	3.0		3.6	3.6	3.5	3.0		18.0
20.0	4.3	4.1	3.4	3.0	2.6	3.0	3.0	3.0	2.9		4.0	4.0	3.4	2.9	2.6	3.2	3.2	3.2	2.9	2.6	3.6	3.6	3.3	2.9	2.6	20.0
22.0	4.3	4.0	3.3	2.9		3.0	3.0	3.0	2.8		4.0	3.9	3.2	2.9		3.2	3.2	3.2	2.8	2.5	3.6	3.6	3.2	2.8	2.5	22.0
24.0	4.3	3.8	3.2	2.8		3.0	3.0	3.0	2.7		4.0	3.7	3.1	2.8		3.2	3.2	3.1	2.7		3.6	3.6	3.1	2.8		24.0
26.0	3.4	3.6	3.0	2.7		3.0	3.0	2.9	2.6		3.5	3.6	3.0	2.7		3.2	3.2	3.0	2.7		3.6	3.5	3.0	2.7		26.0
28.0	2.6	3.0	2.9	2.7		3.0	3.0	2.8	2.6		2.7	3.1	2.9	2.7		3.2	3.2	2.9	2.6		2.8	3.2	2.9	2.6		28.0
30.0	2.0	2.3	2.7	2.6		3.0	3.0	2.7	2.5		2.1	2.4	2.8	2.6		2.7	3.0	2.8	2.6		2.2	2.5	2.8	2.6		30.0
32.0	1.5	1.7	2.1			2.8	2.9	2.7	2.5		1.6	1.9	2.2	2.4		2.2	2.4	2.7	2.5		1.7	1.9	2.3	2.5		32.0
34.0		1.2	1.5			2.3	2.5	2.6				1.4	1.7			1.7	1.9	2.2	2.4			1.4	1.8	2.0		34.0
36.0						1.9	2.1	2.3								1.3	1.5	1.7								36.0
38.0						1.5	1.7	1.9									1.1	1.3								38.0
40.0						1.2	1.3	1.5																		40.0
42.0						0.9	1.0	1.2																		42.0
44.0																										44.0
46.0																										46.0
48.0																										48.0
50.0																										50.0
52.0																										52.0
54.0																										54.0
56.0																										56.0
58.0																										58.0
60.0																										60.0
64.0																										64.0
1	92	92	92	92	92	0	0	0	0		92	92	92	92	92	46	46	46	46	46	92	92	92	92	92	1
2	92	92	92	92	92	46	46	46	46		92	92	92	92	92	92	92	92	92	92	92	92	92	92	92	2
3	92	92	92	92	92	92	92	92	92		92	92	92	92	92	92	92	92	92	92	92	92	92	92	92	3
4	92	92	92	92	92	92	92	92	92		92	92	92	92	92	92	92	92	92	92	92	92	92	92	92	4
5	0	0	0	0	0	92	92	92	92		46	46	46	46	46	92	92	92	92	92	92	92	92	92	92	5
6	0	0	0	0	0	92	92	92	92		0	0	0	0	0	46	46	46	46	46	0	0	0	0	0	6
ID	83	83	83	83	83	26	26	26	26		65	65	65	65	65	38	38	38	38	38	49	49	49	49	49	ID
[DEG]	55~84.7	54~84.7	57~84.7	64~84.7	78~84.7	45~84.7	47~84.7	49~84.7	64~84.7		58~84.7	58~84.7	60~84.7	64~84.7	79~84.7	56~84.7	56~84.7	58~84.7	64~84.7	78~84.7	61~84.7	60~84.7	63~84.7	64~84.7	78~84.7	[DEG]
	1	1	1	1	1	1	1	1	1		1	1	1	1	1	1	1	1	1	1	1	1	1	1	1	
	8.7t	8.7t	8.7t	8.7t	8.7t	8.7t	8.7t	8.7t	8.7t		8.7t	8.7t	8.7t	8.7t	8.7t	8.7t	8.7t	8.7t	8.7t	8.7t	8.7t	8.7t	8.7t	8.7t	8.7t	

m	52.3	52.3	52.3	52.3	52.3	52.3	52.3	52.3	52.3	52.3	56.0	56.0	56.0	56.0	56.0	60.0	60.0	60.0	60.0	60.0						m
°	5	15	30	45	60	5	15	30	45	60	5	15	30	45	60	5	15	30	45	60						°
3.0																										3.0
3.5																										3.5
4.0																										4.0
4.5																										4.5
5.0																										5.0
6.0																										6.0
7.0																										7.0
8.0																										8.0
9.0																										9.0
10.0																										10.0
11.0	2.7					3.0																				11.0
12.0	2.7					3.0					2.6															12.0
14.0	2.7	2.7				3.0	3.0				2.6	2.6				1.9										14.0
16.0	2.7	2.7	2.7			3.0	3.0	3.0			2.6	2.6				1.9	1.9									16.0
18.0	2.7	2.7	2.7			3.0	3.0	3.0			2.6	2.6	2.6			1.9	1.9	1.9								18.0
20.0	2.7	2.7	2.7	2.7	2.6	3.0	3.0	3.0	2.9	2.6	2.6	2.6	2.6	2.6		1.9	1.9	1.9	1.9							20.0
22.0	2.7	2.7	2.7	2.7	2.5	3.0	3.0	3.0	2.8	2.5	2.6	2.6	2.6	2.6	2.5	1.9	1.9	1.9	1.9	1.9						22.0
24.0	2.7	2.7	2.7	2.7		3.0	3.0	3.0	2.7		2.6	2.6	2.6	2.6	2.5	1.9	1.9	1.9	1.9	1.9						24.0
26.0	2.7	2.7	2.7	2.6		3.0	3.0	3.0	2.7		2.6	2.6	2.6	2.6		1.9	1.9	1.9	1.9							26.0
28.0	2.7	2.7	2.7	2.6		3.0	3.0	2.9	2.6		2.6	2.6	2.6	2.6		1.9	1.9	1.9	1.9							28.0
30.0	2.7	2.7	2.7	2.5		2.4	2.7	2.8	2.5		2.5	2.6	2.6	2.5		1.9	1.9	1.9	1.9							30.0
32.0	2.3	2.5	2.7	2.5		1.8	2.1	2.4	2.5		1.9	2.2	2.6	2.5			1.9	1.9	1.9							32.0
34.0	1.8	2.0	2.3	2.4			1.6	1.9	2.1			1.7	2.0	2.3				1.9	1.9							34.0
36.0	1.4	1.6	1.8	2.0				1.4	1.6				1.6	1.8												36.0
38.0		1.2	1.4																							38.0
40.0																										40.0
42.0																										42.0
44.0																										44.0
46.0																										46.0
48.0																										48.0
50.0																										50.0
52.0																										52.0
54.0																										54.0
56.0																										56.0
58.0																										58.0
60.0																										60.0
64.0																										64.0
1	46	46	46	46	46	92	92	92	92	92	92	92	92	92	92	100	100	100	100	100						1
2	92	92	92	92	92	92	92	92	92	92	92	92	92	92	92	100	100	100	100	100						2
3	92	92	92	92	92	92	92	92	92	92	92	92	92	92	92	100	100	100	100	100						3
4	92	92	92	92	92	92	92	92	92	92	92	92	92	92	92	100	100	100	100	100						4
5	92	92	92	92	92	92	92	92	92	92	92	92	92	92	92	100	100	100	100	100						5
6	92	92	92	92	92	46	46	46	46	46	92	92	92	92	92	100	100	100	100	100						6
ID	28	28	28	28	28	39	39	39	39	39	29	29	29	29	29	19	19	19	19	19						ID
[DEG]	59~84.7	59~84.7	61~84.7	64~84.7	79~84.7	63~84.7	63~84.7	63~84.7	64~84.7	79~84.7	65~84.7	65~84.7	65~84.7	66~84.7	79~84.7	69~84.7	69~84.7	69~84.7	70~84.7	79~84.7						[DEG]
	1	1	1	1	1	1	1	1	1	1	1	1	1	1	1	1	1	1	1	1						
	8.7t	8.7t	8.7t	8.7t	8.7t	8.7t	8.7t	8.7t	8.7t	8.7t	8.7t	8.7t	8.7t	8.7t	8.7t	8.7t	8.7t	8.7t	8.7t	8.7t						

フルオートラフィングジブ

FLJ	1.6m + 17.4m	18.7 t	8.0m x 6.2m	360 °	JPN

m	11.4	11.4	11.4	11.4	11.4	15.1	15.1	15.1	15.1	15.1	15.1	15.1	15.1	15.1	15.1	15.1	15.1	15.1	15.1	15.1	18.8	18.8	18.8	18.8	18.8	m
°	5	15	30	45	60	5	15	30	45	60	5	15	30	45	60	5	15	30	45	60	5	15	30	45	60	°
m 3.0																										3.0
3.5																										3.5
4.0																										4.0
4.5	3.3																									4.5
5.0	3.3					3.1					3.3					3.3										5.0
6.0	3.3					3.1					3.3					3.3					2.7					6.0
7.0	3.3					3.1					3.3					3.3					2.7					7.0
8.0	3.3	3.3				3.1					3.3					3.3					2.7					8.0
9.0	3.3	3.3				3.1	3.1				3.3	3.3				3.3	3.3				2.7	2.7				9.0
10.0	3.3	3.2				3.1	3.1				3.3	3.3				3.3	3.3				2.7	2.7				10.0
11.0	3.3	3.0				3.1	3.1				3.3	3.1				3.3	3.1				2.7	2.7				11.0
12.0	3.2	2.9	2.5			3.1	2.9				3.3	2.9				3.3	3.0				2.7	2.7				12.0
14.0	2.9	2.6	2.3			3.1	2.7	2.3			3.1	2.7	2.3			3.1	2.7	2.3			2.7	2.7	2.3			14.0
16.0	2.6	2.4	2.1	1.8		2.8	2.5	2.2	1.9		2.8	2.5	2.2	1.9		2.8	2.5	2.2	1.9		2.7	2.5	2.2			16.0
18.0	2.4	2.2	1.9	1.7		2.6	2.3	2.0	1.8		2.6	2.3	2.0	1.8		2.6	2.3	2.0	1.8		2.7	2.4	2.0	1.8		18.0
20.0	2.2	2.0	1.8	1.6		2.4	2.1	1.9	1.7		2.4	2.1	1.9	1.7		2.4	2.1	1.9	1.7		2.5	2.2	1.9	1.7		20.0
22.0	2.0	1.9	1.7			2.2	2.0	1.8	1.6		2.2	2.0	1.8	1.6		2.2	2.0	1.8	1.6		2.3	2.1	1.8	1.6		22.0
24.0	1.8	1.7				2.1	1.9	1.7			2.1	1.9	1.7			2.1	1.9	1.7			2.2	2.0	1.8	1.6		24.0
26.0	1.7	1.6				1.9	1.8	1.6			1.9	1.8	1.6			1.9	1.8	1.6			2.0	1.9	1.7			26.0
28.0						1.8	1.6				1.8	1.6				1.8	1.6				1.9	1.8	1.6			28.0
30.0						1.6					1.6					1.6					1.9	1.7				30.0
32.0																					1.7	1.6				32.0
34.0																					1.6					34.0
36.0																										36.0
38.0																										38.0
40.0																										40.0
42.0																										42.0
44.0																										44.0
46.0																										46.0
48.0																										48.0
50.0																										50.0
52.0																										52.0
54.0																										54.0
56.0																										56.0
58.0																										58.0
60.0																										60.0
64.0																										64.0
% 1	0	0	0	0		0	0	0	0		0	0	0	0		0	0	0	0		0	0	0	0		1
% 2	0	0	0	0		0	0	0	0		0	0	0	0		46	46	46	46		0	0	0	0		2
% 3	0	0	0	0		0	0	0	0		46	46	46	46		0	0	0	0		0	0	0	0		3
% 4	0	0	0	0		46	46	46	46		0	0	0	0		0	0	0	0		0	0	0	0		4
% 5	0	0	0	0		0	0	0	0		0	0	0	0		0	0	0	0		46	46	46	46		5
% 6	0	0	0	0		0	0	0	0		0	0	0	0		0	0	0	0		46	46	46	46		6
ID	1	1	1	1		76	76	76	76		105	105	105	105		131	131	131	131		30	30	30	30		ID
[DEG]	0~84.7	0~84.7	0~84.7	0~84.7		23~84.7	36~84.7	47~84.7	63~84.7		23~84.7	36~84.7	47~84.7	63~84.7		23~84.7	36~84.7	47~84.7	63~84.7		21~84.7	33~84.7	49~84.7	63~84.7		[DEG]
	1	1	1	1		1	1	1	1		1	1	1	1		1	1	1	1		1	1	1	1		
	8.7t	8.7t	8.7t	8.7t		8.7t	8.7t	8.7t	8.7t		8.7t	8.7t	8.7t	8.7t		8.7t	8.7t	8.7t	8.7t		8.7t	8.7t	8.7t	8.7t		

m	18.8	18.8	18.8	18.8	18.8	18.8	18.8	18.8	18.8	18.8	18.8	18.8	18.8	18.8	18.8	22.6	22.6	22.6	22.6	22.6	26.3	26.3	26.3	26.3	26.3	m
°	5	15	30	45	60	5	15	30	45	60	5	15	30	45	60	5	15	30	45	60	5	15	30	45	60	°
m 3.0																										3.0
3.5																										3.5
4.0																										4.0
4.5																										4.5
5.0																										5.0
6.0	2.9					3.2					3.3					2.5										6.0
7.0	2.9					3.2					3.3					2.5					3.3					7.0
8.0	2.9					3.2					3.3					2.5					3.3					8.0
9.0	2.9	2.9				3.2	3.2				3.3	3.3				2.5					3.3					9.0
10.0	2.9	2.9				3.2	3.2				3.3	3.3				2.5	2.5				3.3	3.3				10.0
11.0	2.9	2.9				3.2	3.2				3.3	3.2				2.5	2.5				3.3	3.3				11.0
12.0	2.9	2.9				3.2	3.0				3.3	3.0				2.5	2.5				3.3	3.2				12.0
14.0	2.9	2.8	2.3			3.2	2.8	2.3			3.2	2.8	2.3			2.5	2.5	2.3			3.3	2.9	2.4			14.0
16.0	2.9	2.5	2.2	1.9		2.9	2.6	2.2	1.9		3.0	2.6	2.2	1.9		2.5	2.5	2.2			3.2	2.7	2.2			16.0
18.0	2.7	2.4	2.1	1.8		2.7	2.4	2.1	1.8		2.7	2.4	2.1	1.8		2.5	2.4	2.1	1.8		3.0	2.5	2.1	1.9		18.0
20.0	2.5	2.2	1.9	1.7		2.5	2.2	1.9	1.7		2.5	2.2	2.0	1.7		2.5	2.3	1.9	1.7		2.8	2.4	2.0	1.8		20.0
22.0	2.3	2.1	1.9	1.6		2.3	2.1	1.9	1.6		2.4	2.1	1.9	1.6		2.4	2.1	1.9	1.7		2.6	2.3	1.9	1.7		22.0
24.0	2.2	2.0	1.8	1.6		2.2	2.0	1.8	1.6		2.2	2.0	1.8	1.6		2.3	2.0	1.8	1.6		2.4	2.1	1.9	1.6		24.0
26.0	2.1	1.9	1.7			2.1	1.9	1.7			2.1	1.9	1.7			2.1	1.9	1.7	1.5		2.3	2.0	1.8	1.6		26.0
28.0	1.9	1.8	1.6			2.0	1.8	1.6			2.0	1.8	1.6			2.0	1.8	1.7			2.2	1.9	1.7	1.5		28.0
30.0	1.9	1.7				1.9	1.7				1.9	1.7				1.9	1.8	1.6			2.1	1.9	1.7			30.0
32.0	1.7	1.6				1.7	1.6				1.7	1.6				1.8	1.7				2.0	1.8	1.6			32.0
34.0	1.6					1.6					1.6					1.8	1.6				1.8	1.7	1.6			34.0
36.0																1.7					1.3	1.5				36.0
38.0																					0.9	1.1				38.0
40.0																										40.0
42.0																										42.0
44.0																										44.0
46.0																										46.0
48.0																										48.0
50.0																										50.0
52.0																										52.0
54.0																										54.0
56.0																										56.0
58.0																										58.0
60.0																										60.0
64.0																										64.0
% 1	0	0	0	0		0	0	0	0		0	0	0	0		0	0	0	0		92	92	92	92		1
% 2	0	0	0	0		0	0	0	0		46	46	46	46		0	0	0	0		92	92	92	92		2
% 3	0	0	0	0		46	46	46	46		46	46	46	46		0	0	0	0		0	0	0	0		3
% 4	46	46	46	46		46	46	46	46		0	0	0	0		0	0	0	0		0	0	0	0		4
% 5	46	46	46	46		0	0	0	0		0	0	0	0		46	46	46	46		0	0	0	0		5
% 6	0	0	0	0		0	0	0	0		0	0	0	0		92	92	92	92		0	0	0	0		6
ID	58	58	58	58		88	88	88	88		113	113	113	113		20	20	20	20		134	134	134	134		ID
[DEG]	21~84.7	32~84.7	49~84.7	63~84.7		21~84.7	32~84.7	49~84.7	63~84.7		21~84.7	32~84.7	49~84.7	63~84.7		28~84.7	37~84.7	51~84.7	63~84.7		31~84.7	34~84.7	47~84.7	62~84.7		[DEG]
	1	1	1	1		1	1	1	1		1	1	1	1		1	1	1	1		1	1	1	1		
	8.7t	8.7t	8.7t	8.7t		8.7t	8.7t	8.7t	8.7t		8.7t	8.7t	8.7t	8.7t		8.7t	8.7t	8.7t	8.7t		8.7t	8.7t	8.7t	8.7t		

FLJ	1.6m + 17.4m	18.7 t	8.0m x 6.2m	360 °	JPN

m	30.0	30.0	30.0	30.0	30.0	30.0	30.0	30.0	30.0	30.0	33.7	33.7	33.7	33.7	33.7	37.4	37.4	37.4	37.4	37.4	37.4	37.4	37.4	37.4	37.4	m
°	5	15	30	45	60	5	15	30	45	60	5	15	30	45	60	5	15	30	45	60	5	15	30	45	60	°
3.0																										3.0
3.5																										3.5
4.0																										4.0
4.5																										4.5
5.0																										5.0
6.0																										6.0
7.0																										7.0
8.0	2.3					3.2					3.1															8.0
9.0	2.3					3.2					3.1					2.4					2.5					9.0
10.0	2.3					3.2					3.1					2.4					2.5					10.0
11.0	2.3	2.3				3.2	3.2				3.1					2.4					2.5					11.0
12.0	2.3	2.3				3.2	3.2				3.1	3.1				2.4	2.4				2.5					12.0
14.0	2.3	2.3				3.2	2.9				3.1	3.0				2.4	2.4				2.5	2.5				14.0
16.0	2.3	2.3	2.2			3.2	2.8	2.3			3.1	2.8	2.3			2.4	2.4	2.2			2.5	2.5				16.0
18.0	2.3	2.3	2.1			3.1	2.6	2.2	1.9		3.1	2.6	2.2			2.4	2.4	2.2			2.5	2.5	2.1			18.0
20.0	2.3	2.3	2.0	1.8		2.9	2.4	2.1	1.8	1.5	2.9	2.5	2.1	1.8		2.4	2.4	2.1	1.8		2.5	2.4	2.0	1.8		20.0
22.0	2.3	2.2	1.9	1.7		2.7	2.3	2.0	1.7	1.5	2.7	2.3	2.0	1.8		2.4	2.4	2.0	1.8	1.5	2.5	2.2	1.9	1.7	1.5	22.0
24.0	2.3	2.1	1.8	1.7		2.5	2.2	1.9	1.7		2.6	2.2	1.9	1.7		2.4	2.2	1.9	1.7	1.5	2.5	2.1	1.8	1.7	1.5	24.0
26.0	2.3	2.0	1.8	1.6		2.4	2.1	1.8	1.6		2.4	2.1	1.8	1.6		2.4	2.2	1.8	1.7		2.4	2.1	1.8	1.6		26.0
28.0	2.2	1.9	1.7	1.6		2.3	2.0	1.8	1.6		2.3	2.0	1.8	1.6		2.4	2.1	1.8	1.6		2.2	2.0	1.7	1.6		28.0
30.0	2.1	1.8	1.6	1.5		2.2	1.9	1.7	1.5		2.2	1.9	1.7	1.5		2.3	2.0	1.7	1.6		2.1	1.9	1.7	1.5		30.0
32.0	2.0	1.8	1.6			2.1	1.8	1.6			2.0	1.9	1.7	1.5		2.0	1.9	1.7	1.5		2.1	1.8	1.6	1.5		32.0
34.0	1.9	1.7	1.6			1.6	1.8	1.6			1.5	1.8	1.6			1.6	1.8	1.6	1.5		2.0	1.8	1.6	1.5		34.0
36.0		1.7	1.5			1.2	1.5	1.6			1.1	1.4	1.6			1.1	1.4	1.6			1.9	1.7	1.5			36.0
38.0		1.6					1.1					1.0	1.3				1.0	1.3			1.8	1.7	1.5			38.0
40.0		1.6																0.9			1.8	1.6	1.5			40.0
42.0		1.5																			1.7	1.6	1.4			42.0
44.0																						1.5				44.0
46.0																						1.3				46.0
48.0																						1.0				48.0
50.0																										50.0
52.0																										52.0
54.0																										54.0
56.0																										56.0
58.0																										58.0
60.0																										60.0
64.0																										64.0
1	0	0	0	0		92	92	92	92	92	92	92	92	92		92	92	92	92	92	0	0	0	0	0	1
2	0	0	0	0		92	92	92	92	92	92	92	92	92		92	92	92	92	92	0	0	0	0	0	2
3	0	0	0	0		46	46	46	46	46	92	92	92	92		92	92	92	92	92	46	46	46	46	46	3
4	46	46	46	46		0	0	0	0	0	0	0	0	0		46	46	46	46	46	92	92	92	92	92	4
5	92	92	92	92		0	0	0	0	0	0	0	0	0		0	0	0	0	0	92	92	92	92	92	5
6	92	92	92	92		0	0	0	0	0	0	0	0	0		0	0	0	0	0	92	92	92	92	92	6
ID	22	22	22	22		116	116	116	116	116	110	110	110	110		93	93	93	93	93	24	24	24	24	24	ID
[DEG]	48~84.7	33~84.7	49~84.7	63~84.7		43~84.7	42~84.7	49~84.7	62~84.7	77~84.7	48~84.7	47~84.7	50~84.7	62~84.7		52~84.7	51~84.7	51~84.7	62~84.7	77~84.7	44~84.7	34~84.7	48~84.7	63~84.7	78~84.7	[DEG]
	1	1	1	1		1	1	1	1	1	1	1	1	1		1	1	1	1	1	1	1	1	1	1	
	8.7t	8.7t	8.7t	8.7t		8.7t	8.7t	8.7t	8.7t	8.7t	8.7t	8.7t	8.7t	8.7t		8.7t	8.7t	8.7t	8.7t	8.7t	8.7t	8.7t	8.7t	8.7t	8.7t	

m	41.2	41.2	41.2	41.2	41.2	44.9	44.9	44.9	44.9	44.9	44.9	44.9	44.9	44.9	44.9	48.6	48.6	48.6	48.6	48.6	48.6	48.6	48.6	48.6	48.6	m
°	5	15	30	45	60	5	15	30	45	60	5	15	30	45	60	5	15	30	45	60	5	15	30	45	60	°
3.0																										3.0
3.5																										3.5
4.0																										4.0
4.5																										4.5
5.0																										5.0
6.0																										6.0
7.0																										7.0
8.0																										8.0
9.0																										9.0
10.0	2.7										2.4															10.0
11.0	2.7					1.9					2.4					2.0					2.2					11.0
12.0	2.7					1.9					2.4					2.0					2.2					12.0
14.0	2.7	2.7				1.9	1.9				2.4	2.4				2.0	2.0				2.2	2.2				14.0
16.0	2.7	2.7				1.9	1.9				2.4	2.4				2.0	2.0				2.2	2.2				16.0
18.0	2.7	2.6	2.1			1.9	1.9	1.9			2.4	2.4	2.1			2.0	2.0				2.2	2.2				18.0
20.0	2.7	2.5	2.1	1.8		1.9	1.9	1.9			2.4	2.4	2.0			2.0	2.0	2.0			2.2	2.2	2.0			20.0
22.0	2.7	2.4	2.0	1.8	1.5	1.9	1.9	1.9	1.7		2.4	2.4	2.0	1.7		2.0	2.0	1.9	1.7		2.2	2.2	1.9	1.7		22.0
24.0	2.6	2.3	1.9	1.7	1.5	1.9	1.9	1.8	1.7	1.5	2.4	2.2	1.9	1.7	1.5	2.0	2.0	1.9	1.7	1.5	2.2	2.2	1.9	1.7	1.5	24.0
26.0	2.5	2.2	1.8	1.7		1.9	1.9	1.8	1.6	1.5	2.4	2.2	1.8	1.7	1.5	2.0	2.0	1.8	1.6	1.5	2.2	2.1	1.8	1.6	1.5	26.0
28.0	2.4	2.1	1.8	1.6		1.9	1.9	1.7	1.6		2.4	2.1	1.8	1.6		2.0	2.0	1.7	1.6		2.2	2.1	1.8	1.6		28.0
30.0	2.3	2.0	1.7	1.6		1.9	1.9	1.7	1.5		2.3	2.0	1.7	1.6		2.0	2.0	1.7	1.6		2.2	2.0	1.7	1.6		30.0
32.0	2.0	1.9	1.7	1.6		1.9	1.9	1.6	1.5		2.1	1.9	1.7	1.5		2.0	1.9	1.6	1.5		2.2	1.9	1.7	1.5		32.0
34.0	1.6	1.9	1.6	1.5		1.9	1.8	1.6	1.5		1.6	1.9	1.6	1.5		2.0	1.8	1.6	1.5		1.7	1.9	1.6	1.5		34.0
36.0	1.1	1.4	1.6	1.5		1.9	1.7	1.5	1.5			1.5	1.6	1.5		1.7	1.8	1.6	1.5			1.6	1.6	1.5		36.0
38.0			1.4			1.9	1.7	1.5					1.5			1.3	1.6	1.5	1.4				1.5	1.4		38.0
40.0						1.6	1.6	1.5									1.2	1.5								40.0
42.0						1.3	1.5	1.4										1.2								42.0
44.0						1.0	1.2	1.4																		44.0
46.0							0.9	1.1																		46.0
48.0																										48.0
50.0																										50.0
52.0																										52.0
54.0																										54.0
56.0																										56.0
58.0																										58.0
60.0																										60.0
64.0																										64.0
1	92	92	92	92	92	0	0	0	0	0	92	92	92	92	92	46	46	46	46	46	92	92	92	92	92	1
2	92	92	92	92	92	46	46	46	46	46	92	92	92	92	92	92	92	92	92	92	92	92	92	92	92	2
3	92	92	92	92	92	92	92	92	92	92	92	92	92	92	92	92	92	92	92	92	92	92	92	92	92	3
4	92	92	92	92	92	92	92	92	92	92	92	92	92	92	92	92	92	92	92	92	92	92	92	92	92	4
5	0	0	0	0	0	92	92	92	92	92	46	46	46	46	46	92	92	92	92	92	92	92	92	92	92	5
6	0	0	0	0	0	92	92	92	92	92	0	0	0	0	0	46	46	46	46	46	0	0	0	0	0	6
ID	83	83	83	83	83	26	26	26	26	26	65	65	65	65	65	38	38	38	38	38	49	49	49	49	49	ID
[DEG]	55~84.7	58~84.7	58~84.7	62~84.7	79~84.7	49~84.7	48~84.7	51~84.7	65~84.7	78~84.7	60~84.7	60~84.7	61~84.7	65~84.7	78~84.7	58~84.7	59~84.7	59~84.7	65~84.7	79~84.7	63~84.7	63~84.7	64~84.7	65~84.7	79~84.7	[DEG]
	1	1	1	1	1	1	1	1	1	1	1	1	1	1	1	1	1	1	1	1	1	1	1	1	1	
	8.7t	8.7t	8.7t	8.7t	8.7t	8.7t	8.7t	8.7t	8.7t	8.7t	8.7t	8.7t	8.7t	8.7t	8.7t	8.7t	8.7t	8.7t	8.7t	8.7t	8.7t	8.7t	8.7t	8.7t	8.7t	

フルオートラフィングジブ

FLJ	1.6m + 17.4m	18.7 t	8.0m x 6.2m	360 °	JPN

m	52.3	52.3	52.3	52.3	52.3	52.3	52.3	52.3	52.3	52.3	56.0	56.0	56.0	56.0	56.0	60.0	60.0	60.0	60.0	60.0						m
°	5	15	30	45	60	5	15	30	45	60	5	15	30	45	60	5	15	30	45	60						°
3.0																										3.0
3.5																										3.5
4.0																										4.0
4.5																										4.5
5.0																										5.0
6.0																										6.0
7.0																										7.0
8.0																										8.0
9.0																										9.0
10.0																										10.0
11.0																										11.0
12.0						2.0																				12.0
14.0	1.8					2.0					1.8															14.0
16.0	1.8	1.8				2.0	2.0				1.8	1.8				1.0										16.0
18.0	1.8	1.8				2.0	2.0				1.8	1.8				1.0	1.0									18.0
20.0	1.8	1.8	1.8			2.0	2.0	2.0			1.8	1.8				1.0	1.0									20.0
22.0	1.8	1.8	1.8			2.0	2.0	1.9			1.8	1.8	1.8			1.0	1.0	1.0								22.0
24.0	1.8	1.8	1.8	1.6		2.0	2.0	1.9	1.7		1.8	1.8	1.8	1.6		1.0	1.0	1.0								24.0
26.0	1.8	1.8	1.8	1.6	1.5	2.0	2.0	1.8	1.6	1.5	1.8	1.8	1.8	1.6	1.5	1.0	1.0	1.0	1.0							26.0
28.0	1.8	1.8	1.7	1.6	1.4	2.0	2.0	1.7	1.6	1.4	1.8	1.8	1.7	1.6	1.4	1.0	1.0	1.0	1.0	1.0						28.0
30.0	1.8	1.8	1.7	1.5		2.0	2.0	1.7	1.5		1.8	1.8	1.7	1.5		1.0	1.0	1.0	1.0	1.0						30.0
32.0	1.8	1.8	1.6	1.5		2.0	1.9	1.6	1.5		1.8	1.8	1.6	1.5		1.0	1.0	1.0	1.0							32.0
34.0	1.8	1.8	1.6	1.5		1.8	1.8	1.6	1.5		1.8	1.8	1.6	1.5			1.0	1.0	1.0							34.0
36.0	1.8	1.8	1.5	1.4			1.7	1.6	1.5			1.8	1.5	1.4				1.0	1.0							36.0
38.0	1.4	1.7	1.5	1.4				1.5	1.4				1.5	1.4				1.0	1.0							38.0
40.0		1.3	1.5	1.4					1.4					1.4												40.0
42.0			1.3																							42.0
44.0																										44.0
46.0																										46.0
48.0																										48.0
50.0																										50.0
52.0																										52.0
54.0																										54.0
56.0																										56.0
58.0																										58.0
60.0																										60.0
64.0																										64.0
1	46	46	46	46	46	92	92	92	92	92	92	92	92	92	92	100	100	100	100	100						1
2	92	92	92	92	92	92	92	92	92	92	92	92	92	92	92	100	100	100	100	100						2
3	92	92	92	92	92	92	92	92	92	92	92	92	92	92	92	100	100	100	100	100						3
4	92	92	92	92	92	92	92	92	92	92	92	92	92	92	92	100	100	100	100	100						4
5	92	92	92	92	92	92	92	92	92	92	92	92	92	92	92	100	100	100	100	100						5
6	92	92	92	92	92	46	46	46	46	46	92	92	92	92	92	100	100	100	100	100						6
ID	28	28	28	28	28	39	39	39	39	39	29	29	29	29	29	19	19	19	19	19						ID
[DEG]	61~84.7	61~84.7	62~84.7	65~84.7	78~84.7	65~84.7	65~84.7	66~84.7	65~84.7	78~84.7	67~84.7	67~84.7	68~84.7	68~84.7	79~84.7	69~84.7	70~84.7	69~84.7	71~84.7	78~84.7						[DEG]
	1	1	1	1	1	1	1	1	1	1	1	1	1	1	1	1	1	1	1	1						
	8.7t	8.7t	8.7t	8.7t	8.7t	8.7t	8.7t	8.7t	8.7t	8.7t	8.7t	8.7t	8.7t	8.7t	8.7t	8.7t	8.7t	8.7t	8.7t	8.7t						

FLJ	1.6m + 7.4m	18.7 t	8.0m x 5.0m	360 °	JPN

m	11.4	11.4	11.4	11.4	11.4	15.1	15.1	15.1	15.1	15.1	15.1	15.1	15.1	15.1	15.1	15.1	15.1	15.1	15.1	15.1	18.8	18.8	18.8	18.8	18.8	m
°	5	15	30	45	60	5	15	30	45	60	5	15	30	45	60	5	15	30	45	60	5	15	30	45	60	°
3.0	7.3					7.3					7.3					7.3					7.3					3.0
3.5	7.3					7.3					7.3					7.3					7.3					3.5
4.0	7.3	7.3				7.3	7.3				7.3	7.3				7.3	7.3				7.3					4.0
4.5	7.3	7.3				7.3	7.3				7.3	7.3				7.3	7.3				7.3					4.5
5.0	7.3	7.3	7.3			7.3	7.3				7.3	7.3				7.3	7.3				7.3	7.3				5.0
6.0	7.3	7.3	7.3			7.3	7.3	7.3			7.3	7.3	7.3			7.3	7.3	7.3			7.3	7.3	7.3			6.0
7.0	7.3	7.3	7.3	6.5	5.0	7.3	7.3	7.3	6.7		7.3	7.3	7.3	6.7		7.3	7.3	7.3	6.7		7.3	7.3	7.3			7.0
8.0	7.3	7.3	7.3	6.3	4.9	7.3	7.3	7.3	6.5	5.0	7.3	7.3	7.3	6.5	5.0	7.3	7.3	7.3	6.5	5.0	7.3	7.3	7.3	6.6	5.0	8.0
9.0	7.3	7.3	7.2	6.0		7.3	7.3	7.3	6.3	4.9	7.3	7.3	7.3	6.3	4.9	7.3	7.3	7.3	6.3	4.9	7.3	7.3	7.3	6.4	4.9	9.0
10.0	7.3	7.3	6.9	5.9		7.3	7.3	7.3	6.1		7.3	7.3	7.3	6.1		7.3	7.3	7.3	6.1		7.3	7.3	7.3	6.3	4.9	10.0
11.0	7.3	7.3	6.6	5.7		7.3	7.3	7.0	5.9		7.3	7.3	7.0	5.9		7.3	7.3	7.0	5.9		7.3	7.3	7.3	6.1		11.0
12.0	7.3	7.0	6.3			7.3	7.3	6.8	5.8		7.3	7.3	6.8	5.8		7.3	7.3	6.8	5.8		7.3	7.3	7.2	6.0		12.0
14.0	6.4	6.2	5.9			7.3	7.1	6.3			7.3	7.1	6.3			7.3	7.1	6.3			7.3	7.3	6.7	5.7		14.0
16.0	5.7	5.7				6.8	6.4	5.9			6.8	6.4	5.9			6.8	6.4	5.9			7.3	7.1	6.3			16.0
18.0						6.0	5.9				6.0	5.9				6.0	5.9				7.0	6.6	6.0			18.0
20.0						5.5					5.5					5.2					6.1	6.1				20.0
22.0																					5.0	5.1				22.0
24.0																					4.2					24.0
26.0																										26.0
28.0																										28.0
30.0																										30.0
32.0																										32.0
34.0																										34.0
36.0																										36.0
38.0																										38.0
40.0																										40.0
42.0																										42.0
44.0																										44.0
46.0																										46.0
48.0																										48.0
50.0																										50.0
52.0																										52.0
54.0																										54.0
56.0																										56.0
58.0																										58.0
60.0																										60.0
64.0																										64.0
1	0	0	0	0	0	0	0	0	0	0	0	0	0	0	0	0	0	0	0	0	0	0	0	0	0	1
2	0	0	0	0	0	0	0	0	0	0	0	0	0	0	0	46	46	46	46	46	0	0	0	0	0	2
3	0	0	0	0	0	0	0	0	0	0	46	46	46	46	46	0	0	0	0	0	0	0	0	0	0	3
4	0	0	0	0	0	46	46	46	46	46	0	0	0	0	0	0	0	0	0	0	0	0	0	0	0	4
5	0	0	0	0	0	0	0	0	0	0	0	0	0	0	0	0	0	0	0	0	46	46	46	46	46	5
6	0	0	0	0	0	0	0	0	0	0	0	0	0	0	0	0	0	0	0	0	46	46	46	46	46	6
ID	1	1	1	1	1	76	76	76	76	76	105	105	105	105	105	131	131	131	131	131	30	30	30	30	30	ID
[DEG]	0~84.7	0~84.7	0~84.7	0~84.7	0~84.7	24~84.7	37~84.7	48~84.7	64~84.7	75~84.7	24~84.7	37~84.7	48~84.7	64~84.7	75~84.7	24~84.7	37~84.7	48~84.7	64~84.7	75~84.7	21~84.7	33~84.7	50~84.7	63~84.7	75~84.7	[DEG]
	1	1	1	1	1	1	1	1	1	1	1	1	1	1	1	1	1	1	1	1	1	1	1	1	1	
	8.7t	8.7t	8.7t	8.7t	8.7t	8.7t	8.7t	8.7t	8.7t	8.7t	8.7t	8.7t	8.7t	8.7t	8.7t	8.7t	8.7t	8.7t	8.7t	8.7t	8.7t	8.7t	8.7t	8.7t	8.7t	

FLJ	1.6m + 7.4m	18.7 t	8.0m x 5.0m	360 °	JPN

m	18.8	18.8	18.8	18.8	18.8	18.8	18.8	18.8	18.8	18.8	18.8	18.8	18.8	18.8	18.8	22.6	22.6	22.6	22.6	22.6	26.3	26.3	26.3	26.3	26.3	m
°	5	15	30	45	60	5	15	30	45	60	5	15	30	45	60	5	15	30	45	60	5	15	30	45	60	°
3.0	7.3					7.3					7.3															3.0
3.5	7.3					7.3					7.3															3.5
4.0	7.3					7.3	7.3				7.3	7.3				7.3										4.0
4.5	7.3					7.3	7.3				7.3	7.3				7.3										4.5
5.0	7.3	7.3				7.3	7.3				7.3	7.3				7.3	7.3				7.3					5.0
6.0	7.3	7.3	7.3			7.3	7.3	7.3			7.3	7.3	7.3			7.3	7.3				7.3	7.3				6.0
7.0	7.3	7.3	7.3	6.9		7.3	7.3	7.3	6.9		7.3	7.3	7.3	6.9		7.3	7.3	7.3			7.3	7.3				7.0
8.0	7.3	7.3	7.3	6.6	5.0	7.3	7.3	7.3	6.6	5.0	7.3	7.3	7.3	6.6	5.0	7.3	7.3	7.3	6.8		7.3	7.3	7.3			8.0
9.0	7.3	7.3	7.3	6.4	4.9	7.3	7.3	7.3	6.4	4.9	7.3	7.3	7.3	6.4	4.9	7.3	7.3	7.3	6.6	5.0	7.3	7.3	7.3	6.7	5.0	9.0
10.0	7.3	7.3	7.3	6.3	4.9	7.3	7.3	7.3	6.3	4.9	7.3	7.3	7.3	6.3	4.9	7.3	7.3	7.3	6.4	4.9	7.3	7.3	7.3	6.5	4.9	10.0
11.0	7.3	7.3	7.3	6.1		7.3	7.3	7.3	6.1		7.3	7.3	7.3	6.1		7.3	7.3	7.3	6.3	4.8	7.3	7.3	7.3	6.4	4.9	11.0
12.0	7.3	7.3	7.2	6.0		7.3	7.3	7.2	6.0		7.3	7.3	7.2	6.0		7.3	7.3	7.3	6.1		7.3	7.3	7.3	6.3	4.8	12.0
14.0	7.3	7.3	6.7	5.7		7.3	7.3	6.7	5.7		7.3	7.3	6.7	5.7		7.2	6.9	6.5	5.9		7.3	7.3	7.3	6.0		14.0
16.0	7.3	7.1	6.3			7.3	7.1	6.3			7.3	7.1	6.3			6.4	6.1	5.9	5.7		6.6	7.1	7.0	5.8		16.0
18.0	7.0	6.6	6.0			6.8	6.6	6.0			6.4	6.6	6.0			5.7	5.5	5.3			4.9	5.3	5.7	5.7		18.0
20.0	5.8	5.9				5.4	5.6				5.0	5.2				5.1	5.0	4.9			3.6	3.9	4.3			20.0
22.0	4.7	4.8				4.4	4.5				4.0	4.1				4.6	4.5	4.5			2.6	2.8	3.1			22.0
24.0	3.9					3.5					3.1					4.2	4.1				1.8	2.0	2.2			24.0
26.0																3.6	3.6				1.1	1.2				26.0
28.0																										28.0
30.0																										30.0
32.0																										32.0
34.0																										34.0
36.0																										36.0
38.0																										38.0
40.0																										40.0
42.0																										42.0
44.0																										44.0
46.0																										46.0
48.0																										48.0
50.0																										50.0
52.0																										52.0
54.0																										54.0
56.0																										56.0
58.0																										58.0
60.0																										60.0
64.0																										64.0
1	0	0	0	0	0	0	0	0	0	0	0	0	0	0	0	0	0	0	0	0	92	92	92	92	92	1
2	0	0	0	0	0	0	0	0	0	0	46	46	46	46	46	0	0	0	0	0	92	92	92	92	92	2
3	0	0	0	0	0	46	46	46	46	46	46	46	46	46	46	0	0	0	0	0	0	0	0	0	0	3
4	46	46	46	46	46	46	46	46	46	46	0	0	0	0	0	0	0	0	0	0	0	0	0	0	0	4
5	46	46	46	46	46	0	0	0	0	0	0	0	0	0	0	46	46	46	46	46	0	0	0	0	0	5
6	0	0	0	0	0	0	0	0	0	0	0	0	0	0	0	92	92	92	92	92	0	0	0	0	0	6
ID	58	58	58	58	58	88	88	88	88	88	113	113	113	113	113	20	20	20	20	20	134	134	134	134	134	ID
[DEG]	21~84.7	33~84.7	50~84.7	63~84.7	75~84.7	21~84.7	33~84.7	50~84.7	63~84.7	75~84.7	21~84.7	33~84.7	50~84.7	63~84.7	75~84.7	29~84.7	30~84.7	46~84.7	63~84.7	76~84.7	39~84.7	40~84.7	47~84.7	63~84.7	76~84.7	[DEG]
	1	1	1	1	1	1	1	1	1	1	1	1	1	1	1	1	1	1	1	1	1	1	1	1	1	
	8.7t	8.7t	8.7t	8.7t	8.7t	8.7t	8.7t	8.7t	8.7t	8.7t	8.7t	8.7t	8.7t	8.7t	8.7t	8.7t	8.7t	8.7t	8.7t	8.7t	8.7t	8.7t	8.7t	8.7t	8.7t	

m	30.0	30.0	30.0	30.0	30.0	30.0	30.0	30.0	30.0	30.0	33.7	33.7	33.7	33.7	33.7	37.4	37.4	37.4	37.4	37.4	37.4	37.4	37.4	37.4	37.4	m
°	5	15	30	45	60	5	15	30	45	60	5	15	30	45	60	5	15	30	45	60	5	15	30	45	60	°
3.0																										3.0
3.5																										3.5
4.0																										4.0
4.5																										4.5
5.0	7.3					7.3																				5.0
6.0	7.3	7.3				7.3	7.3				7.3															6.0
7.0	7.3	7.3				7.3	7.3				7.3	7.3				7.1					7.3					7.0
8.0	7.3	7.3	7.3			7.3	7.3	7.3			7.3	7.3				7.1	7.1				7.3	7.3				8.0
9.0	7.3	7.3	7.3			7.3	7.3	7.3	6.8		7.3	7.3	7.3			7.1	7.1				7.3	7.3				9.0
10.0	7.3	7.3	7.3	6.6	5.0	7.3	7.3	7.3	6.6	5.0	7.3	7.3	7.3	6.7		7.1	7.1	7.1			7.3	7.3	7.3			10.0
11.0	7.3	7.3	7.3	6.5	4.9	7.3	7.3	7.3	6.5	4.9	7.3	7.3	7.3	6.6	4.9	7.1	7.1	7.1	6.7	5.0	7.3	7.3	7.2	6.7		11.0
12.0	7.3	7.3	7.1	6.4	4.9	7.3	7.3	7.3	6.4	4.9	7.3	7.3	7.3	6.5	4.9	7.1	7.1	7.1	6.6	4.9	7.3	7.3	6.9	6.4	4.9	12.0
14.0	6.8	6.6	6.3	6.1		7.3	7.3	7.3	6.1		7.3	7.3	7.3	6.2	4.8	7.1	7.1	7.1	6.3	4.8	6.9	6.6	6.2	5.9	4.8	14.0
16.0	6.0	5.8	5.6	5.5		6.6	7.1	7.2	5.9		6.6	7.1	7.3	6.0		6.8	7.1	7.1	6.1		6.1	5.9	5.7	5.5		16.0
18.0	5.3	5.2	5.1	5.0		4.9	5.3	5.8	5.8		4.9	5.3	5.8	5.9		5.1	5.4	5.9	6.0		5.5	5.4	5.2	5.0		18.0
20.0	4.8	4.7	4.6	4.5		3.6	3.9	4.3	4.6		3.6	4.0	4.4	4.7		3.7	4.1	4.5	4.8		5.0	4.9	4.7	4.6		20.0
22.0	4.3	4.3	4.2			2.6	2.9	3.2			2.6	2.9	3.2	3.5		2.7	3.0	3.4	3.6		4.6	4.5	4.3	4.3		22.0
24.0	3.9	3.9	3.8			1.8	2.0	2.2			1.8	2.0	2.3			1.9	2.1	2.4	2.6		3.9	4.1	4.0	4.0		24.0
26.0	3.5	3.5	3.5			1.1	1.2	1.4				1.3	1.5					1.6			3.2	3.3	3.5			26.0
28.0	2.8	2.9																			2.6	2.7	2.8			28.0
30.0	2.3	2.4																			2.0	2.2	2.3			30.0
32.0	1.9	1.9																			1.6	1.7	1.8			32.0
34.0	1.5																				1.2	1.3				34.0
36.0																					0.9	0.9				36.0
38.0																										38.0
40.0																										40.0
42.0																										42.0
44.0																										44.0
46.0																										46.0
48.0																										48.0
50.0																										50.0
52.0																										52.0
54.0																										54.0
56.0																										56.0
58.0																										58.0
60.0																										60.0
64.0																										64.0
1	0	0	0	0	0	92	92	92	92	92	92	92	92	92	92	92	92	92	92	92	0	0	0	0	0	1
2	0	0	0	0	0	92	92	92	92	92	92	92	92	92	92	92	92	92	92	92	0	0	0	0	0	2
3	0	0	0	0	0	46	46	46	46	46	92	92	92	92	92	92	92	92	92	92	46	46	46	46	46	3
4	46	46	46	46	46	0	0	0	0	0	0	0	0	0	0	46	46	46	46	46	92	92	92	92	92	4
5	92	92	92	92	92	0	0	0	0	0	0	0	0	0	0	0	0	0	0	0	92	92	92	92	92	5
6	92	92	92	92	92	0	0	0	0	0	0	0	0	0	0	0	0	0	0	0	92	92	92	92	92	6
ID	22	22	22	22	22	116	116	116	116	116	110	110	110	110	110	93	93	93	93	93	24	24	24	24	24	ID
[DEG]	24~84.7	32~84.7	50~84.7	63~84.7	78~84.7	46~84.7	47~84.7	49~84.7	62~84.7	78~84.7	54~84.7	52~84.7	54~84.7	62~84.7	76~84.7	58~84.7	59~84.7	58~84.7	62~84.7	78~84.7	37~84.7	38~84.7	48~84.7	63~84.7	78~84.7	[DEG]
	1	1	1	1	1	1	1	1	1	1	1	1	1	1	1	1	1	1	1	1	1	1	1	1	1	
	8.7t	8.7t	8.7t	8.7t	8.7t	8.7t	8.7t	8.7t	8.7t	8.7t	8.7t	8.7t	8.7t	8.7t	8.7t	8.7t	8.7t	8.7t	8.7t	8.7t	8.7t	8.7t	8.7t	8.7t	8.7t	

フルオートラフィングジブ

FLJ	1.6m + 7.4m	18.7 t	8.0m x 5.0m	360 °	JPN

m	41.2	41.2	41.2	41.2	41.2	44.9	44.9	44.9	44.9	44.9	44.9	44.9	44.9	44.9	44.9	48.6	48.6	48.6	48.6	48.6	48.6	48.6	48.6	48.6	48.6	m
°	5	15	30	45	60	5	15	30	45	60	5	15	30	45	60	5	15	30	45	60	5	15	30	45	60	°
3.0																										3.0
3.5																										3.5
4.0																										4.0
4.5																										4.5
5.0																										5.0
6.0																										6.0
7.0	7.3																									7.0
8.0	7.3										6.5															8.0
9.0	7.3	7.3				4.6					6.5					4.8					5.4					9.0
10.0	7.3	7.3	7.3			4.6	4.6				6.5	6.5				4.8					5.4					10.0
11.0	7.3	7.3	7.3			4.6	4.6				6.5	6.5	6.5			4.8	4.8				5.4	5.4				11.0
12.0	7.3	7.3	7.3	6.6	4.9	4.6	4.6	4.6			6.5	6.5	6.5			4.8	4.8	4.8			5.4	5.4	5.4			12.0
14.0	7.3	7.3	7.3	6.4	4.9	4.6	4.6	4.6	4.6	4.6	6.5	6.5	6.5	6.5	4.9	4.8	4.8	4.8	4.8	4.8	5.4	5.4	5.4	5.4	4.9	14.0
16.0	6.9	7.3	7.3	6.2		4.6	4.6	4.6	4.6	4.6	6.5	6.5	6.5	6.3	4.8	4.8	4.8	4.8	4.8	4.8	5.4	5.4	5.4	5.4	4.8	16.0
18.0	5.2	5.5	6.1	6.1		4.6	4.6	4.6	4.6		5.3	5.7	6.2	6.1		4.8	4.8	4.8	4.8		5.4	5.4	5.4	5.4		18.0
20.0	3.8	4.2	4.6	4.9		4.6	4.6	4.6	4.6		4.0	4.3	4.8	5.1		4.7	4.8	4.8	4.8		4.2	4.5	4.9	5.3		20.0
22.0	2.8	3.1	3.5	3.7		4.4	4.5	4.3	4.2		3.0	3.3	3.6	3.9		3.7	3.9	4.3	4.5		3.1	3.4	3.8	4.1		22.0
24.0	2.0	2.2	2.5	2.8		3.5	3.7	3.9	4.0		2.1	2.4	2.7	2.9		2.8	3.0	3.3	3.6		2.3	2.5	2.8	3.1		24.0
26.0			1.7	1.9		2.8	2.9	3.2	3.3				1.9	2.1		2.1	2.3	2.6	2.7				2.1	2.3		26.0
28.0						2.2	2.3	2.5	2.6								1.7	1.9	2.1							28.0
30.0						1.6	1.8	1.9											1.5							30.0
32.0						1.2	1.3	1.5																		32.0
34.0							0.9	1.0																		34.0
36.0																										36.0
38.0																										38.0
40.0																										40.0
42.0																										42.0
44.0																										44.0
46.0																										46.0
48.0																										48.0
50.0																										50.0
52.0																										52.0
54.0																										54.0
56.0																										56.0
58.0																										58.0
60.0																										60.0
64.0																										64.0
1	92	92	92	92	92	0	0	0	0	0	92	92	92	92	92	46	46	46	46	46	92	92	92	92	92	1
2	92	92	92	92	92	46	46	46	46	46	92	92	92	92	92	92	92	92	92	92	92	92	92	92	92	2
3	92	92	92	92	92	92	92	92	92	92	92	92	92	92	92	92	92	92	92	92	92	92	92	92	92	3
4	92	92	92	92	92	92	92	92	92	92	92	92	92	92	92	92	92	92	92	92	92	92	92	92	92	4
5	0	0	0	0	0	92	92	92	92	92	46	46	46	46	46	92	92	92	92	92	92	92	92	92	92	5
6	0	0	0	0	0	92	92	92	92	92	0	0	0	0	0	46	46	46	46	46	0	0	0	0	0	6
ID	83	83	83	83	83	26	26	26	26	26	65	65	65	65	65	38	38	38	38	38	49	49	49	49	49	ID
[DEG]	61~84.7	62~84.7	61~84.7	62~84.7	79~84.7	54~84.7	52~84.7	53~84.7	63~84.7	78~84.7	64~84.7	65~84.7	64~84.7	65~84.7	78~84.7	64~84.7	62~84.7	64~84.7	62~84.7	79~84.7	66~84.7	67~84.7	66~84.7	67~84.7	79~84.7	[DEG]
	1	1	1	1	1	1	1	1	1	1	1	1	1	1	1	1	1	1	1	1	1	1	1	1	1	
	8.7t	8.7t	8.7t	8.7t	8.7t	8.7t	8.7t	8.7t	8.7t	8.7t	8.7t	8.7t	8.7t	8.7t	8.7t	8.7t	8.7t	8.7t	8.7t	8.7t	8.7t	8.7t	8.7t	8.7t	8.7t	

m	52.3	52.3	52.3	52.3	52.3	52.3	52.3	52.3	52.3	52.3	56.0	56.0	56.0	56.0	56.0	60.0	60.0	60.0	60.0	60.0						m
°	5	15	30	45	60	5	15	30	45	60	5	15	30	45	60	5	15	30	45	60						°
3.0																										3.0
3.5																										3.5
4.0																										4.0
4.5																										4.5
5.0																										5.0
6.0																										6.0
7.0																										7.0
8.0																										8.0
9.0																										9.0
10.0	3.9					4.4																				10.0
11.0	3.9					4.4					3.7															11.0
12.0	3.9	3.9				4.4	4.4				3.7															12.0
14.0	3.9	3.9	3.9			4.4	4.4	4.4			3.7	3.7	3.7			3.2	3.2									14.0
16.0	3.9	3.9	3.9	3.9	3.9	4.4	4.4	4.4	4.4	4.4	3.7	3.7	3.7	3.7	3.7	3.2	3.2	3.2	3.2							16.0
18.0	3.9	3.9	3.9	3.9	3.9	4.4	4.4	4.4	4.4	4.4	3.7	3.7	3.7	3.7	3.7	3.2	3.2	3.2	3.2	3.2						18.0
20.0	3.9	3.9	3.9	3.9		4.4	4.4	4.4	4.4		3.7	3.7	3.7	3.7		3.2	3.2	3.2	3.2	3.2						20.0
22.0	3.8	3.9	3.9	3.9		3.3	3.6	4.0	4.2		3.5	3.7	3.7	3.7		3.2	3.2	3.2	3.2							22.0
24.0	3.0	3.2	3.5	3.7		2.4	2.7	3.0	3.3		2.6	2.9	3.2	3.4			2.8	3.1	3.2							24.0
26.0	2.2	2.4	2.7	2.9				2.2	2.5				2.4	2.6					2.6							26.0
28.0		1.8	2.1	2.2																						28.0
30.0				1.6																						30.0
32.0																										32.0
34.0																										34.0
36.0																										36.0
38.0																										38.0
40.0																										40.0
42.0																										42.0
44.0																										44.0
46.0																										46.0
48.0																										48.0
50.0																										50.0
52.0																										52.0
54.0																										54.0
56.0																										56.0
58.0																										58.0
60.0																										60.0
64.0																										64.0
1	46	46	46	46	46	92	92	92	92	92	92	92	92	92	92	100	100	100	100	100						1
2	92	92	92	92	92	92	92	92	92	92	92	92	92	92	92	100	100	100	100	100						2
3	92	92	92	92	92	92	92	92	92	92	92	92	92	92	92	100	100	100	100	100						3
4	92	92	92	92	92	92	92	92	92	92	92	92	92	92	92	100	100	100	100	100						4
5	92	92	92	92	92	92	92	92	92	92	92	92	92	92	92	100	100	100	100	100						5
6	92	92	92	92	92	46	46	46	46	46	92	92	92	92	92	100	100	100	100	100						6
ID	28	28	28	28	28	39	39	39	39	39	29	29	29	29	29	19	19	19	19	19						ID
[DEG]	66~84.7	65~84.7	66~84.7	65~84.7	78~84.7	68~84.7	69~84.7	68~84.7	69~84.7	78~84.7	70~84.7	71~84.7	70~84.7	71~84.7	79~84.7	73~84.7	73~84.7	74~84.7	73~84.7	79~84.7						[DEG]
	1	1	1	1	1	1	1	1	1	1	1	1	1	1	1	1	1	1	1	1						
	8.7t	8.7t	8.7t	8.7t	8.7t	8.7t	8.7t	8.7t	8.7t	8.7t	8.7t	8.7t	8.7t	8.7t	8.7t	8.7t	8.7t	8.7t	8.7t	8.7t						

FLJ	1.6m + 12.4m	18.7 t	8.0m x 5.0m	360 °	JPN

m	11.4	11.4	11.4	11.4	11.4	15.1	15.1	15.1	15.1	15.1	15.1	15.1	15.1	15.1	15.1	15.1	15.1	15.1	15.1	15.1	18.8	18.8	18.8	18.8	18.8	m
°	5	15	30	45	60	5	15	30	45	60	5	15	30	45	60	5	15	30	45	60	5	15	30	45	60	°
3.0	4.3																									3.0
3.5	4.3																									3.5
4.0	4.3					4.3					4.3					4.3					4.3					4.0
4.5	4.3					4.3					4.3					4.3					4.3					4.5
5.0	4.3					4.3					4.3					4.3					4.3					5.0
6.0	4.3	4.3				4.3	4.3				4.3	4.3				4.3	4.3				4.3					6.0
7.0	4.3	4.3				4.3	4.3				4.3	4.3				4.3	4.3				4.3	4.3				7.0
8.0	4.3	4.3				4.3	4.3				4.3	4.3				4.3	4.3				4.3	4.3				8.0
9.0	4.3	4.3	4.3			4.3	4.3	4.3			4.3	4.3	4.3			4.3	4.3	4.3			4.3	4.3				9.0
10.0	4.3	4.3	4.1			4.3	4.3	4.3			4.3	4.3	4.3			4.3	4.3	4.3			4.3	4.3	4.3			10.0
11.0	4.3	4.3	3.9	3.2		4.3	4.3	4.1	3.3		4.3	4.3	4.1	3.3		4.3	4.3	4.1	3.3		4.3	4.3	4.1			11.0
12.0	4.3	4.3	3.7	3.1		4.3	4.3	3.9	3.2		4.3	4.3	3.9	3.2		4.3	4.3	3.9	3.2		4.3	4.3	3.9	3.3		12.0
14.0	4.3	4.0	3.3	2.9		4.3	4.3	3.5	3.0		4.3	4.3	3.5	3.0		4.3	4.3	3.5	3.0		4.3	4.3	3.7	3.1		14.0
16.0	3.8	3.5	3.0	2.7		4.3	3.9	3.3	2.8		4.3	3.9	3.3	2.8		4.3	3.9	3.3	2.8		4.3	4.1	3.4	2.9		16.0
18.0	3.4	3.2	2.8			3.9	3.6	3.0	2.7		3.9	3.6	3.0	2.7		3.9	3.6	3.0	2.7		4.3	3.8	3.2	2.8		18.0
20.0	3.0	2.9				3.5	3.3	2.9			3.5	3.3	2.9			3.5	3.3	2.9			4.0	3.5	3.0	2.7		20.0
22.0	2.7					3.2	3.0				3.2	3.0				3.2	3.0				3.6	3.3	2.9			22.0
24.0						2.9	2.8				2.9	2.8				2.9	2.8				3.3	3.1	2.8			24.0
26.0																					3.0	2.9				26.0
28.0																					2.8					28.0
30.0																										30.0
32.0																										32.0
34.0																										34.0
36.0																										36.0
38.0																										38.0
40.0																										40.0
42.0																										42.0
44.0																										44.0
46.0																										46.0
48.0																										48.0
50.0																										50.0
52.0																										52.0
54.0																										54.0
56.0																										56.0
58.0																										58.0
60.0																										60.0
64.0																										64.0
1	0	0	0	0		0	0	0	0		0	0	0	0		0	0	0	0		0	0	0	0		1
2	0	0	0	0		0	0	0	0		0	0	0	0		46	46	46	46		0	0	0	0		2
3	0	0	0	0		0	0	0	0		46	46	46	46		0	0	0	0		0	0	0	0		3
4	0	0	0	0		46	46	46	46		0	0	0	0		0	0	0	0		0	0	0	0		4
5	0	0	0	0		0	0	0	0		0	0	0	0		0	0	0	0		46	46	46	46		5
6	0	0	0	0		0	0	0	0		0	0	0	0		0	0	0	0		46	46	46	46		6
ID	1	1	1	1		76	76	76	76		105	105	105	105		131	131	131	131		30	30	30	30		ID
[DEG]	0~84.7	0~84.7	0~84.7	0~84.7		29~84.7	32~84.7	51~84.7	60~84.7		29~84.7	31~84.7	51~84.7	60~84.7		29~84.7	31~84.7	51~84.7	60~84.7		26~84.7	37~84.7	46~84.7	60~84.7		[DEG]
	1	1	1	1		1	1	1	1		1	1	1	1		1	1	1	1		1	1	1	1		
	8.7t	8.7t	8.7t	8.7t		8.7t	8.7t	8.7t	8.7t		8.7t	8.7t	8.7t	8.7t		8.7t	8.7t	8.7t	8.7t		8.7t	8.7t	8.7t	8.7t		

m	18.8	18.8	18.8	18.8	18.8	18.8	18.8	18.8	18.8	18.8	18.8	18.8	18.8	18.8	18.8	22.6	22.6	22.6	22.6	22.6	26.3	26.3	26.3	26.3	26.3	m
°	5	15	30	45	60	5	15	30	45	60	5	15	30	45	60	5	15	30	45	60	5	15	30	45	60	°
3.0																										3.0
3.5																										3.5
4.0	4.3					4.3					4.3															4.0
4.5	4.3					4.3					4.3															4.5
5.0	4.3					4.3					4.3					4.3										5.0
6.0	4.3					4.3					4.3					4.3					4.3					6.0
7.0	4.3	4.3				4.3	4.3				4.3	4.3				4.3	4.3				4.3					7.0
8.0	4.3	4.3				4.3	4.3				4.3	4.3				4.3	4.3				4.3	4.3				8.0
9.0	4.3	4.3				4.3	4.3				4.3	4.3				4.3	4.3				4.3	4.3				9.0
10.0	4.3	4.3	4.3			4.3	4.3	4.3			4.3	4.3	4.3			4.3	4.3				4.3	4.3				10.0
11.0	4.3	4.3	4.1			4.3	4.3	4.2			4.3	4.3	4.2			4.3	4.3	4.1			4.3	4.3	4.3			11.0
12.0	4.3	4.3	4.0	3.3		4.3	4.3	4.0	3.3		4.3	4.3	4.0	3.3		4.3	4.3	4.0			4.3	4.3	4.2			12.0
14.0	4.3	4.3	3.7	3.1		4.3	4.3	3.7	3.1		4.3	4.3	3.7	3.1		4.3	4.3	3.7	3.1		4.3	4.3	3.9	3.2	2.7	14.0
16.0	4.3	4.1	3.5	2.9		4.3	4.2	3.5	2.9		4.3	4.2	3.5	2.9		4.3	4.2	3.5	3.0		4.3	4.3	3.7	3.0	2.6	16.0
18.0	4.3	3.8	3.2	2.8		4.3	3.8	3.2	2.8		4.3	3.9	3.2	2.8		4.3	3.9	3.3	2.9		4.3	4.2	3.5	2.9		18.0
20.0	4.0	3.6	3.0	2.7		4.0	3.6	3.0	2.7		4.0	3.6	3.0	2.7		4.2	3.7	3.1	2.8		4.3	4.0	3.3	2.8		20.0
22.0	3.6	3.3	2.9			3.6	3.3	2.9			3.6	3.3	2.9			3.9	3.4	3.0			3.6	3.7	3.2	2.7		22.0
24.0	3.3	3.1	2.8			3.3	3.1	2.8			3.3	3.1	2.8			3.6	3.3	2.9			2.7	3.1	3.0			24.0
26.0	3.0	2.9				3.0	2.9				3.0	2.9				3.4	3.1	2.8			2.0	2.3	2.7			26.0
28.0	2.8					2.8					2.7					3.2	3.0				1.4	1.6	1.9			28.0
30.0																2.9	2.8				0.9	1.1				30.0
32.0																2.6										32.0
34.0																										34.0
36.0																										36.0
38.0																										38.0
40.0																										40.0
42.0																										42.0
44.0																										44.0
46.0																										46.0
48.0																										48.0
50.0																										50.0
52.0																										52.0
54.0																										54.0
56.0																										56.0
58.0																										58.0
60.0																										60.0
64.0																										64.0
1	0	0	0	0		0	0	0	0		0	0	0	0		0	0	0	0		92	92	92	92	92	1
2	0	0	0	0		0	0	0	0		46	46	46	46		0	0	0	0		92	92	92	92	92	2
3	0	0	0	0		46	46	46	46		46	46	46	46		0	0	0	0		0	0	0	0	0	3
4	46	46	46	46		46	46	46	46		0	0	0	0		0	0	0	0		0	0	0	0	0	4
5	46	46	46	46		0	0	0	0		0	0	0	0		46	46	46	46		0	0	0	0	0	5
6	0	0	0	0		0	0	0	0		0	0	0	0		92	92	92	92		0	0	0	0	0	6
ID	58	58	58	58		88	88	88	88		113	113	113	113		20	20	20	20		134	134	134	134	134	ID
[DEG]	26~84.7	37~84.7	46~84.7	60~84.7		26~84.7	37~84.7	46~84.7	60~84.7		26~84.7	37~84.7	46~84.7	60~84.7		24~84.7	34~84.7	49~84.7	65~84.7		39~84.7	42~84.7	50~84.7	64~84.7	77~84.7	[DEG]
	1	1	1	1		1	1	1	1		1	1	1	1		1	1	1	1		1	1	1	1	1	
	8.7t	8.7t	8.7t	8.7t		8.7t	8.7t	8.7t	8.7t		8.7t	8.7t	8.7t	8.7t		8.7t	8.7t	8.7t	8.7t		8.7t	8.7t	8.7t	8.7t	8.7t	

フルオートラフィングジブ

FLJ	1.6m + 12.4m	18.7 t	8.0m x 5.0m	360 °	JPN

m	30.0	30.0	30.0	30.0	30.0	30.0	30.0	30.0	30.0	30.0	33.7	33.7	33.7	33.7	33.7	37.4	37.4	37.4	37.4	37.4	37.4	37.4	37.4	37.4	37.4	m
°	5	15	30	45	60	5	15	30	45	60	5	15	30	45	60	5	15	30	45	60	5	15	30	45	60	°
3.0																										3.0
3.5																										3.5
4.0																										4.0
4.5																										4.5
5.0																										5.0
6.0	4.0					4.3																				6.0
7.0	4.0					4.3					4.3					4.1										7.0
8.0	4.0					4.3					4.3					4.1					4.3					8.0
9.0	4.0	4.0				4.3	4.3				4.3	4.3				4.1					4.3					9.0
10.0	4.0	4.0				4.3	4.3				4.3	4.3				4.1	4.1				4.3	4.3				10.0
11.0	4.0	4.0				4.3	4.3	4.3			4.3	4.3				4.1	4.1				4.3	4.3				11.0
12.0	4.0	4.0	4.0			4.3	4.3	4.2			4.3	4.3	4.2			4.1	4.1				4.3	4.3				12.0
14.0	4.0	4.0	3.7	3.2		4.3	4.3	3.9	3.2		4.3	4.3	3.9	3.3		4.1	4.1	3.9			4.3	4.3	3.7			14.0
16.0	4.0	4.0	3.5	3.1		4.3	4.3	3.7	3.1		4.3	4.3	3.7	3.2	2.6	4.1	4.1	3.7	3.2	2.6	4.3	4.3	3.5	3.1		16.0
18.0	4.0	4.0	3.4	3.0		4.3	4.3	3.5	3.0		4.3	4.3	3.6	3.0	2.6	4.1	4.1	3.6	3.1	2.6	4.3	4.1	3.4	3.0		18.0
20.0	4.0	3.8	3.2	2.9		4.3	4.1	3.4	2.9		4.3	4.1	3.4	2.9		4.1	4.1	3.4	3.0		4.3	3.9	3.2	2.9		20.0
22.0	4.0	3.6	3.1	2.8		3.5	3.8	3.2	2.8		3.4	3.9	3.3	2.8		3.5	3.9	3.3	2.9		4.2	3.7	3.1	2.8		22.0
24.0	3.7	3.4	3.0	2.7		2.6	3.0	3.1	2.7		2.6	3.0	3.1	2.8		2.6	3.0	3.2	2.8		3.9	3.5	3.0	2.7		24.0
26.0	3.4	3.3	2.9			1.9	2.2	2.7			1.9	2.2	2.7	2.7		1.9	2.3	2.7	2.7		3.6	3.4	2.9	2.7		26.0
28.0	3.1	3.1	2.8			1.3	1.6	1.9			1.2	1.6	1.9				1.6	2.0	2.3		3.1	3.2	2.8	2.6		28.0
30.0	2.8	2.8	2.7				1.0	1.3					1.3					1.4			2.5	2.7	2.7			30.0
32.0	2.4	2.5	2.5																		2.1	2.3	2.5			32.0
34.0	2.0	2.1																			1.7	1.8	2.0			34.0
36.0		1.7																			1.3	1.5	1.6			36.0
38.0																					1.0	1.1				38.0
40.0																										40.0
42.0																										42.0
44.0																										44.0
46.0																										46.0
48.0																										48.0
50.0																										50.0
52.0																										52.0
54.0																										54.0
56.0																										56.0
58.0																										58.0
60.0																										60.0
64.0																										64.0
1	0	0	0	0		92	92	92	92		92	92	92	92	92	92	92	92	92	92	0	0	0	0		1
2	0	0	0	0		92	92	92	92		92	92	92	92	92	92	92	92	92	92	0	0	0	0		2
3	0	0	0	0		46	46	46	46		92	92	92	92	92	92	92	92	92	92	46	46	46	46		3
4	46	46	46	46		0	0	0	0		0	0	0	0	0	46	46	46	46	46	92	92	92	92		4
5	92	92	92	92		0	0	0	0		0	0	0	0	0	0	0	0	0	0	92	92	92	92		5
6	92	92	92	92		0	0	0	0		0	0	0	0	0	0	0	0	0	0	92	92	92	92		6
ID	22	22	22	22		116	116	116	116		110	110	110	110	110	93	93	93	93	93	24	24	24	24		ID
[DEG]	38~84.7	35~84.7	47~84.7	64~84.7		49~84.7	48~84.7	51~84.7	64~84.7		54~84.7	56~84.7	55~84.7	64~84.7	77~84.7	60~84.7	59~84.7	59~84.7	64~84.7	79~84.7	42~84.7	44~84.7	50~84.7	64~84.7		[DEG]
	1	1	1	1		1	1	1	1		1	1	1	1	1	1	1	1	1	1	1	1	1	1		
	8.7t	8.7t	8.7t	8.7t		8.7t	8.7t	8.7t	8.7t		8.7t	8.7t	8.7t	8.7t	8.7t	8.7t	8.7t	8.7t	8.7t	8.7t	8.7t	8.7t	8.7t	8.7t		

m	41.2	41.2	41.2	41.2	41.2	44.9	44.9	44.9	44.9	44.9	44.9	44.9	44.9	44.9	44.9	48.6	48.6	48.6	48.6	48.6	48.6	48.6	48.6	48.6	48.6	m
°	5	15	30	45	60	5	15	30	45	60	5	15	30	45	60	5	15	30	45	60	5	15	30	45	60	°
3.0																										3.0
3.5																										3.5
4.0																										4.0
4.5																										4.5
5.0																										5.0
6.0																										6.0
7.0																										7.0
8.0	4.3																									8.0
9.0	4.3										4.0															9.0
10.0	4.3					3.0					4.0					3.2					3.6					10.0
11.0	4.3	4.3				3.0					4.0	4.0				3.2					3.6					11.0
12.0	4.3	4.3				3.0	3.0				4.0	4.0				3.2	3.2				3.6	3.6				12.0
14.0	4.3	4.3	3.9			3.0	3.0				4.0	4.0				3.2	3.2				3.6	3.6				14.0
16.0	4.3	4.3	3.7	3.2		3.0	3.0	3.0			4.0	4.0	3.7			3.2	3.2	3.2			3.6	3.6	3.6			16.0
18.0	4.3	4.3	3.5	3.1	2.6	3.0	3.0	3.0	2.9		4.0	4.0	3.5	3.0	2.6	3.2	3.2	3.2	3.0		3.6	3.6	3.5	3.0		18.0
20.0	4.3	4.1	3.4	3.0	2.6	3.0	3.0	3.0	2.9		4.0	4.0	3.4	2.9	2.6	3.2	3.2	3.2	2.9	2.6	3.6	3.6	3.3	2.9	2.6	20.0
22.0	3.5	4.0	3.3	2.9		3.0	3.0	3.0	2.8		3.6	3.9	3.2	2.9		3.2	3.2	3.2	2.8	2.5	3.6	3.6	3.2	2.8	2.5	22.0
24.0	2.7	3.1	3.2	2.8		3.0	3.0	3.0	2.7		2.8	3.2	3.1	2.8		3.2	3.2	3.1	2.7		2.9	3.3	3.1	2.8		24.0
26.0	1.9	2.3	2.8	2.7		3.0	3.0	2.9	2.6		2.0	2.4	2.9	2.7		2.6	3.0	3.0	2.7		2.1	2.5	3.0	2.7		26.0
28.0		1.7	2.1	2.4		2.6	2.9	2.8	2.6			1.8	2.2	2.5		2.0	2.3	2.7	2.6			1.9	2.3	2.6		28.0
30.0			1.5	1.7		2.1	2.4	2.7	2.5				1.6	1.9			1.8	2.1	2.4					2.0		30.0
32.0						1.7	1.9	2.1	2.3									1.6	1.8							32.0
34.0						1.3	1.5	1.7											1.3							34.0
36.0						0.9	1.1	1.3																		36.0
38.0								0.9																		38.0
40.0																										40.0
42.0																										42.0
44.0																										44.0
46.0																										46.0
48.0																										48.0
50.0																										50.0
52.0																										52.0
54.0																										54.0
56.0																										56.0
58.0																										58.0
60.0																										60.0
64.0																										64.0
1	92	92	92	92	92	0	0	0	0		92	92	92	92	92	46	46	46	46	46	92	92	92	92	92	1
2	92	92	92	92	92	46	46	46	46		92	92	92	92	92	92	92	92	92	92	92	92	92	92	92	2
3	92	92	92	92	92	92	92	92	92		92	92	92	92	92	92	92	92	92	92	92	92	92	92	92	3
4	92	92	92	92	92	92	92	92	92		92	92	92	92	92	92	92	92	92	92	92	92	92	92	92	4
5	0	0	0	0	0	92	92	92	92		46	46	46	46	46	92	92	92	92	92	92	92	92	92	92	5
6	0	0	0	0	0	92	92	92	92		0	0	0	0	0	46	46	46	46	46	0	0	0	0	0	6
ID	83	83	83	83	83	26	26	26	26		65	65	65	65	65	38	38	38	38	38	49	49	49	49	49	ID
[DEG]	63~84.7	62~84.7	62~84.7	64~84.7	78~84.7	53~84.7	55~84.7	54~84.7	64~84.7		65~84.7	65~84.7	65~84.7	66~84.7	79~84.7	65~84.7	65~84.7	65~84.7	63~84.7	78~84.7	67~84.7	67~84.7	69~84.7	68~84.7	78~84.7	[DEG]
	1	1	1	1	1	1	1	1	1		1	1	1	1	1	1	1	1	1	1	1	1	1	1	1	
	8.7t	8.7t	8.7t	8.7t	8.7t	8.7t	8.7t	8.7t	8.7t		8.7t	8.7t	8.7t	8.7t	8.7t	8.7t	8.7t	8.7t	8.7t	8.7t	8.7t	8.7t	8.7t	8.7t	8.7t	

FLJ	1.6m + 12.4m	18.7 t	8.0m x 5.0m	360 °	JPN

m	52.3	52.3	52.3	52.3	52.3	52.3	52.3	52.3	52.3	52.3	56.0	56.0	56.0	56.0	56.0	60.0	60.0	60.0	60.0	60.0	m
°	5	15	30	45	60	5	15	30	45	60	5	15	30	45	60	5	15	30	45	60	°
3.0																					3.0
3.5																					3.5
4.0																					4.0
4.5																					4.5
5.0																					5.0
6.0																					6.0
7.0																					7.0
8.0																					8.0
9.0																					9.0
10.0																					10.0
11.0	2.7					3.0															11.0
12.0	2.7					3.0					2.6										12.0
14.0	2.7	2.7				3.0	3.0				2.6	2.6				1.9					14.0
16.0	2.7	2.7	2.7			3.0	3.0	3.0			2.6	2.6				1.9	1.9				16.0
18.0	2.7	2.7	2.7			3.0	3.0	3.0			2.6	2.6	2.6			1.9	1.9	1.9			18.0
20.0	2.7	2.7	2.7	2.7	2.6	3.0	3.0	3.0	2.9	2.6	2.6	2.6	2.6	2.6		1.9	1.9	1.9	1.9		20.0
22.0	2.7	2.7	2.7	2.7	2.5	3.0	3.0	3.0	2.8	2.5	2.6	2.6	2.6	2.6	2.5	1.9	1.9	1.9	1.9	1.9	22.0
24.0	2.7	2.7	2.7	2.7		3.0	3.0	3.0	2.7		2.6	2.6	2.6	2.6	2.5	1.9	1.9	1.9	1.9	1.9	24.0
26.0	2.7	2.7	2.7	2.6		2.3	2.7	3.0	2.7		2.4	2.6	2.6	2.6			1.9	1.9	1.9		26.0
28.0	2.1	2.4	2.7	2.6			2.0	2.4	2.6			2.1	2.6	2.6				1.9	1.9		28.0
30.0		1.9	2.2	2.5				1.8	2.1				2.0	2.3					1.9		30.0
32.0			1.7	2.0																	32.0
34.0				1.5																	34.0
36.0																					36.0
38.0																					38.0
40.0																					40.0
42.0																					42.0
44.0																					44.0
46.0																					46.0
48.0																					48.0
50.0																					50.0
52.0																					52.0
54.0																					54.0
56.0																					56.0
58.0																					58.0
60.0																					60.0
64.0																					64.0
1	46	46	46	46	46	92	92	92	92	92	92	92	92	92	92	100	100	100	100	100	1
2	92	92	92	92	92	92	92	92	92	92	92	92	92	92	92	100	100	100	100	100	2
3	92	92	92	92	92	92	92	92	92	92	92	92	92	92	92	100	100	100	100	100	3
4	92	92	92	92	92	92	92	92	92	92	92	92	92	92	92	100	100	100	100	100	4
5	92	92	92	92	92	92	92	92	92	92	92	92	92	92	92	100	100	100	100	100	5
6	92	92	92	92	92	46	46	46	46	46	92	92	92	92	92	100	100	100	100	100	6
ID	28	28	28	28	28	39	39	39	39	39	29	29	29	29	29	19	19	19	19	19	ID
[DEG]	67~84.7	67~84.7	67~84.7	66~84.7	79~84.7	69~84.7	69~84.7	69~84.7	70~84.7	79~84.7	71~84.7	70~84.7	71~84.7	72~84.7	79~84.7	73~84.7	73~84.7	74~84.7	74~84.7	79~84.7	[DEG]
	1	1	1	1	1	1	1	1	1	1	1	1	1	1	1	1	1	1	1	1	
	8.7t	8.7t	8.7t	8.7t	8.7t	8.7t	8.7t	8.7t	8.7t	8.7t	8.7t	8.7t	8.7t	8.7t	8.7t	8.7t	8.7t	8.7t	8.7t	8.7t	

FLJ	1.6m + 17.4m	18.7 t	8.0m x 5.0m	360 °	JPN

m	11.4	11.4	11.4	11.4	11.4	15.1	15.1	15.1	15.1	15.1	15.1	15.1	15.1	15.1	15.1	15.1	15.1	15.1	15.1	15.1	18.8	18.8	18.8	18.8	18.8	m
°	5	15	30	45	60	5	15	30	45	60	5	15	30	45	60	5	15	30	45	60	5	15	30	45	60	°
3.0																										3.0
3.5																										3.5
4.0																										4.0
4.5	3.3																									4.5
5.0	3.3					3.1					3.3					3.3										5.0
6.0	3.3					3.1					3.3					3.3					2.7					6.0
7.0	3.3					3.1					3.3					3.3					2.7					7.0
8.0	3.3	3.3				3.1					3.3					3.3					2.7					8.0
9.0	3.3	3.3				3.1	3.1				3.3	3.3				3.3	3.3				2.7	2.7				9.0
10.0	3.3	3.2				3.1	3.1				3.3	3.3				3.3	3.3				2.7	2.7				10.0
11.0	3.3	3.0				3.1	3.1				3.3	3.1				3.3	3.1				2.7	2.7				11.0
12.0	3.2	2.9	2.5			3.1	2.9				3.3	2.9				3.3	3.0				2.7	2.7				12.0
14.0	2.9	2.6	2.3			3.1	2.7	2.3			3.1	2.7	2.3			3.1	2.7	2.3			2.7	2.7	2.3			14.0
16.0	2.6	2.4	2.1	1.8		2.8	2.5	2.2	1.9		2.8	2.5	2.2	1.9		2.8	2.5	2.2	1.9		2.7	2.5	2.2			16.0
18.0	2.4	2.2	1.9	1.7		2.6	2.3	2.0	1.8		2.6	2.3	2.0	1.8		2.6	2.3	2.0	1.8		2.7	2.4	2.0	1.8		18.0
20.0	2.2	2.0	1.8	1.6		2.4	2.1	1.9	1.7		2.4	2.1	1.9	1.7		2.4	2.1	1.9	1.7		2.5	2.2	1.9	1.7		20.0
22.0	2.0	1.9	1.7			2.2	2.0	1.8	1.6		2.2	2.0	1.8	1.6		2.2	2.0	1.8	1.6		2.3	2.1	1.8	1.6		22.0
24.0	1.8	1.7				2.1	1.9	1.7			2.1	1.9	1.7			2.1	1.9	1.7			2.2	2.0	1.8	1.6		24.0
26.0	1.7	1.6				1.9	1.8	1.6			1.9	1.8	1.6			1.9	1.8	1.6			2.0	1.9	1.7			26.0
28.0						1.8	1.6				1.8	1.6				1.8	1.6				1.9	1.8	1.6			28.0
30.0						1.6					1.6					1.6					1.9	1.7				30.0
32.0																					1.7	1.6				32.0
34.0																					1.6					34.0
36.0																										36.0
38.0																										38.0
40.0																										40.0
42.0																										42.0
44.0																										44.0
46.0																										46.0
48.0																										48.0
50.0																										50.0
52.0																										52.0
54.0																										54.0
56.0																										56.0
58.0																										58.0
60.0																										60.0
64.0																										64.0
1	0	0	0	0		0	0	0	0		0	0	0	0		0	0	0	0		0	0	0	0		1
2	0	0	0	0		0	0	0	0		0	0	0	0		46	46	46	46		0	0	0	0		2
3	0	0	0	0		0	0	0	0		46	46	46	46		0	0	0	0		0	0	0	0		3
4	0	0	0	0		46	46	46	46		0	0	0	0		0	0	0	0		0	0	0	0		4
5	0	0	0	0		0	0	0	0		0	0	0	0		0	0	0	0		46	46	46	46		5
6	0	0	0	0		0	0	0	0		0	0	0	0		0	0	0	0		46	46	46	46		6
ID	1	1	1	1		76	76	76	76		105	105	105	105		131	131	131	131		30	30	30	30		ID
[DEG]	0~84.7	0~84.7	0~84.7	0~84.7		23~84.7	36~84.7	47~84.7	63~84.7		23~84.7	36~84.7	47~84.7	63~84.7		23~84.7	36~84.7	47~84.7	63~84.7		21~84.7	33~84.7	49~84.7	63~84.7		[DEG]
	1	1	1	1		1	1	1	1		1	1	1	1		1	1	1	1		1	1	1	1		
	8.7t	8.7t	8.7t	8.7t		8.7t	8.7t	8.7t	8.7t		8.7t	8.7t	8.7t	8.7t		8.7t	8.7t	8.7t	8.7t		8.7t	8.7t	8.7t	8.7t		

フルオートラフィングジブ

FLJ	1.6m + 17.4m	18.7 t	8.0m x 5.0m	360 °	JPN

m	18.8	18.8	18.8	18.8	18.8	18.8	18.8	18.8	18.8	18.8	18.8	18.8	18.8	18.8	18.8	22.6	22.6	22.6	22.6	22.6	26.3	26.3	26.3	26.3	26.3	m
°	5	15	30	45	60	5	15	30	45	60	5	15	30	45	60	5	15	30	45	60	5	15	30	45	60	°
3.0																										3.0
3.5																										3.5
4.0																										4.0
4.5																										4.5
5.0																										5.0
6.0	2.9					3.2					3.3					2.5										6.0
7.0	2.9					3.2					3.3					2.5					3.3					7.0
8.0	2.9					3.2					3.3					2.5					3.3					8.0
9.0	2.9	2.9				3.2	3.2				3.3	3.3				2.5					3.3					9.0
10.0	2.9	2.9				3.2	3.2				3.3	3.3				2.5	2.5				3.3	3.3				10.0
11.0	2.9	2.9				3.2	3.2				3.3	3.2				2.5	2.5				3.3	3.3				11.0
12.0	2.9	2.9				3.2	3.0				3.3	3.0				2.5	2.5				3.3	3.2				12.0
14.0	2.9	2.8	2.3			3.2	2.8	2.3			3.2	2.8	2.3			2.5	2.5	2.3			3.3	2.9	2.4			14.0
16.0	2.9	2.5	2.2	1.9		2.9	2.6	2.2	1.9		3.0	2.6	2.2	1.9		2.5	2.5	2.2			3.2	2.7	2.2			16.0
18.0	2.7	2.4	2.1	1.8		2.7	2.4	2.1	1.8		2.7	2.4	2.1	1.8		2.5	2.4	2.1	1.8		3.0	2.5	2.1	1.9		18.0
20.0	2.5	2.2	1.9	1.7		2.5	2.2	1.9	1.7		2.5	2.2	2.0	1.7		2.5	2.3	1.9	1.7		2.8	2.4	2.0	1.8		20.0
22.0	2.3	2.1	1.9	1.6		2.3	2.1	1.9	1.6		2.4	2.1	1.9	1.6		2.4	2.1	1.9	1.7		2.6	2.3	1.9	1.7		22.0
24.0	2.2	2.0	1.8	1.6		2.2	2.0	1.8	1.6		2.2	2.0	1.8	1.6		2.3	2.0	1.8	1.6		2.4	2.1	1.9	1.6		24.0
26.0	2.1	1.9	1.7			2.1	1.9	1.7			2.1	1.9	1.7			2.1	1.9	1.7	1.5		2.3	2.0	1.8	1.6		26.0
28.0	1.9	1.8	1.6			2.0	1.8	1.6			2.0	1.8	1.6			2.0	1.8	1.7			2.1	1.9	1.7	1.5		28.0
30.0	1.9	1.7				1.9	1.7				1.9	1.7				1.9	1.8	1.6			1.6	1.9	1.7			30.0
32.0	1.7	1.6				1.7	1.6				1.7	1.6				1.8	1.7				1.1	1.4	1.6			32.0
34.0	1.6					1.6					1.6					1.8	1.6					1.0	1.2			34.0
36.0																1.7										36.0
38.0																										38.0
40.0																										40.0
42.0																										42.0
44.0																										44.0
46.0																										46.0
48.0																										48.0
50.0																										50.0
52.0																										52.0
54.0																										54.0
56.0																										56.0
58.0																										58.0
60.0																										60.0
64.0																										64.0
1	0	0	0	0		0	0	0	0		0	0	0	0		0	0	0	0		92	92	92	92		1
2	0	0	0	0		0	0	0	0		46	46	46	46		0	0	0	0		92	92	92	92		2
3	0	0	0	0		46	46	46	46		46	46	46	46		0	0	0	0		0	0	0	0		3
4	46	46	46	46		46	46	46	46		0	0	0	0		0	0	0	0		0	0	0	0		4
5	46	46	46	46		0	0	0	0		0	0	0	0		46	46	46	46		0	0	0	0		5
6	0	0	0	0		0	0	0	0		0	0	0	0		92	92	92	92		0	0	0	0		6
ID	58	58	58	58		88	88	88	88		113	113	113	113		20	20	20	20		134	134	134	134		ID
[DEG]	21~84.7	32~84.7	49~84.7	63~84.7		21~84.7	32~84.7	49~84.7	63~84.7		20~84.7	32~84.7	49~84.7	63~84.7		28~84.7	37~84.7	51~84.7	63~84.7		45~84.7	44~84.7	47~84.7	62~84.7		[DEG]
	1	1	1	1		1	1	1	1		1	1	1	1		1	1	1	1		1	1	1	1		
	8.7t	8.7t	8.7t	8.7t		8.7t	8.7t	8.7t	8.7t		8.7t	8.7t	8.7t	8.7t		8.7t	8.7t	8.7t	8.7t		8.7t	8.7t	8.7t	8.7t		

m	30.0	30.0	30.0	30.0	30.0	30.0	30.0	30.0	30.0	30.0	33.7	33.7	33.7	33.7	33.7	37.4	37.4	37.4	37.4	37.4	37.4	37.4	37.4	37.4	37.4	m
°	5	15	30	45	60	5	15	30	45	60	5	15	30	45	60	5	15	30	45	60	5	15	30	45	60	°
3.0																										3.0
3.5																										3.5
4.0																										4.0
4.5																										4.5
5.0																										5.0
6.0																										6.0
7.0																										7.0
8.0	2.3					3.2					3.1															8.0
9.0	2.3					3.2					3.1					2.4					2.5					9.0
10.0	2.3					3.2					3.1					2.4					2.5					10.0
11.0	2.3	2.3				3.2	3.2				3.1					2.4					2.5					11.0
12.0	2.3	2.3				3.2	3.2				3.1	3.1				2.4	2.4				2.5					12.0
14.0	2.3	2.3				3.2	2.9				3.1	3.0				2.4	2.4				2.5	2.5				14.0
16.0	2.3	2.3	2.2			3.2	2.8	2.3			3.1	2.8	2.3			2.4	2.4	2.2			2.5	2.5				16.0
18.0	2.3	2.3	2.1			3.1	2.6	2.2	1.9		3.1	2.6	2.2			2.4	2.4	2.2			2.5	2.5	2.1			18.0
20.0	2.3	2.3	2.0	1.8		2.9	2.4	2.1	1.8	1.5	2.9	2.5	2.1	1.8		2.4	2.4	2.1	1.8		2.5	2.4	2.0	1.8		20.0
22.0	2.3	2.2	1.9	1.7		2.7	2.3	2.0	1.7	1.5	2.7	2.3	2.0	1.8		2.4	2.4	2.0	1.8	1.5	2.5	2.2	1.9	1.7	1.5	22.0
24.0	2.3	2.1	1.8	1.7		2.5	2.2	1.9	1.7		2.6	2.2	1.9	1.7		2.4	2.2	1.9	1.7	1.5	2.5	2.1	1.8	1.7	1.5	24.0
26.0	2.3	2.0	1.8	1.6		2.4	2.1	1.8	1.6		2.4	2.1	1.8	1.6		2.4	2.2	1.8	1.7		2.4	2.1	1.8	1.6		26.0
28.0	2.2	1.9	1.7	1.6		2.0	2.0	1.8	1.6		1.9	2.0	1.8	1.6		1.9	2.1	1.8	1.6		2.2	2.0	1.7	1.6		28.0
30.0	2.1	1.8	1.6	1.5		1.5	1.8	1.7	1.5		1.4	1.8	1.7	1.5		1.4	1.8	1.7	1.6		2.1	1.9	1.7	1.5		30.0
32.0	2.0	1.8	1.6			1.0	1.3	1.6				1.3	1.7	1.5			1.3	1.7	1.5		2.1	1.8	1.6	1.5		32.0
34.0	1.9	1.7	1.6				0.9	1.2					1.2					1.3	1.5		2.0	1.8	1.6	1.5		34.0
36.0		1.7	1.5																		1.7	1.7	1.5			36.0
38.0		1.6																			1.4	1.6	1.5			38.0
40.0		1.6																			1.1	1.3	1.5			40.0
42.0		1.3																			0.9	1.0	1.2			42.0
44.0																										44.0
46.0																										46.0
48.0																										48.0
50.0																										50.0
52.0																										52.0
54.0																										54.0
56.0																										56.0
58.0																										58.0
60.0																										60.0
64.0																										64.0
1	0	0	0	0		92	92	92	92	92	92	92	92	92		92	92	92	92	92	0	0	0	0	0	1
2	0	0	0	0		92	92	92	92	92	92	92	92	92		92	92	92	92	92	0	0	0	0	0	2
3	0	0	0	0		46	46	46	46	46	92	92	92	92		92	92	92	92	92	46	46	46	46	46	3
4	46	46	46	46		0	0	0	0	0	0	0	0	0		46	46	46	46	46	92	92	92	92	92	4
5	92	92	92	92		0	0	0	0	0	0	0	0	0		0	0	0	0	0	92	92	92	92	92	5
6	92	92	92	92		0	0	0	0	0	0	0	0	0		0	0	0	0	0	92	92	92	92	92	6
ID	22	22	22	22		116	116	116	116	116	110	110	110	110		93	93	93	93	93	24	24	24	24	24	ID
[DEG]	48~84.7	33~84.7	49~84.7	63~84.7		49~84.7	49~84.7	53~84.7	62~84.7	77~84.7	56~84.7	56~84.7	57~84.7	62~84.7		59~84.7	60~84.7	60~84.7	62~84.7	77~84.7	43~84.7	46~84.7	48~84.7	63~84.7	78~84.7	[DEG]
	1	1	1	1		1	1	1	1	1	1	1	1	1		1	1	1	1	1	1	1	1	1	1	
	8.7t	8.7t	8.7t	8.7t		8.7t	8.7t	8.7t	8.7t	8.7t	8.7t	8.7t	8.7t	8.7t		8.7t	8.7t	8.7t	8.7t	8.7t	8.7t	8.7t	8.7t	8.7t	8.7t	

FLJ	1.6m + 17.4m	18.7 t	8.0m x 5.0m	360 °	JPN

m	41.2	41.2	41.2	41.2	41.2	44.9	44.9	44.9	44.9	44.9	44.9	44.9	44.9	44.9	44.9	48.6	48.6	48.6	48.6	48.6	48.6	48.6	48.6	48.6	48.6	m
°	5	15	30	45	60	5	15	30	45	60	5	15	30	45	60	5	15	30	45	60	5	15	30	45	60	°
3.0																										3.0
3.5																										3.5
4.0																										4.0
4.5																										4.5
5.0																										5.0
6.0																										6.0
7.0																										7.0
8.0																										8.0
9.0																										9.0
10.0	2.7										2.4															10.0
11.0	2.7					1.9					2.4					2.0					2.2					11.0
12.0	2.7					1.9					2.4					2.0					2.2					12.0
14.0	2.7	2.7				1.9	1.9				2.4	2.4				2.0	2.0				2.2	2.2				14.0
16.0	2.7	2.7				1.9	1.9				2.4	2.4				2.0	2.0				2.2	2.2				16.0
18.0	2.7	2.6	2.1			1.9	1.9	1.9			2.4	2.4	2.1			2.0	2.0				2.2	2.2				18.0
20.0	2.7	2.5	2.1	1.8		1.9	1.9	1.9			2.4	2.4	2.0			2.0	2.0	2.0			2.2	2.2	2.0			20.0
22.0	2.7	2.4	2.0	1.8	1.5	1.9	1.9	1.9	1.7		2.4	2.4	2.0	1.7		2.0	2.0	1.9	1.7		2.2	2.2	1.9	1.7		22.0
24.0	2.6	2.3	1.9	1.7	1.5	1.9	1.9	1.8	1.7	1.5	2.4	2.2	1.9	1.7	1.5	2.0	2.0	1.9	1.7	1.5	2.2	2.2	1.9	1.7	1.5	24.0
26.0	2.5	2.2	1.8	1.7		1.9	1.9	1.8	1.6	1.5	2.4	2.2	1.8	1.7	1.5	2.0	2.0	1.8	1.6	1.5	2.2	2.1	1.8	1.6	1.5	26.0
28.0	1.9	2.1	1.8	1.6		1.9	1.9	1.7	1.6		2.0	2.1	1.8	1.6		2.0	2.0	1.7	1.6		2.0	2.1	1.8	1.6		28.0
30.0		1.8	1.7	1.6		1.9	1.9	1.7	1.5			1.9	1.7	1.6		1.9	2.0	1.7	1.6			1.9	1.7	1.6		30.0
32.0			1.7	1.6		1.9	1.9	1.6	1.5				1.7	1.5		1.5	1.8	1.6	1.5				1.7	1.5		32.0
34.0				1.5		1.7	1.8	1.6	1.5					1.5			1.4	1.6	1.5					1.5		34.0
36.0						1.3	1.6	1.5	1.5									1.4	1.5							36.0
38.0						1.0	1.2	1.5											1.3							38.0
40.0							0.9	1.2																		40.0
42.0								0.9																		42.0
44.0																										44.0
46.0																										46.0
48.0																										48.0
50.0																										50.0
52.0																										52.0
54.0																										54.0
56.0																										56.0
58.0																										58.0
60.0																										60.0
64.0																										64.0
% 1	92	92	92	92	92	0	0	0	0	0	92	92	92	92	92	46	46	46	46	46	92	92	92	92	92	1
% 2	92	92	92	92	92	46	46	46	46	46	92	92	92	92	92	92	92	92	92	92	92	92	92	92	92	2
% 3	92	92	92	92	92	92	92	92	92	92	92	92	92	92	92	92	92	92	92	92	92	92	92	92	92	3
% 4	92	92	92	92	92	92	92	92	92	92	92	92	92	92	92	92	92	92	92	92	92	92	92	92	92	4
% 5	0	0	0	0	0	92	92	92	92	92	46	46	46	46	46	92	92	92	92	92	92	92	92	92	92	5
% 6	0	0	0	0	0	92	92	92	92	92	0	0	0	0	0	46	46	46	46	46	0	0	0	0	0	6
ID	83	83	83	83	83	26	26	26	26	26	65	65	65	65	65	38	38	38	38	38	49	49	49	49	49	ID
[DEG]	64~84.7	65~84.7	66~84.7	65~84.7	79~84.7	56~84.7	56~84.7	56~84.7	65~84.7	78~84.7	66~84.7	67~84.7	68~84.7	67~84.7	78~84.7	64~84.7	65~84.7	65~84.7	65~84.7	79~84.7	68~84.7	69~84.7	70~84.7	70~84.7	79~84.7	[DEG]
	1	1	1	1	1	1	1	1	1	1	1	1	1	1	1	1	1	1	1	1	1	1	1	1	1	
	8.7t	8.7t	8.7t	8.7t	8.7t	8.7t	8.7t	8.7t	8.7t	8.7t	8.7t	8.7t	8.7t	8.7t	8.7t	8.7t	8.7t	8.7t	8.7t	8.7t	8.7t	8.7t	8.7t	8.7t	8.7t	

m	52.3	52.3	52.3	52.3	52.3	52.3	52.3	52.3	52.3	52.3	56.0	56.0	56.0	56.0	56.0	60.0	60.0	60.0	60.0	60.0						m
°	5	15	30	45	60	5	15	30	45	60	5	15	30	45	60	5	15	30	45	60						°
3.0																										3.0
3.5																										3.5
4.0																										4.0
4.5																										4.5
5.0																										5.0
6.0																										6.0
7.0																										7.0
8.0																										8.0
9.0																										9.0
10.0																										10.0
11.0																										11.0
12.0						2.0																				12.0
14.0	1.8					2.0					1.8															14.0
16.0	1.8	1.8				2.0	2.0				1.8	1.8				1.0										16.0
18.0	1.8	1.8				2.0	2.0				1.8	1.8				1.0	1.0									18.0
20.0	1.8	1.8	1.8			2.0	2.0	2.0			1.8	1.8				1.0	1.0									20.0
22.0	1.8	1.8	1.8			2.0	2.0	1.9			1.8	1.8	1.8			1.0	1.0	1.0								22.0
24.0	1.8	1.8	1.8	1.6		2.0	2.0	1.9	1.7		1.8	1.8	1.8	1.6		1.0	1.0	1.0								24.0
26.0	1.8	1.8	1.8	1.6	1.5	2.0	2.0	1.8	1.6	1.5	1.8	1.8	1.8	1.6	1.5	1.0	1.0	1.0	1.0							26.0
28.0	1.8	1.8	1.7	1.6	1.4	2.0	2.0	1.7	1.6	1.4	1.8	1.8	1.7	1.6	1.4		1.0	1.0	1.0	1.0						28.0
30.0	1.8	1.8	1.7	1.5			2.0	1.7	1.5			1.8	1.7	1.5				1.0	1.0	1.0						30.0
32.0	1.6	1.8	1.6	1.5				1.6	1.5				1.6	1.5					1.0							32.0
34.0		1.5	1.6	1.5					1.5					1.5												34.0
36.0			1.5	1.4																						36.0
38.0				1.4																						38.0
40.0																										40.0
42.0																										42.0
44.0																										44.0
46.0																										46.0
48.0																										48.0
50.0																										50.0
52.0																										52.0
54.0																										54.0
56.0																										56.0
58.0																										58.0
60.0																										60.0
64.0																										64.0
% 1	46	46	46	46	46	92	92	92	92	92	92	92	92	92	92	100	100	100	100	100						1
% 2	92	92	92	92	92	92	92	92	92	92	92	92	92	92	92	100	100	100	100	100						2
% 3	92	92	92	92	92	92	92	92	92	92	92	92	92	92	92	100	100	100	100	100						3
% 4	92	92	92	92	92	92	92	92	92	92	92	92	92	92	92	100	100	100	100	100						4
% 5	92	92	92	92	92	92	92	92	92	92	92	92	92	92	92	100	100	100	100	100						5
% 6	92	92	92	92	92	46	46	46	46	46	92	92	92	92	92	100	100	100	100	100						6
ID	28	28	28	28	28	39	39	39	39	39	29	29	29	29	29	19	19	19	19	19						ID
[DEG]	66~84.7	67~84.7	68~84.7	67~84.7	78~84.7	70~84.7	70~84.7	71~84.7	71~84.7	78~84.7	71~84.7	72~84.7	73~84.7	73~84.7	79~84.7	73~84.7	74~84.7	75~84.7	76~84.7	78~84.7						[DEG]
	1	1	1	1	1	1	1	1	1	1	1	1	1	1	1	1	1	1	1	1						
	8.7t	8.7t	8.7t	8.7t	8.7t	8.7t	8.7t	8.7t	8.7t	8.7t	8.7t	8.7t	8.7t	8.7t	8.7t	8.7t	8.7t	8.7t	8.7t	8.7t						

フルオートラフィングジブ

FLJ	1.6m + 7.4m	15.3 t	8.0m x 7.5m	360 °	JPN

m	11.4	11.4	11.4	11.4	11.4	15.1	15.1	15.1	15.1	15.1	15.1	15.1	15.1	15.1	15.1	15.1	15.1	15.1	15.1	15.1	18.8	18.8	18.8	18.8	18.8	m
°	5	15	30	45	60	5	15	30	45	60	5	15	30	45	60	5	15	30	45	60	5	15	30	45	60	°
3.0	7.3					7.3					7.3					7.3					7.3					3.0
3.5	7.3					7.3					7.3					7.3					7.3					3.5
4.0	7.3	7.3				7.3	7.3				7.3	7.3				7.3	7.3				7.3					4.0
4.5	7.3	7.3				7.3	7.3				7.3	7.3				7.3	7.3				7.3					4.5
5.0	7.3	7.3	7.3			7.3	7.3				7.3	7.3				7.3	7.3				7.3	7.3				5.0
6.0	7.3	7.3	7.3			7.3	7.3	7.3			7.3	7.3	7.3			7.3	7.3	7.3			7.3	7.3	7.3			6.0
7.0	7.3	7.3	7.3	6.5	5.0	7.3	7.3	7.3	6.7		7.3	7.3	7.3	6.7		7.3	7.3	7.3	6.7		7.3	7.3	7.3			7.0
8.0	7.3	7.3	7.3	6.3	4.9	7.3	7.3	7.3	6.5	5.0	7.3	7.3	7.3	6.5	5.0	7.3	7.3	7.3	6.5	5.0	7.3	7.3	7.3	6.6	5.0	8.0
9.0	7.3	7.3	7.2	6.0		7.3	7.3	7.3	6.3	4.9	7.3	7.3	7.3	6.3	4.9	7.3	7.3	7.3	6.3	4.9	7.3	7.3	7.3	6.4	4.9	9.0
10.0	7.3	7.3	6.9	5.9		7.3	7.3	7.3	6.1		7.3	7.3	7.3	6.1		7.3	7.3	7.3	6.1		7.3	7.3	7.3	6.3	4.9	10.0
11.0	7.3	7.3	6.6	5.7		7.3	7.3	7.0	5.9		7.3	7.3	7.0	5.9		7.3	7.3	7.0	5.9		7.3	7.3	7.3	6.1		11.0
12.0	7.3	7.0	6.3			7.3	7.3	6.8	5.8		7.3	7.3	6.8	5.8		7.3	7.3	6.8	5.8		7.3	7.3	7.2	6.0		12.0
14.0	6.4	6.2	5.9			7.3	7.1	6.3			7.3	7.1	6.3			7.3	7.1	6.3			7.3	7.3	6.7	5.7		14.0
16.0	5.7	5.7				6.8	6.4	5.9			6.8	6.4	5.9			6.8	6.4	5.9			7.3	7.1	6.3			16.0
18.0						6.0	5.9				6.0	5.9				6.0	5.9				7.0	6.6	6.0			18.0
20.0						5.5					5.5					5.5					6.3	6.1				20.0
22.0																					5.8	5.7				22.0
24.0																					5.3					24.0
26.0																										26.0
28.0																										28.0
30.0																										30.0
32.0																										32.0
34.0																										34.0
36.0																										36.0
38.0																										38.0
40.0																										40.0
42.0																										42.0
44.0																										44.0
46.0																										46.0
48.0																										48.0
50.0																										50.0
52.0																										52.0
54.0																										54.0
56.0																										56.0
58.0																										58.0
60.0																										60.0
64.0																										64.0
% 1	0	0	0	0	0	0	0	0	0	0	0	0	0	0	0	0	0	0	0	0	0	0	0	0	0	1
% 2	0	0	0	0	0	0	0	0	0	0	0	0	0	0	0	46	46	46	46	46	0	0	0	0	0	2
% 3	0	0	0	0	0	0	0	0	0	0	46	46	46	46	46	0	0	0	0	0	0	0	0	0	0	3
% 4	0	0	0	0	0	46	46	46	46	46	0	0	0	0	0	0	0	0	0	0	0	0	0	0	0	4
% 5	0	0	0	0	0	0	0	0	0	0	0	0	0	0	0	0	0	0	0	0	46	46	46	46	46	5
% 6	0	0	0	0	0	0	0	0	0	0	0	0	0	0	0	0	0	0	0	0	46	46	46	46	46	6
ID	1	1	1	1	1	76	76	76	76	76	105	105	105	105	105	131	131	131	131	131	30	30	30	30	30	ID
[DEG]	0~84.7	0~84.7	0~84.7	0~84.7	0~84.7	24~84.7	37~84.7	48~84.7	64~84.7	75~84.7	24~84.7	37~84.7	48~84.7	64~84.7	75~84.7	24~84.7	37~84.7	48~84.7	64~84.7	75~84.7	22~84.7	34~84.7	50~84.7	63~84.7	75~84.7	[DEG]
	1	1	1	1	1	1	1	1	1	1	1	1	1	1	1	1	1	1	1	1	1	1	1	1	1	
	8.7t	8.7t	8.7t	8.7t	8.7t	8.7t	8.7t	8.7t	8.7t	8.7t	8.7t	8.7t	8.7t	8.7t	8.7t	8.7t	8.7t	8.7t	8.7t	8.7t	8.7t	8.7t	8.7t	8.7t	8.7t	

m	18.8	18.8	18.8	18.8	18.8	18.8	18.8	18.8	18.8	18.8	18.8	18.8	18.8	18.8	18.8	22.6	22.6	22.6	22.6	22.6	26.3	26.3	26.3	26.3	26.3	m
°	5	15	30	45	60	5	15	30	45	60	5	15	30	45	60	5	15	30	45	60	5	15	30	45	60	°
3.0	7.3					7.3					7.3															3.0
3.5	7.3					7.3					7.3															3.5
4.0	7.3					7.3	7.3				7.3	7.3				7.3										4.0
4.5	7.3					7.3	7.3				7.3	7.3				7.3										4.5
5.0	7.3	7.3				7.3	7.3				7.3	7.3				7.3	7.3				7.3					5.0
6.0	7.3	7.3	7.3			7.3	7.3	7.3			7.3	7.3	7.3			7.3	7.3				7.3	7.3				6.0
7.0	7.3	7.3	7.3	6.9		7.3	7.3	7.3	6.9		7.3	7.3	7.3	6.9		7.3	7.3	7.3			7.3	7.3				7.0
8.0	7.3	7.3	7.3	6.6	5.0	7.3	7.3	7.3	6.6	5.0	7.3	7.3	7.3	6.6	5.0	7.3	7.3	7.3	6.8		7.3	7.3	7.3			8.0
9.0	7.3	7.3	7.3	6.4	4.9	7.3	7.3	7.3	6.4	4.9	7.3	7.3	7.3	6.4	4.9	7.3	7.3	7.3	6.6	5.0	7.3	7.3	7.3	6.7	5.0	9.0
10.0	7.3	7.3	7.3	6.3	4.9	7.3	7.3	7.3	6.3	4.9	7.3	7.3	7.3	6.3	4.9	7.3	7.3	7.3	6.4	4.9	7.3	7.3	7.3	6.5	4.9	10.0
11.0	7.3	7.3	7.3	6.1		7.3	7.3	7.3	6.1		7.3	7.3	7.3	6.1		7.3	7.3	7.3	6.3	4.8	7.3	7.3	7.3	6.4	4.9	11.0
12.0	7.3	7.3	7.2	6.0		7.3	7.3	7.2	6.0		7.3	7.3	7.2	6.0		7.3	7.3	7.3	6.1		7.3	7.3	7.3	6.3	4.8	12.0
14.0	7.3	7.3	6.7	5.7		7.3	7.3	6.7	5.7		7.3	7.3	6.7	5.7		7.2	6.9	6.5	5.9		7.3	7.3	7.3	6.0		14.0
16.0	7.3	7.1	6.3			7.3	7.1	6.3			7.3	7.1	6.3			6.4	6.1	5.9	5.7		7.3	7.3	7.0	5.8		16.0
18.0	7.0	6.6	6.0			7.0	6.6	6.0			7.0	6.6	6.0			5.7	5.5	5.3			7.3	7.3	6.6	5.7		18.0
20.0	6.3	6.1				6.3	6.1				6.3	6.1				5.1	5.0	4.9			6.6	7.0	6.3			20.0
22.0	5.8	5.7				5.8	5.7				5.8	5.7				4.6	4.5	4.5			5.0	5.3	5.7			22.0
24.0	5.3					5.3					5.3					4.2	4.1				3.7	3.9	4.2			24.0
26.0																3.8	3.8				2.6	2.8				26.0
28.0																					1.8	1.9				28.0
30.0																					1.0					30.0
32.0																										32.0
34.0																										34.0
36.0																										36.0
38.0																										38.0
40.0																										40.0
42.0																										42.0
44.0																										44.0
46.0																										46.0
48.0																										48.0
50.0																										50.0
52.0																										52.0
54.0																										54.0
56.0																										56.0
58.0																										58.0
60.0																										60.0
64.0																										64.0
% 1	0	0	0	0	0	0	0	0	0	0	0	0	0	0	0	0	0	0	0	0	92	92	92	92	92	1
% 2	0	0	0	0	0	0	0	0	0	0	46	46	46	46	46	0	0	0	0	0	92	92	92	92	92	2
% 3	0	0	0	0	0	46	46	46	46	46	46	46	46	46	46	0	0	0	0	0	0	0	0	0	0	3
% 4	46	46	46	46	46	46	46	46	46	46	0	0	0	0	0	0	0	0	0	0	0	0	0	0	0	4
% 5	46	46	46	46	46	0	0	0	0	0	0	0	0	0	0	46	46	46	46	46	0	0	0	0	0	5
% 6	0	0	0	0	0	0	0	0	0	0	0	0	0	0	0	92	92	92	92	92	0	0	0	0	0	6
ID	58	58	58	58	58	88	88	88	88	88	113	113	113	113	113	20	20	20	20	20	134	134	134	134	134	ID
[DEG]	21~84.7	33~84.7	50~84.7	63~84.7	75~84.7	21~84.7	33~84.7	50~84.7	63~84.7	75~84.7	21~84.7	33~84.7	50~84.7	63~84.7	75~84.7	29~84.7	30~84.7	46~84.7	63~84.7	76~84.7	26~84.7	34~84.7	48~84.7	63~84.7	76~84.7	[DEG]
	1	1	1	1	1	1	1	1	1	1	1	1	1	1	1	1	1	1	1	1	1	1	1	1	1	
	8.7t	8.7t	8.7t	8.7t	8.7t	8.7t	8.7t	8.7t	8.7t	8.7t	8.7t	8.7t	8.7t	8.7t	8.7t	8.7t	8.7t	8.7t	8.7t	8.7t	8.7t	8.7t	8.7t	8.7t	8.7t	

FLJ	1.6m + 7.4m	15.3 t	8.0m x 7.5m	360 °	JPN

m	30.0	30.0	30.0	30.0	30.0	30.0	30.0	30.0	30.0	30.0	33.7	33.7	33.7	33.7	33.7	37.4	37.4	37.4	37.4	37.4	37.4	37.4	37.4	37.4	37.4	m
°	5	15	30	45	60	5	15	30	45	60	5	15	30	45	60	5	15	30	45	60	5	15	30	45	60	°
3.0																										3.0
3.5																										3.5
4.0																										4.0
4.5																										4.5
5.0	7.3					7.3																				5.0
6.0	7.3	7.3				7.3	7.3				7.3															6.0
7.0	7.3	7.3				7.3	7.3				7.3	7.3				7.1					7.3					7.0
8.0	7.3	7.3	7.3			7.3	7.3	7.3			7.3	7.3				7.1	7.1				7.3	7.3				8.0
9.0	7.3	7.3	7.3			7.3	7.3	7.3	6.8		7.3	7.3	7.3			7.1	7.1				7.3	7.3				9.0
10.0	7.3	7.3	7.3	6.6	5.0	7.3	7.3	7.3	6.6	5.0	7.3	7.3	7.3	6.7		7.1	7.1	7.1			7.3	7.3	7.3			10.0
11.0	7.3	7.3	7.3	6.5	4.9	7.3	7.3	7.3	6.5	4.9	7.3	7.3	7.3	6.6	4.9	7.1	7.1	7.1	6.7	5.0	7.3	7.3	7.2	6.7		11.0
12.0	7.3	7.3	7.1	6.4	4.9	7.3	7.3	7.3	6.4	4.9	7.3	7.3	7.3	6.5	4.9	7.1	7.1	7.1	6.6	4.9	7.3	7.3	6.9	6.4	4.9	12.0
14.0	6.8	6.6	6.3	6.1		7.3	7.3	7.3	6.1		7.3	7.3	7.3	6.2	4.8	7.1	7.1	7.1	6.3	4.8	6.9	6.6	6.2	5.9	4.8	14.0
16.0	6.0	5.8	5.6	5.5		7.3	7.3	7.2	5.9		7.3	7.3	7.3	6.0		7.1	7.1	7.1	6.1		6.1	5.9	5.7	5.5		16.0
18.0	5.3	5.2	5.1	5.0		7.3	7.3	6.9	5.8		7.3	7.3	7.1	5.9		7.1	7.1	7.1	6.0		5.5	5.4	5.2	5.0		18.0
20.0	4.8	4.7	4.6	4.5		6.6	7.0	6.6	5.6		6.6	7.0	6.8	5.7		6.7	7.1	7.1	5.8		5.0	4.9	4.7	4.6		20.0
22.0	4.3	4.3	4.2			5.0	5.3	5.7			5.0	5.3	5.8	5.6		5.1	5.5	6.0	5.7		4.6	4.5	4.3	4.3		22.0
24.0	3.9	3.9	3.8			3.7	4.0	4.3			3.7	4.0	4.4			3.8	4.2	4.6	4.8		4.2	4.1	4.0	4.0		24.0
26.0	3.5	3.5	3.5			2.6	2.9	3.1			2.6	2.9	3.2			2.8	3.1	3.4			3.9	3.8	3.7			26.0
28.0	3.2	3.1				1.7	1.9				1.7	2.0	2.2			1.9	2.1	2.4			3.6	3.5	3.5			28.0
30.0	2.8	2.8				1.0	1.2				1.0	1.2	1.4			1.1	1.3	1.6			3.4	3.3	3.2			30.0
32.0	2.5	2.5																0.9			3.1	3.1	3.0			32.0
34.0	2.2																				2.5	2.6				34.0
36.0																					2.0	2.1				36.0
38.0																					1.5	1.6				38.0
40.0																					1.1					40.0
42.0																										42.0
44.0																										44.0
46.0																										46.0
48.0																										48.0
50.0																										50.0
52.0																										52.0
54.0																										54.0
56.0																										56.0
58.0																										58.0
60.0																										60.0
64.0																										64.0
1	0	0	0	0	0	92	92	92	92	92	92	92	92	92	92	92	92	92	92	92	0	0	0	0	0	1
2	0	0	0	0	0	92	92	92	92	92	92	92	92	92	92	92	92	92	92	92	0	0	0	0	0	2
3	0	0	0	0	0	46	46	46	46	46	92	92	92	92	92	92	92	92	92	92	46	46	46	46	46	3
4	46	46	46	46	46	0	0	0	0	0	0	0	0	0	0	46	46	46	46	46	92	92	92	92	92	4
5	92	92	92	92	92	0	0	0	0	0	0	0	0	0	0	0	0	0	0	0	92	92	92	92	92	5
6	92	92	92	92	92	0	0	0	0	0	0	0	0	0	0	0	0	0	0	0	92	92	92	92	92	6
ID	22	22	22	22	22	116	116	116	116	116	110	110	110	110	110	93	93	93	93	93	24	24	24	24	24	ID
[DEG]	24~84.7	32~84.7	50~84.7	63~84.7	78~84.7	36~84.7	38~84.7	49~84.7	63~84.7	78~84.7	43~84.7	45~84.7	46~84.7	63~84.7	76~84.7	49~84.7	50~84.7	47~84.7	63~84.7	78~84.7	27~84.7	34~84.7	49~84.7	63~84.7	78~84.7	[DEG]
	1	1	1	1	1	1	1	1	1	1	1	1	1	1	1	1	1	1	1	1	1	1	1	1	1	
	8.7t	8.7t	8.7t	8.7t	8.7t	8.7t	8.7t	8.7t	8.7t	8.7t	8.7t	8.7t	8.7t	8.7t	8.7t	8.7t	8.7t	8.7t	8.7t	8.7t	8.7t	8.7t	8.7t	8.7t	8.7t	

m	41.2	41.2	41.2	41.2	41.2	44.9	44.9	44.9	44.9	44.9	44.9	44.9	44.9	44.9	44.9	48.6	48.6	48.6	48.6	48.6	48.6	48.6	48.6	48.6	48.6	m
°	5	15	30	45	60	5	15	30	45	60	5	15	30	45	60	5	15	30	45	60	5	15	30	45	60	°
3.0																										3.0
3.5																										3.5
4.0																										4.0
4.5																										4.5
5.0																										5.0
6.0																										6.0
7.0	7.3																									7.0
8.0	7.3										6.5															8.0
9.0	7.3	7.3				4.6					6.5					4.8					5.4					9.0
10.0	7.3	7.3	7.3			4.6	4.6				6.5	6.5				4.8					5.4					10.0
11.0	7.3	7.3	7.3			4.6	4.6				6.5	6.5	6.5			4.8	4.8				5.4	5.4				11.0
12.0	7.3	7.3	7.3	6.6	4.9	4.6	4.6	4.6			6.5	6.5	6.5			4.8	4.8	4.8			5.4	5.4	5.4			12.0
14.0	7.3	7.3	7.3	6.4	4.9	4.6	4.6	4.6	4.6	4.6	6.5	6.5	6.5	6.5	4.9	4.8	4.8	4.8	4.8	4.8	5.4	5.4	5.4	5.4	4.9	14.0
16.0	7.3	7.3	7.3	6.2		4.6	4.6	4.6	4.6	4.6	6.5	6.5	6.5	6.3	4.8	4.8	4.8	4.8	4.8	4.8	5.4	5.4	5.4	5.4	4.8	16.0
18.0	7.3	7.3	7.2	6.1		4.6	4.6	4.6	4.6		6.5	6.5	6.5	6.1		4.8	4.8	4.8	4.8		5.4	5.4	5.4	5.4		18.0
20.0	6.9	7.3	7.1	5.9		4.6	4.6	4.6	4.6		6.5	6.5	6.5	6.0		4.8	4.8	4.8	4.8		5.4	5.4	5.4	5.4		20.0
22.0	5.2	5.6	6.1	5.8		4.6	4.5	4.3	4.2		5.5	5.8	6.3	5.9		4.8	4.8	4.8	4.7		5.4	5.4	5.4	5.4		22.0
24.0	4.0	4.3	4.7	5.0		4.3	4.2	4.0	4.0		4.2	4.5	4.9	5.2		4.8	4.8	4.6	4.5		4.4	4.7	5.1	5.4		24.0
26.0	2.9	3.2	3.5	3.8		4.0	3.9	3.8	3.7		3.1	3.4	3.8	4.0		4.0	4.3	4.3	4.2		3.3	3.6	4.0	4.2		26.0
28.0	2.0	2.3	2.6			3.7	3.6	3.5	3.5		2.2	2.5	2.8	3.0		3.1	3.3	3.6	3.8		2.4	2.7	3.0	3.2		28.0
30.0	1.2	1.5	1.7			3.2	3.4	3.3			1.5	1.7	2.0			2.3	2.5	2.8	3.0		1.6	1.9	2.1	2.3		30.0
32.0			1.0			2.5	2.7	2.9				1.0	1.2			1.7	1.9	2.1			1.0	1.2	1.4			32.0
34.0						2.0	2.1	2.3								1.1	1.3	1.5								34.0
36.0						1.5	1.6	1.7										0.9								36.0
38.0						1.0	1.1																			38.0
40.0																										40.0
42.0																										42.0
44.0																										44.0
46.0																										46.0
48.0																										48.0
50.0																										50.0
52.0																										52.0
54.0																										54.0
56.0																										56.0
58.0																										58.0
60.0																										60.0
64.0																										64.0
1	92	92	92	92	92	0	0	0	0	0	92	92	92	92	92	46	46	46	46	46	92	92	92	92	92	1
2	92	92	92	92	92	46	46	46	46	46	92	92	92	92	92	92	92	92	92	92	92	92	92	92	92	2
3	92	92	92	92	92	92	92	92	92	92	92	92	92	92	92	92	92	92	92	92	92	92	92	92	92	3
4	92	92	92	92	92	92	92	92	92	92	92	92	92	92	92	92	92	92	92	92	92	92	92	92	92	4
5	0	0	0	0	0	92	92	92	92	92	46	46	46	46	46	92	92	92	92	92	92	92	92	92	92	5
6	0	0	0	0	0	92	92	92	92	92	0	0	0	0	0	46	46	46	46	46	0	0	0	0	0	6
ID	83	83	83	83	83	26	26	26	26	26	65	65	65	65	65	38	38	38	38	38	49	49	49	49	49	ID
[DEG]	53~84.7	54~84.7	52~84.7	63~84.7	79~84.7	45~84.7	46~84.7	50~84.7	63~84.7	78~84.7	56~84.7	55~84.7	56~84.7	63~84.7	78~84.7	54~84.7	55~84.7	54~84.7	63~84.7	79~84.7	57~84.7	58~84.7	59~84.7	63~84.7	79~84.7	[DEG]
	1	1	1	1	1	1	1	1	1	1	1	1	1	1	1	1	1	1	1	1	1	1	1	1	1	
	8.7t	8.7t	8.7t	8.7t	8.7t	8.7t	8.7t	8.7t	8.7t	8.7t	8.7t	8.7t	8.7t	8.7t	8.7t	8.7t	8.7t	8.7t	8.7t	8.7t	8.7t	8.7t	8.7t	8.7t	8.7t	

フルオートラフィングジブ

FLJ	1.6m + 7.4m	15.3 t	8.0m x 7.5m	360 °	JPN

m	52.3	52.3	52.3	52.3	52.3	52.3	52.3	52.3	52.3	52.3	56.0	56.0	56.0	56.0	56.0	60.0	60.0	60.0	60.0	60.0						m
°	5	15	30	45	60	5	15	30	45	60	5	15	30	45	60	5	15	30	45	60						°
3.0																										3.0
3.5																										3.5
4.0																										4.0
4.5																										4.5
5.0																										5.0
6.0																										6.0
7.0																										7.0
8.0																										8.0
9.0																										9.0
10.0	3.9					4.4																				10.0
11.0	3.9					4.4					3.7															11.0
12.0	3.9	3.9				4.4	4.4				3.7															12.0
14.0	3.9	3.9	3.9			4.4	4.4	4.4			3.7	3.7	3.7			3.2	3.2									14.0
16.0	3.9	3.9	3.9	3.9	3.9	4.4	4.4	4.4	4.4	4.4	3.7	3.7	3.7	3.7	3.7	3.2	3.2	3.2	3.2							16.0
18.0	3.9	3.9	3.9	3.9	3.9	4.4	4.4	4.4	4.4	4.4	3.7	3.7	3.7	3.7	3.7	3.2	3.2	3.2	3.2	3.2						18.0
20.0	3.9	3.9	3.9	3.9		4.4	4.4	4.4	4.4		3.7	3.7	3.7	3.7		3.2	3.2	3.2	3.2	3.2						20.0
22.0	3.9	3.9	3.9	3.9		4.4	4.4	4.4	4.4		3.7	3.7	3.7	3.7		3.2	3.2	3.2	3.2							22.0
24.0	3.9	3.9	3.9	3.9		4.4	4.4	4.4	4.4		3.7	3.7	3.7	3.7		3.2	3.2	3.2	3.2							24.0
26.0	3.9	3.9	3.7	3.6		3.5	3.8	4.2	4.1		3.7	3.7	3.7	3.6		3.2	3.2	3.2	3.2							26.0
28.0	3.3	3.5	3.5	3.4		2.6	2.9	3.2	3.4		2.8	3.1	3.4	3.4		2.8	3.0	3.2	3.2							28.0
30.0	2.5	2.7	3.0	3.2		1.9	2.1	2.4	2.6		2.1	2.3	2.6	2.8		2.0	2.2	2.5	2.7							30.0
32.0	1.9	2.1	2.3			1.2	1.4	1.7			1.4	1.6	1.9	2.1		1.3	1.6	1.8	2.0							32.0
34.0	1.3	1.5	1.7					1.1				1.0	1.3					1.2	1.4							34.0
36.0		0.9	1.1																							36.0
38.0																										38.0
40.0																										40.0
42.0																										42.0
44.0																										44.0
46.0																										46.0
48.0																										48.0
50.0																										50.0
52.0																										52.0
54.0																										54.0
56.0																										56.0
58.0																										58.0
60.0																										60.0
64.0																										64.0
1	46	46	46	46	46	92	92	92	92	92	92	92	92	92	92	100	100	100	100	100						1
2	92	92	92	92	92	92	92	92	92	92	92	92	92	92	92	100	100	100	100	100						2
3	92	92	92	92	92	92	92	92	92	92	92	92	92	92	92	100	100	100	100	100						3
4	92	92	92	92	92	92	92	92	92	92	92	92	92	92	92	100	100	100	100	100						4
5	92	92	92	92	92	92	92	92	92	92	92	92	92	92	92	100	100	100	100	100						5
6	92	92	92	92	92	46	46	46	46	46	92	92	92	92	92	100	100	100	100	100						6
ID	28	28	28	28	28	39	39	39	39	39	29	29	29	29	29	19	19	19	19	19						ID
[DEG]	57~84.7	56~84.7	57~84.7	66~84.7	78~84.7	59~84.7	61~84.7	59~84.7	65~84.7	78~84.7	62~84.7	61~84.7	62~84.7	65~84.7	79~84.7	64~84.7	65~84.7	65~84.7	65~84.7	79~84.7						[DEG]
	1	1	1	1	1	1	1	1	1	1	1	1	1	1	1	1	1	1	1	1						
	8.7t	8.7t	8.7t	8.7t	8.7t	8.7t	8.7t	8.7t	8.7t	8.7t	8.7t	8.7t	8.7t	8.7t	8.7t	8.7t	8.7t	8.7t	8.7t	8.7t						

FLJ	1.6m + 12.4m	15.3 t	8.0m x 7.5m	360 °	JPN

m	11.4	11.4	11.4	11.4	11.4	15.1	15.1	15.1	15.1	15.1	15.1	15.1	15.1	15.1	15.1	15.1	15.1	15.1	15.1	15.1	18.8	18.8	18.8	18.8	18.8	m
°	5	15	30	45	60	5	15	30	45	60	5	15	30	45	60	5	15	30	45	60	5	15	30	45	60	°
3.0	4.3																									3.0
3.5	4.3																									3.5
4.0	4.3					4.3					4.3					4.3					4.3					4.0
4.5	4.3					4.3					4.3					4.3					4.3					4.5
5.0	4.3					4.3					4.3					4.3					4.3					5.0
6.0	4.3	4.3				4.3	4.3				4.3	4.3				4.3	4.3				4.3					6.0
7.0	4.3	4.3				4.3	4.3				4.3	4.3				4.3	4.3				4.3	4.3				7.0
8.0	4.3	4.3				4.3	4.3				4.3	4.3				4.3	4.3				4.3	4.3				8.0
9.0	4.3	4.3	4.3			4.3	4.3	4.3			4.3	4.3	4.3			4.3	4.3	4.3			4.3	4.3				9.0
10.0	4.3	4.3	4.1			4.3	4.3	4.3			4.3	4.3	4.3			4.3	4.3	4.3			4.3	4.3	4.3			10.0
11.0	4.3	4.3	3.9	3.2		4.3	4.3	4.1	3.3		4.3	4.3	4.1	3.3		4.3	4.3	4.1	3.3		4.3	4.3	4.1			11.0
12.0	4.3	4.3	3.7	3.1		4.3	4.3	3.9	3.2		4.3	4.3	3.9	3.2		4.3	4.3	3.9	3.2		4.3	4.3	3.9	3.3		12.0
14.0	4.3	4.0	3.3	2.9		4.3	4.3	3.5	3.0		4.3	4.3	3.5	3.0		4.3	4.3	3.5	3.0		4.3	4.3	3.7	3.1		14.0
16.0	3.8	3.5	3.0	2.7		4.3	3.9	3.3	2.8		4.3	3.9	3.3	2.8		4.3	3.9	3.3	2.8		4.3	4.1	3.4	2.9		16.0
18.0	3.4	3.2	2.8			3.9	3.6	3.0	2.7		3.9	3.6	3.0	2.7		3.9	3.6	3.0	2.7		4.3	3.8	3.2	2.8		18.0
20.0	3.0	2.9				3.5	3.3	2.9			3.5	3.3	2.9			3.5	3.3	2.9			4.0	3.5	3.0	2.7		20.0
22.0	2.7					3.2	3.0				3.2	3.0				3.2	3.0				3.6	3.3	2.9			22.0
24.0						2.9	2.8				2.9	2.8				2.9	2.8				3.3	3.1	2.8			24.0
26.0																					3.0	2.9				26.0
28.0																					2.8					28.0
30.0																										30.0
32.0																										32.0
34.0																										34.0
36.0																										36.0
38.0																										38.0
40.0																										40.0
42.0																										42.0
44.0																										44.0
46.0																										46.0
48.0																										48.0
50.0																										50.0
52.0																										52.0
54.0																										54.0
56.0																										56.0
58.0																										58.0
60.0																										60.0
64.0																										64.0
1	0	0	0	0		0	0	0	0		0	0	0	0		0	0	0	0		0	0	0	0		1
2	0	0	0	0		0	0	0	0		0	0	0	0		46	46	46	46		0	0	0	0		2
3	0	0	0	0		0	0	0	0		46	46	46	46		0	0	0	0		0	0	0	0		3
4	0	0	0	0		46	46	46	46		0	0	0	0		0	0	0	0		0	0	0	0		4
5	0	0	0	0		0	0	0	0		0	0	0	0		0	0	0	0		46	46	46	46		5
6	0	0	0	0		0	0	0	0		0	0	0	0		0	0	0	0		46	46	46	46		6
ID	1	1	1	1		76	76	76	76		105	105	105	105		131	131	131	131		30	30	30	30		ID
[DEG]	0~84.7	0~84.7	0~84.7	0~84.7		29~84.7	32~84.7	51~84.7	60~84.7		29~84.7	31~84.7	51~84.7	60~84.7		29~84.7	31~84.7	51~84.7	60~84.7		26~84.7	37~84.7	46~84.7	60~84.7		[DEG]
	1	1	1	1		1	1	1	1		1	1	1	1		1	1	1	1		1	1	1	1		
	8.7t	8.7t	8.7t	8.7t		8.7t	8.7t	8.7t	8.7t		8.7t	8.7t	8.7t	8.7t		8.7t	8.7t	8.7t	8.7t		8.7t	8.7t	8.7t	8.7t		

FLJ	1.6m + 12.4m	15.3 t	8.0m x 7.5m	360 °	JPN

m	18.8	18.8	18.8	18.8	18.8	18.8	18.8	18.8	18.8	18.8	18.8	18.8	18.8	18.8	18.8	22.6	22.6	22.6	22.6	22.6	26.3	26.3	26.3	26.3	26.3	m
°	5	15	30	45	60	5	15	30	45	60	5	15	30	45	60	5	15	30	45	60	5	15	30	45	60	°
3.0																										3.0
3.5																										3.5
4.0	4.3					4.3					4.3															4.0
4.5	4.3					4.3					4.3															4.5
5.0	4.3					4.3					4.3					4.3										5.0
6.0	4.3					4.3					4.3					4.3					4.3					6.0
7.0	4.3	4.3				4.3	4.3				4.3	4.3				4.3	4.3				4.3					7.0
8.0	4.3	4.3				4.3	4.3				4.3	4.3				4.3	4.3				4.3	4.3				8.0
9.0	4.3	4.3				4.3	4.3				4.3	4.3				4.3	4.3				4.3	4.3				9.0
10.0	4.3	4.3	4.3			4.3	4.3	4.3			4.3	4.3	4.3			4.3	4.3				4.3	4.3				10.0
11.0	4.3	4.3	4.1			4.3	4.3	4.2			4.3	4.3	4.2			4.3	4.3	4.1			4.3	4.3	4.3			11.0
12.0	4.3	4.3	4.0	3.3		4.3	4.3	4.0	3.3		4.3	4.3	4.0	3.3		4.3	4.3	4.0			4.3	4.3	4.2			12.0
14.0	4.3	4.3	3.7	3.1		4.3	4.3	3.7	3.1		4.3	4.3	3.7	3.1		4.3	4.3	3.7	3.1		4.3	4.3	3.9	3.2	2.7	14.0
16.0	4.3	4.1	3.5	2.9		4.3	4.2	3.5	2.9		4.3	4.2	3.5	2.9		4.3	4.2	3.5	3.0		4.3	4.3	3.7	3.0	2.6	16.0
18.0	4.3	3.8	3.2	2.8		4.3	3.8	3.2	2.8		4.3	3.9	3.2	2.8		4.3	3.9	3.3	2.9		4.3	4.2	3.5	2.9		18.0
20.0	4.0	3.6	3.0	2.7		4.0	3.6	3.0	2.7		4.0	3.6	3.0	2.7		4.2	3.7	3.1	2.8		4.3	4.0	3.3	2.8		20.0
22.0	3.6	3.3	2.9			3.6	3.3	2.9			3.6	3.3	2.9			3.9	3.4	3.0			4.3	3.7	3.2	2.7		22.0
24.0	3.3	3.1	2.8			3.3	3.1	2.8			3.3	3.1	2.8			3.6	3.3	2.9			4.0	3.5	3.0			24.0
26.0	3.0	2.9				3.0	2.9				3.0	2.9				3.4	3.1	2.8			3.8	3.3	2.9			26.0
28.0	2.8					2.8					2.8					3.2	3.0				3.0	3.2	2.8			28.0
30.0																2.9	2.8				2.2	2.4				30.0
32.0																2.7					1.5	1.7				32.0
34.0																					0.9	1.1				34.0
36.0																										36.0
38.0																										38.0
40.0																										40.0
42.0																										42.0
44.0																										44.0
46.0																										46.0
48.0																										48.0
50.0																										50.0
52.0																										52.0
54.0																										54.0
56.0																										56.0
58.0																										58.0
60.0																										60.0
64.0																										64.0
1	0	0	0	0		0	0	0	0		0	0	0	0		0	0	0	0		92	92	92	92	92	1
2	0	0	0	0		0	0	0	0		46	46	46	46		0	0	0	0		92	92	92	92	92	2
3	0	0	0	0		46	46	46	46		46	46	46	46		0	0	0	0		0	0	0	0	0	3
4	46	46	46	46		46	46	46	46		0	0	0	0		0	0	0	0		0	0	0	0	0	4
5	46	46	46	46		0	0	0	0		0	0	0	0		46	46	46	46		0	0	0	0	0	5
6	0	0	0	0		0	0	0	0		0	0	0	0		92	92	92	92		0	0	0	0	0	6
ID	58	58	58	58		88	88	88	88		113	113	113	113		20	20	20	20		134	134	134	134	134	ID
[DEG]	26~84.7	37~84.7	46~84.7	60~84.7		26~84.7	37~84.7	46~84.7	60~84.7		26~84.7	37~84.7	46~84.7	60~84.7		24~84.7	34~84.7	49~84.7	65~84.7		29~84.7	31~84.7	50~84.7	64~84.7	77~84.7	[DEG]
	1	1	1	1		1	1	1	1		1	1	1	1		1	1	1	1		1	1	1	1	1	
	8.7t	8.7t	8.7t	8.7t		8.7t	8.7t	8.7t	8.7t		8.7t	8.7t	8.7t	8.7t		8.7t	8.7t	8.7t	8.7t		8.7t	8.7t	8.7t	8.7t	8.7t	

m	30.0	30.0	30.0	30.0	30.0	30.0	30.0	30.0	30.0	30.0	33.7	33.7	33.7	33.7	33.7	37.4	37.4	37.4	37.4	37.4	37.4	37.4	37.4	37.4	37.4	m
°	5	15	30	45	60	5	15	30	45	60	5	15	30	45	60	5	15	30	45	60	5	15	30	45	60	°
3.0																										3.0
3.5																										3.5
4.0																										4.0
4.5																										4.5
5.0																										5.0
6.0	4.0					4.3																				6.0
7.0	4.0					4.3					4.3					4.1										7.0
8.0	4.0					4.3					4.3					4.1					4.3					8.0
9.0	4.0	4.0				4.3	4.3				4.3	4.3				4.1					4.3					9.0
10.0	4.0	4.0				4.3	4.3				4.3	4.3				4.1	4.1				4.3	4.3				10.0
11.0	4.0	4.0				4.3	4.3	4.3			4.3	4.3				4.1	4.1				4.3	4.3				11.0
12.0	4.0	4.0	4.0			4.3	4.3	4.2			4.3	4.3	4.2			4.1	4.1				4.3	4.3				12.0
14.0	4.0	4.0	3.7	3.2		4.3	4.3	3.9	3.2		4.3	4.3	3.9	3.3		4.1	4.1	3.9			4.3	4.3	3.7			14.0
16.0	4.0	4.0	3.5	3.1		4.3	4.3	3.7	3.1		4.3	4.3	3.7	3.2	2.6	4.1	4.1	3.7	3.2	2.6	4.3	4.3	3.5	3.1		16.0
18.0	4.0	4.0	3.4	3.0		4.3	4.3	3.5	3.0		4.3	4.3	3.6	3.0	2.6	4.1	4.1	3.6	3.1	2.6	4.3	4.1	3.4	3.0		18.0
20.0	4.0	3.8	3.2	2.9		4.3	4.1	3.4	2.9		4.3	4.1	3.4	2.9		4.1	4.1	3.4	3.0		4.3	3.9	3.2	2.9		20.0
22.0	4.0	3.6	3.1	2.8		4.3	3.8	3.2	2.8		4.3	3.9	3.3	2.8		4.1	3.9	3.3	2.9		4.2	3.7	3.1	2.8		22.0
24.0	3.7	3.4	3.0	2.7		4.2	3.6	3.1	2.7		4.3	3.7	3.1	2.8		4.1	3.8	3.2	2.8		3.9	3.5	3.0	2.7		24.0
26.0	3.4	3.3	2.9			3.8	3.5	3.0			3.7	3.5	3.0	2.7		3.7	3.6	3.0	2.7		3.6	3.4	2.9	2.7		26.0
28.0	3.1	3.1	2.8			2.9	3.2	2.9			2.8	3.2	2.9			2.8	3.3	2.9	2.7		3.3	3.2	2.8	2.6		28.0
30.0	2.8	2.8	2.7			2.1	2.4	2.8			2.0	2.4	2.8			2.1	2.4	2.9			3.1	3.0	2.7			30.0
32.0	2.5	2.5	2.5			1.4	1.7	2.0			1.3	1.6	2.0			1.4	1.7	2.1			2.9	2.8	2.7			32.0
34.0	2.2	2.2					1.1					1.0	1.3				1.1	1.4			2.7	2.7	2.6			34.0
36.0		2.0																			2.5	2.4	2.4			36.0
38.0																					2.1	2.2				38.0
40.0																					1.7	1.8				40.0
42.0																					1.4	1.5				42.0
44.0																										44.0
46.0																										46.0
48.0																										48.0
50.0																										50.0
52.0																										52.0
54.0																										54.0
56.0																										56.0
58.0																										58.0
60.0																										60.0
64.0																										64.0
1	0	0	0	0		92	92	92	92		92	92	92	92	92	92	92	92	92	92	0	0	0	0		1
2	0	0	0	0		92	92	92	92		92	92	92	92	92	92	92	92	92	92	0	0	0	0		2
3	0	0	0	0		46	46	46	46		92	92	92	92	92	92	92	92	92	92	46	46	46	46		3
4	46	46	46	46		0	0	0	0		0	0	0	0	0	46	46	46	46	46	92	92	92	92		4
5	92	92	92	92		0	0	0	0		0	0	0	0	0	0	0	0	0	0	92	92	92	92		5
6	92	92	92	92		0	0	0	0		0	0	0	0	0	0	0	0	0	0	92	92	92	92		6
ID	22	22	22	22		116	116	116	116		110	110	110	110	110	93	93	93	93	93	24	24	24	24		ID
[DEG]	39~84.7	36~84.7	47~84.7	64~84.7		42~84.7	40~84.7	47~84.7	64~84.7		47~84.7	46~84.7	48~84.7	64~84.7	77~84.7	52~84.7	51~84.7	53~84.7	64~84.7	79~84.7	35~84.7	37~84.7	50~84.7	64~84.7		[DEG]
	1	1	1	1		1	1	1	1		1	1	1	1	1	1	1	1	1	1	1	1	1	1		
	8.7t	8.7t	8.7t	8.7t		8.7t	8.7t	8.7t	8.7t		8.7t	8.7t	8.7t	8.7t	8.7t	8.7t	8.7t	8.7t	8.7t	8.7t	8.7t	8.7t	8.7t	8.7t		

フルオートラフィングジブ

FLJ	1.6m + 12.4m	15.3 t	8.0m x 7.5m	360 °	JPN

m	41.2	41.2	41.2	41.2	41.2	44.9	44.9	44.9	44.9	44.9	44.9	44.9	44.9	44.9	44.9	48.6	48.6	48.6	48.6	48.6	48.6	48.6	48.6	48.6	48.6	m
°	5	15	30	45	60	5	15	30	45	60	5	15	30	45	60	5	15	30	45	60	5	15	30	45	60	°
3.0																										3.0
3.5																										3.5
4.0																										4.0
4.5																										4.5
5.0																										5.0
6.0																										6.0
7.0																										7.0
8.0	4.3																									8.0
9.0	4.3										4.0															9.0
10.0	4.3					3.0					4.0					3.2					3.6					10.0
11.0	4.3	4.3				3.0					4.0	4.0				3.2					3.6					11.0
12.0	4.3	4.3				3.0	3.0				4.0	4.0				3.2	3.2				3.6	3.6				12.0
14.0	4.3	4.3	3.9			3.0	3.0				4.0	4.0				3.2	3.2				3.6	3.6				14.0
16.0	4.3	4.3	3.7	3.2		3.0	3.0	3.0			4.0	4.0	3.7			3.2	3.2	3.2			3.6	3.6	3.6			16.0
18.0	4.3	4.3	3.5	3.1	2.6	3.0	3.0	3.0	2.9		4.0	4.0	3.5	3.0	2.6	3.2	3.2	3.2	3.0		3.6	3.6	3.5	3.0		18.0
20.0	4.3	4.1	3.4	3.0	2.6	3.0	3.0	3.0	2.9		4.0	4.0	3.4	2.9	2.6	3.2	3.2	3.2	2.9	2.6	3.6	3.6	3.3	2.9	2.6	20.0
22.0	4.3	4.0	3.3	2.9		3.0	3.0	3.0	2.8		4.0	3.9	3.2	2.9		3.2	3.2	3.2	2.8	2.5	3.6	3.6	3.2	2.8	2.5	22.0
24.0	4.3	3.8	3.2	2.8		3.0	3.0	3.0	2.7		4.0	3.7	3.1	2.8		3.2	3.2	3.1	2.7		3.6	3.6	3.1	2.8		24.0
26.0	3.8	3.6	3.0	2.7		3.0	3.0	2.9	2.6		3.9	3.6	3.0	2.7		3.2	3.2	3.0	2.7		3.6	3.5	3.0	2.7		26.0
28.0	2.9	3.3	2.9	2.7		3.0	3.0	2.8	2.6		3.0	3.5	2.9	2.7		3.2	3.2	2.9	2.6		3.2	3.4	2.9	2.6		28.0
30.0	2.1	2.5	2.9	2.6		3.0	3.0	2.7	2.5		2.2	2.6	2.9	2.6		3.0	3.2	2.8	2.6		2.4	2.8	2.8	2.6		30.0
32.0	1.4	1.8	2.2			3.0	2.9	2.7	2.5		1.6	1.9	2.4	2.6		2.3	2.7	2.7	2.5		1.7	2.1	2.5	2.5		32.0
34.0	0.9	1.2	1.5			2.6	2.7	2.6			1.0	1.3	1.7			1.7	2.0	2.4	2.5		1.1	1.4	1.8	2.1		34.0
36.0			0.9			2.0	2.3	2.5					1.1			1.2	1.5	1.8				0.9	1.3			36.0
38.0						1.6	1.8	2.0									1.0	1.3								38.0
40.0						1.2	1.4	1.6																		40.0
42.0							1.0	1.1																		42.0
44.0																										44.0
46.0																										46.0
48.0																										48.0
50.0																										50.0
52.0																										52.0
54.0																										54.0
56.0																										56.0
58.0																										58.0
60.0																										60.0
64.0																										64.0
1	92	92	92	92	92	0	0	0	0		92	92	92	92	92	46	46	46	46	46	92	92	92	92	92	1
2	92	92	92	92	92	46	46	46	46		92	92	92	92	92	92	92	92	92	92	92	92	92	92	92	2
3	92	92	92	92	92	92	92	92	92		92	92	92	92	92	92	92	92	92	92	92	92	92	92	92	3
4	92	92	92	92	92	92	92	92	92		92	92	92	92	92	92	92	92	92	92	92	92	92	92	92	4
5	0	0	0	0	0	92	92	92	92		46	46	46	46	46	92	92	92	92	92	92	92	92	92	92	5
6	0	0	0	0	0	92	92	92	92		0	0	0	0	0	46	46	46	46	46	0	0	0	0	0	6
ID	83	83	83	83	83	26	26	26	26		65	65	65	65	65	38	38	38	38	38	49	49	49	49	49	ID
[DEG]	52~84.7	54~84.7	53~84.7	64~84.7	78~84.7	48~84.7	47~84.7	49~84.7	64~84.7		56~84.7	58~84.7	57~84.7	64~84.7	79~84.7	56~84.7	56~84.7	58~84.7	64~84.7	78~84.7	59~84.7	58~84.7	60~84.7	64~84.7	78~84.7	[DEG]
	1	1	1	1	1	1	1	1	1		1	1	1	1	1	1	1	1	1	1	1	1	1	1	1	
	8.7t	8.7t	8.7t	8.7t	8.7t	8.7t	8.7t	8.7t	8.7t		8.7t	8.7t	8.7t	8.7t	8.7t	8.7t	8.7t	8.7t	8.7t	8.7t	8.7t	8.7t	8.7t	8.7t	8.7t	

m	52.3	52.3	52.3	52.3	52.3	52.3	52.3	52.3	52.3	52.3	56.0	56.0	56.0	56.0	56.0	60.0	60.0	60.0	60.0	60.0						m
°	5	15	30	45	60	5	15	30	45	60	5	15	30	45	60	5	15	30	45	60						°
3.0																										3.0
3.5																										3.5
4.0																										4.0
4.5																										4.5
5.0																										5.0
6.0																										6.0
7.0																										7.0
8.0																										8.0
9.0																										9.0
10.0																										10.0
11.0	2.7					3.0																				11.0
12.0	2.7					3.0					2.6															12.0
14.0	2.7	2.7				3.0	3.0				2.6	2.6				1.9										14.0
16.0	2.7	2.7	2.7			3.0	3.0	3.0			2.6	2.6				1.9	1.9									16.0
18.0	2.7	2.7	2.7			3.0	3.0	3.0			2.6	2.6	2.6			1.9	1.9	1.9								18.0
20.0	2.7	2.7	2.7	2.7	2.6	3.0	3.0	3.0	2.9	2.6	2.6	2.6	2.6	2.6		1.9	1.9	1.9	1.9							20.0
22.0	2.7	2.7	2.7	2.7	2.5	3.0	3.0	3.0	2.8	2.5	2.6	2.6	2.6	2.6	2.5	1.9	1.9	1.9	1.9	1.9						22.0
24.0	2.7	2.7	2.7	2.7		3.0	3.0	3.0	2.7		2.6	2.6	2.6	2.6	2.5	1.9	1.9	1.9	1.9	1.9						24.0
26.0	2.7	2.7	2.7	2.6		3.0	3.0	3.0	2.7		2.6	2.6	2.6	2.6		1.9	1.9	1.9	1.9							26.0
28.0	2.7	2.7	2.7	2.6		3.0	3.0	2.9	2.6		2.6	2.6	2.6	2.6		1.9	1.9	1.9	1.9							28.0
30.0	2.7	2.7	2.7	2.5		2.6	2.9	2.8	2.5		2.6	2.6	2.6	2.5		1.9	1.9	1.9	1.9							30.0
32.0	2.5	2.7	2.7	2.5		1.9	2.2	2.7	2.5		2.0	2.4	2.6	2.5		1.9	1.9	1.9	1.9							32.0
34.0	1.9	2.2	2.5	2.4		1.3	1.6	2.0	2.3		1.5	1.8	2.2	2.4		1.4	1.7	1.9	1.9							34.0
36.0	1.4	1.6	2.0	2.2			1.1	1.4	1.7		0.9	1.2	1.6	1.9			1.1	1.5	1.8							36.0
38.0	0.9	1.2	1.5					0.9					1.1	1.3					1.3							38.0
40.0			1.0																							40.0
42.0																										42.0
44.0																										44.0
46.0																										46.0
48.0																										48.0
50.0																										50.0
52.0																										52.0
54.0																										54.0
56.0																										56.0
58.0																										58.0
60.0																										60.0
64.0																										64.0
1	46	46	46	46	46	92	92	92	92	92	92	92	92	92	92	100	100	100	100	100						1
2	92	92	92	92	92	92	92	92	92	92	92	92	92	92	92	100	100	100	100	100						2
3	92	92	92	92	92	92	92	92	92	92	92	92	92	92	92	100	100	100	100	100						3
4	92	92	92	92	92	92	92	92	92	92	92	92	92	92	92	100	100	100	100	100						4
5	92	92	92	92	92	92	92	92	92	92	92	92	92	92	92	100	100	100	100	100						5
6	92	92	92	92	92	46	46	46	46	46	92	92	92	92	92	100	100	100	100	100						6
ID	28	28	28	28	28	39	39	39	39	39	29	29	29	29	29	19	19	19	19	19						ID
[DEG]	57~84.7	59~84.7	58~84.7	64~84.7	79~84.7	61~84.7	61~84.7	60~84.7	64~84.7	79~84.7	61~84.7	63~84.7	63~84.7	64~84.7	79~84.7	66~84.7	65~84.7	67~84.7	66~84.7	79~84.7						[DEG]
	1	1	1	1	1	1	1	1	1	1	1	1	1	1	1	1	1	1	1	1						
	8.7t	8.7t	8.7t	8.7t	8.7t	8.7t	8.7t	8.7t	8.7t	8.7t	8.7t	8.7t	8.7t	8.7t	8.7t	8.7t	8.7t	8.7t	8.7t	8.7t						

FLJ	1.6m + 17.4m	15.3 t	8.0m x 7.5m	360 °	JPN

m	11.4	11.4	11.4	11.4	11.4	15.1	15.1	15.1	15.1	15.1	15.1	15.1	15.1	15.1	15.1	15.1	15.1	15.1	15.1	15.1	18.8	18.8	18.8	18.8	18.8	m
°	5	15	30	45	60	5	15	30	45	60	5	15	30	45	60	5	15	30	45	60	5	15	30	45	60	°
m 3.0																										3.0
3.5																										3.5
4.0																										4.0
4.5	3.3																									4.5
5.0	3.3					3.1					3.3					3.3										5.0
6.0	3.3					3.1					3.3					3.3					2.7					6.0
7.0	3.3					3.1					3.3					3.3					2.7					7.0
8.0	3.3	3.3				3.1					3.3					3.3					2.7					8.0
9.0	3.3	3.3				3.1	3.1				3.3	3.3				3.3	3.3				2.7	2.7				9.0
10.0	3.3	3.2				3.1	3.1				3.3	3.3				3.3	3.3				2.7	2.7				10.0
11.0	3.3	3.0				3.1	3.1				3.3	3.1				3.3	3.1				2.7	2.7				11.0
12.0	3.2	2.9	2.5			3.1	2.9				3.3	2.9				3.3	3.0				2.7	2.7				12.0
14.0	2.9	2.6	2.3			3.1	2.7	2.3			3.1	2.7	2.3			3.1	2.7	2.3			2.7	2.7	2.3			14.0
16.0	2.6	2.4	2.1	1.8		2.8	2.5	2.2	1.9		2.8	2.5	2.2	1.9		2.8	2.5	2.2	1.9		2.7	2.5	2.2			16.0
18.0	2.4	2.2	1.9	1.7		2.6	2.3	2.0	1.8		2.6	2.3	2.0	1.8		2.6	2.3	2.0	1.8		2.7	2.4	2.0	1.8		18.0
20.0	2.2	2.0	1.8	1.6		2.4	2.1	1.9	1.7		2.4	2.1	1.9	1.7		2.4	2.1	1.9	1.7		2.5	2.2	1.9	1.7		20.0
22.0	2.0	1.9	1.7			2.2	2.0	1.8	1.6		2.2	2.0	1.8	1.6		2.2	2.0	1.8	1.6		2.3	2.1	1.8	1.6		22.0
24.0	1.8	1.7				2.1	1.9	1.7			2.1	1.9	1.7			2.1	1.9	1.7			2.2	2.0	1.8	1.6		24.0
26.0	1.7	1.6				1.9	1.8	1.6			1.9	1.8	1.6			1.9	1.8	1.6			2.0	1.9	1.7			26.0
28.0						1.8	1.6				1.8	1.6				1.8	1.6				1.9	1.8	1.6			28.0
30.0						1.6					1.6					1.6					1.9	1.7				30.0
32.0																					1.7	1.6				32.0
34.0																					1.6					34.0
36.0																										36.0
38.0																										38.0
40.0																										40.0
42.0																										42.0
44.0																										44.0
46.0																										46.0
48.0																										48.0
50.0																										50.0
52.0																										52.0
54.0																										54.0
56.0																										56.0
58.0																										58.0
60.0																										60.0
64.0																										64.0
% 1	0	0	0	0		0	0	0	0		0	0	0	0		0	0	0	0		0	0	0	0		1
% 2	0	0	0	0		0	0	0	0		0	0	0	0		46	46	46	46		0	0	0	0		2
% 3	0	0	0	0		0	0	0	0		46	46	46	46		0	0	0	0		0	0	0	0		3
% 4	0	0	0	0		46	46	46	46		0	0	0	0		0	0	0	0		0	0	0	0		4
% 5	0	0	0	0		0	0	0	0		0	0	0	0		0	0	0	0		46	46	46	46		5
% 6	0	0	0	0		0	0	0	0		0	0	0	0		0	0	0	0		46	46	46	46		6
ID	1	1	1	1		76	76	76	76		105	105	105	105		131	131	131	131		30	30	30	30		ID
[DEG]	0~84.7	0~84.7	0~84.7	0~84.7		23~84.7	36~84.7	47~84.7	63~84.7		23~84.7	36~84.7	47~84.7	63~84.7		23~84.7	36~84.7	47~84.7	63~84.7		21~84.7	33~84.7	49~84.7	63~84.7		[DEG]
	1	1	1	1		1	1	1	1		1	1	1	1		1	1	1	1		1	1	1	1		
	8.7t	8.7t	8.7t	8.7t		8.7t	8.7t	8.7t	8.7t		8.7t	8.7t	8.7t	8.7t		8.7t	8.7t	8.7t	8.7t		8.7t	8.7t	8.7t	8.7t		

m	18.8	18.8	18.8	18.8	18.8	18.8	18.8	18.8	18.8	18.8	18.8	18.8	18.8	18.8	18.8	22.6	22.6	22.6	22.6	22.6	26.3	26.3	26.3	26.3	26.3	m
°	5	15	30	45	60	5	15	30	45	60	5	15	30	45	60	5	15	30	45	60	5	15	30	45	60	°
m 3.0																										3.0
3.5																										3.5
4.0																										4.0
4.5																										4.5
5.0																										5.0
6.0	2.9					3.2					3.3					2.5										6.0
7.0	2.9					3.2					3.3					2.5					3.3					7.0
8.0	2.9					3.2					3.3					2.5					3.3					8.0
9.0	2.9	2.9				3.2	3.2				3.3	3.3				2.5					3.3					9.0
10.0	2.9	2.9				3.2	3.2				3.3	3.3				2.5	2.5				3.3	3.3				10.0
11.0	2.9	2.9				3.2	3.2				3.3	3.2				2.5	2.5				3.3	3.3				11.0
12.0	2.9	2.9				3.2	3.0				3.3	3.0				2.5	2.5				3.3	3.2				12.0
14.0	2.9	2.8	2.3			3.2	2.8	2.3			3.2	2.8	2.3			2.5	2.5	2.3			3.3	2.9	2.4			14.0
16.0	2.9	2.5	2.2	1.9		2.9	2.6	2.2	1.9		3.0	2.6	2.2	1.9		2.5	2.5	2.2			3.2	2.7	2.2			16.0
18.0	2.7	2.4	2.1	1.8		2.7	2.4	2.1	1.8		2.7	2.4	2.1	1.8		2.5	2.4	2.1	1.8		3.0	2.5	2.1	1.9		18.0
20.0	2.5	2.2	1.9	1.7		2.5	2.2	1.9	1.7		2.5	2.2	2.0	1.7		2.5	2.3	1.9	1.7		2.8	2.4	2.0	1.8		20.0
22.0	2.3	2.1	1.9	1.6		2.3	2.1	1.9	1.6		2.4	2.1	1.9	1.6		2.4	2.1	1.9	1.7		2.6	2.3	1.9	1.7		22.0
24.0	2.2	2.0	1.8	1.6		2.2	2.0	1.8	1.6		2.2	2.0	1.8	1.6		2.3	2.0	1.8	1.6		2.4	2.1	1.9	1.6		24.0
26.0	2.1	1.9	1.7			2.1	1.9	1.7			2.1	1.9	1.7			2.1	1.9	1.7	1.5		2.3	2.0	1.8	1.6		26.0
28.0	1.9	1.8	1.6			2.0	1.8	1.6			2.0	1.8	1.6			2.0	1.8	1.7			2.2	1.9	1.7	1.5		28.0
30.0	1.9	1.7				1.9	1.7				1.9	1.7				1.9	1.8	1.6			2.1	1.9	1.7			30.0
32.0	1.7	1.6				1.7	1.6				1.7	1.6				1.8	1.7				2.0	1.8	1.6			32.0
34.0	1.6					1.6					1.6					1.8	1.6				1.8	1.7	1.6			34.0
36.0																1.7					1.3	1.6				36.0
38.0																					0.9	1.1				38.0
40.0																										40.0
42.0																										42.0
44.0																										44.0
46.0																										46.0
48.0																										48.0
50.0																										50.0
52.0																										52.0
54.0																										54.0
56.0																										56.0
58.0																										58.0
60.0																										60.0
64.0																										64.0
% 1	0	0	0	0		0	0	0	0		0	0	0	0		0	0	0	0		92	92	92	92		1
% 2	0	0	0	0		0	0	0	0		46	46	46	46		0	0	0	0		92	92	92	92		2
% 3	0	0	0	0		46	46	46	46		46	46	46	46		0	0	0	0		0	0	0	0		3
% 4	46	46	46	46		46	46	46	46		0	0	0	0		0	0	0	0		0	0	0	0		4
% 5	46	46	46	46		0	0	0	0		0	0	0	0		46	46	46	46		0	0	0	0		5
% 6	0	0	0	0		0	0	0	0		0	0	0	0		92	92	92	92		0	0	0	0		6
ID	58	58	58	58		88	88	88	88		113	113	113	113		20	20	20	20		134	134	134	134		ID
[DEG]	21~84.7	32~84.7	49~84.7	63~84.7		21~84.7	32~84.7	49~84.7	63~84.7		21~84.7	32~84.7	49~84.7	63~84.7		28~84.7	37~84.7	51~84.7	63~84.7		31~84.7	34~84.7	47~84.7	62~84.7		[DEG]
	1	1	1	1		1	1	1	1		1	1	1	1		1	1	1	1		1	1	1	1		
	8.7t	8.7t	8.7t	8.7t		8.7t	8.7t	8.7t	8.7t		8.7t	8.7t	8.7t	8.7t		8.7t	8.7t	8.7t	8.7t		8.7t	8.7t	8.7t	8.7t		

フルオートラフィングジブ

FLJ	1.6m + 17.4m	15.3 t	8.0m x 7.5m	360 °	JPN

m	30.0	30.0	30.0	30.0	30.0	30.0	30.0	30.0	30.0	30.0	33.7	33.7	33.7	33.7	33.7	37.4	37.4	37.4	37.4	37.4	37.4	37.4	37.4	37.4	37.4	m
°	5	15	30	45	60	5	15	30	45	60	5	15	30	45	60	5	15	30	45	60	5	15	30	45	60	°
m 3.0																										3.0
3.5																										3.5
4.0																										4.0
4.5																										4.5
5.0																										5.0
6.0																										6.0
7.0																										7.0
8.0	2.3					3.2					3.1															8.0
9.0	2.3					3.2					3.1					2.4					2.5					9.0
10.0	2.3					3.2					3.1					2.4					2.5					10.0
11.0	2.3	2.3				3.2	3.2				3.1					2.4					2.5					11.0
12.0	2.3	2.3				3.2	3.2				3.1	3.1				2.4	2.4				2.5					12.0
14.0	2.3	2.3				3.2	2.9				3.1	3.0				2.4	2.4				2.5	2.5				14.0
16.0	2.3	2.3	2.2			3.2	2.8	2.3			3.1	2.8	2.3			2.4	2.4	2.2			2.5	2.5				16.0
18.0	2.3	2.3	2.1			3.1	2.6	2.2	1.9		3.1	2.6	2.2			2.4	2.4	2.2			2.5	2.5	2.1			18.0
20.0	2.3	2.3	2.0	1.8		2.9	2.4	2.1	1.8	1.5	2.9	2.5	2.1	1.8		2.4	2.4	2.1	1.8		2.5	2.4	2.0	1.8		20.0
22.0	2.3	2.2	1.9	1.7		2.7	2.3	2.0	1.7	1.5	2.7	2.3	2.0	1.8		2.4	2.4	2.0	1.8	1.5	2.5	2.2	1.9	1.7	1.5	22.0
24.0	2.3	2.1	1.8	1.7		2.5	2.2	1.9	1.7		2.6	2.2	1.9	1.7		2.4	2.2	1.9	1.7	1.5	2.5	2.1	1.8	1.7	1.5	24.0
26.0	2.3	2.0	1.8	1.6		2.4	2.1	1.8	1.6		2.4	2.1	1.8	1.6		2.4	2.2	1.8	1.7		2.4	2.1	1.8	1.6		26.0
28.0	2.2	1.9	1.7	1.6		2.3	2.0	1.8	1.6		2.3	2.0	1.8	1.6		2.4	2.1	1.8	1.6		2.2	2.0	1.7	1.6		28.0
30.0	2.1	1.8	1.6	1.5		2.2	1.9	1.7	1.5		2.2	1.9	1.7	1.5		2.3	2.0	1.7	1.6		2.1	1.9	1.7	1.5		30.0
32.0	2.0	1.8	1.6			2.1	1.8	1.6			2.1	1.9	1.7	1.5		2.2	1.9	1.7	1.5		2.1	1.8	1.6	1.5		32.0
34.0	1.9	1.7	1.6			1.7	1.8	1.6			1.6	1.8	1.6			1.6	1.8	1.6	1.5		2.0	1.8	1.6	1.5		34.0
36.0		1.7	1.5			1.2	1.5	1.6			1.1	1.4	1.6			1.1	1.4	1.6			1.9	1.7	1.5			36.0
38.0		1.6					1.0					0.9	1.3				0.9	1.3			1.8	1.7	1.5			38.0
40.0		1.6																			1.8	1.6	1.5			40.0
42.0		1.5																			1.7	1.6	1.4			42.0
44.0																						1.5				44.0
46.0																						1.3				46.0
48.0																						1.0				48.0
50.0																										50.0
52.0																										52.0
54.0																										54.0
56.0																										56.0
58.0																										58.0
60.0																										60.0
64.0																										64.0
% 1	0	0	0	0		92	92	92	92	92	92	92	92	92		92	92	92	92	92	0	0	0	0	0	1
% 2	0	0	0	0		92	92	92	92	92	92	92	92	92		92	92	92	92	92	0	0	0	0	0	2
% 3	0	0	0	0		46	46	46	46	46	92	92	92	92		92	92	92	92	92	46	46	46	46	46	3
% 4	46	46	46	46		0	0	0	0	0	0	0	0	0		46	46	46	46	46	92	92	92	92	92	4
% 5	92	92	92	92		0	0	0	0	0	0	0	0	0		0	0	0	0	0	92	92	92	92	92	5
% 6	92	92	92	92		0	0	0	0	0	0	0	0	0		0	0	0	0	0	92	92	92	92	92	6
ID	22	22	22	22		116	116	116	116	116	110	110	110	110		93	93	93	93	93	24	24	24	24	24	ID
[DEG]	48~84.7	33~84.7	49~84.7	63~84.7		43~84.7	41~84.7	49~84.7	62~84.7	77~84.7	48~84.7	47~84.7	50~84.7	62~84.7		52~84.7	51~84.7	54~84.7	62~84.7	77~84.7	44~84.7	34~84.7	48~84.7	63~84.7	78~84.7	[DEG]
	1	1	1	1		1	1	1	1	1	1	1	1	1		1	1	1	1	1	1	1	1	1	1	
	8.7t	8.7t	8.7t	8.7t		8.7t	8.7t	8.7t	8.7t	8.7t	8.7t	8.7t	8.7t	8.7t		8.7t	8.7t	8.7t	8.7t	8.7t	8.7t	8.7t	8.7t	8.7t	8.7t	

m	41.2	41.2	41.2	41.2	41.2	44.9	44.9	44.9	44.9	44.9	44.9	44.9	44.9	44.9	44.9	48.6	48.6	48.6	48.6	48.6	48.6	48.6	48.6	48.6	48.6	m
°	5	15	30	45	60	5	15	30	45	60	5	15	30	45	60	5	15	30	45	60	5	15	30	45	60	°
m 3.0																										3.0
3.5																										3.5
4.0																										4.0
4.5																										4.5
5.0																										5.0
6.0																										6.0
7.0																										7.0
8.0																										8.0
9.0																										9.0
10.0	2.7										2.4															10.0
11.0	2.7					1.9					2.4					2.0					2.2					11.0
12.0	2.7					1.9					2.4					2.0					2.2					12.0
14.0	2.7	2.7				1.9	1.9				2.4	2.4				2.0	2.0				2.2	2.2				14.0
16.0	2.7	2.7				1.9	1.9				2.4	2.4				2.0	2.0				2.2	2.2				16.0
18.0	2.7	2.6	2.1			1.9	1.9	1.9			2.4	2.4	2.1			2.0	2.0				2.2	2.2				18.0
20.0	2.7	2.5	2.1	1.8		1.9	1.9	1.9			2.4	2.4	2.0			2.0	2.0	2.0			2.2	2.2	2.0			20.0
22.0	2.7	2.4	2.0	1.8	1.5	1.9	1.9	1.9	1.7		2.4	2.4	2.0	1.7		2.0	2.0	1.9	1.7		2.2	2.2	1.9	1.7		22.0
24.0	2.6	2.3	1.9	1.7	1.5	1.9	1.9	1.8	1.7	1.5	2.4	2.2	1.9	1.7	1.5	2.0	2.0	1.9	1.7	1.5	2.2	2.2	1.9	1.7	1.5	24.0
26.0	2.5	2.2	1.8	1.7		1.9	1.9	1.8	1.6	1.5	2.4	2.2	1.8	1.7	1.5	2.0	2.0	1.8	1.6	1.5	2.2	2.1	1.8	1.6	1.5	26.0
28.0	2.4	2.1	1.8	1.6		1.9	1.9	1.7	1.6		2.4	2.1	1.8	1.6		2.0	2.0	1.7	1.6		2.2	2.1	1.8	1.6		28.0
30.0	2.3	2.0	1.7	1.6		1.9	1.9	1.7	1.5		2.3	2.0	1.7	1.6		2.0	2.0	1.7	1.6		2.2	2.0	1.7	1.6		30.0
32.0	2.2	1.9	1.7	1.6		1.9	1.9	1.6	1.5		2.2	1.9	1.7	1.5		2.0	1.9	1.6	1.5		2.2	1.9	1.7	1.5		32.0
34.0	1.6	1.9	1.6	1.5		1.9	1.8	1.6	1.5		1.7	1.9	1.6	1.5		2.0	1.8	1.6	1.5		1.7	1.9	1.6	1.5		34.0
36.0	1.1	1.5	1.6	1.5		1.9	1.7	1.5	1.5		1.1	1.6	1.6	1.5		1.8	1.8	1.6	1.5		1.2	1.6	1.6	1.5		36.0
38.0		1.0	1.4			1.9	1.7	1.5				1.1	1.5			1.3	1.7	1.5	1.4			1.1	1.5	1.4		38.0
40.0			0.9			1.7	1.6	1.5					1.0			0.9	1.2	1.5					1.1			40.0
42.0						1.3	1.5	1.4										1.2								42.0
44.0						1.0	1.2	1.4																		44.0
46.0							0.9	1.1																		46.0
48.0																										48.0
50.0																										50.0
52.0																										52.0
54.0																										54.0
56.0																										56.0
58.0																										58.0
60.0																										60.0
64.0																										64.0
% 1	92	92	92	92	92	0	0	0	0	0	92	92	92	92	92	46	46	46	46	46	92	92	92	92	92	1
% 2	92	92	92	92	92	46	46	46	46	46	92	92	92	92	92	92	92	92	92	92	92	92	92	92	92	2
% 3	92	92	92	92	92	92	92	92	92	92	92	92	92	92	92	92	92	92	92	92	92	92	92	92	92	3
% 4	92	92	92	92	92	92	92	92	92	92	92	92	92	92	92	92	92	92	92	92	92	92	92	92	92	4
% 5	0	0	0	0	0	92	92	92	92	92	46	46	46	46	46	92	92	92	92	92	92	92	92	92	92	5
% 6	0	0	0	0	0	92	92	92	92	92	0	0	0	0	0	46	46	46	46	46	0	0	0	0	0	6
ID	83	83	83	83	83	26	26	26	26	26	65	65	65	65	65	38	38	38	38	38	49	49	49	49	49	ID
[DEG]	55~84.7	55~84.7	55~84.7	62~84.7	79~84.7	49~84.7	48~84.7	51~84.7	65~84.7	78~84.7	58~84.7	58~84.7	58~84.7	65~84.7	78~84.7	56~84.7	59~84.7	59~84.7	65~84.7	79~84.7	60~84.7	61~84.7	61~84.7	65~84.7	79~84.7	[DEG]
	1	1	1	1	1	1	1	1	1	1	1	1	1	1	1	1	1	1	1	1	1	1	1	1	1	
	8.7t	8.7t	8.7t	8.7t	8.7t	8.7t	8.7t	8.7t	8.7t	8.7t	8.7t	8.7t	8.7t	8.7t	8.7t	8.7t	8.7t	8.7t	8.7t	8.7t	8.7t	8.7t	8.7t	8.7t	8.7t	

FLJ	1.6m + 17.4m	15.3 t	8.0m x 7.5m	360 °	JPN

m	52.3	52.3	52.3	52.3	52.3	52.3	52.3	52.3	52.3	52.3	56.0	56.0	56.0	56.0	56.0	60.0	60.0	60.0	60.0	60.0						m
°	5	15	30	45	60	5	15	30	45	60	5	15	30	45	60	5	15	30	45	60						°
3.0																										3.0
3.5																										3.5
4.0																										4.0
4.5																										4.5
5.0																										5.0
6.0																										6.0
7.0																										7.0
8.0																										8.0
9.0																										9.0
10.0																										10.0
11.0																										11.0
12.0						2.0																				12.0
14.0	1.8					2.0					1.8															14.0
16.0	1.8	1.8				2.0	2.0				1.8	1.8				1.0										16.0
18.0	1.8	1.8				2.0	2.0				1.8	1.8				1.0	1.0									18.0
20.0	1.8	1.8	1.8			2.0	2.0	2.0			1.8	1.8				1.0	1.0									20.0
22.0	1.8	1.8	1.8			2.0	2.0	1.9			1.8	1.8	1.8			1.0	1.0	1.0								22.0
24.0	1.8	1.8	1.8	1.6		2.0	2.0	1.9	1.7		1.8	1.8	1.8	1.6		1.0	1.0	1.0								24.0
26.0	1.8	1.8	1.8	1.6	1.5	2.0	2.0	1.8	1.6	1.5	1.8	1.8	1.8	1.6	1.5	1.0	1.0	1.0	1.0							26.0
28.0	1.8	1.8	1.7	1.6	1.4	2.0	2.0	1.7	1.6	1.4	1.8	1.8	1.7	1.6	1.4	1.0	1.0	1.0	1.0	1.0						28.0
30.0	1.8	1.8	1.7	1.5		2.0	2.0	1.7	1.5		1.8	1.8	1.7	1.5		1.0	1.0	1.0	1.0	1.0						30.0
32.0	1.8	1.8	1.6	1.5		2.0	1.9	1.6	1.5		1.8	1.8	1.6	1.5		1.0	1.0	1.0	1.0							32.0
34.0	1.8	1.8	1.6	1.5		1.9	1.8	1.6	1.5		1.8	1.8	1.6	1.5		1.0	1.0	1.0	1.0							34.0
36.0	1.8	1.8	1.5	1.4		1.4	1.8	1.6	1.5		1.5	1.8	1.5	1.4		1.0	1.0	1.0	1.0							36.0
38.0	1.4	1.7	1.5	1.4		0.9	1.3	1.5	1.4		1.0	1.4	1.5	1.4			1.0	1.0	1.0							38.0
40.0	1.0	1.3	1.5	1.4				1.3	1.4			1.0	1.4	1.4				1.0	1.0							40.0
42.0		0.9	1.3										1.0	1.3					1.0							42.0
44.0			0.9																							44.0
46.0																										46.0
48.0																										48.0
50.0																										50.0
52.0																										52.0
54.0																										54.0
56.0																										56.0
58.0																										58.0
60.0																										60.0
64.0																										64.0
1	46	46	46	46	46	92	92	92	92	92	92	92	92	92	92	100	100	100	100	100						1
2	92	92	92	92	92	92	92	92	92	92	92	92	92	92	92	100	100	100	100	100						2
3	92	92	92	92	92	92	92	92	92	92	92	92	92	92	92	100	100	100	100	100						3
4	92	92	92	92	92	92	92	92	92	92	92	92	92	92	92	100	100	100	100	100						4
5	92	92	92	92	92	92	92	92	92	92	92	92	92	92	92	100	100	100	100	100						5
6	92	92	92	92	92	46	46	46	46	46	92	92	92	92	92	100	100	100	100	100						6
ID	28	28	28	28	28	39	39	39	39	39	29	29	29	29	29	19	19	19	19	19						ID
[DEG]	59~84.7	59~84.7	59~84.7	65~84.7	78~84.7	60~84.7	63~84.7	64~84.7	65~84.7	78~84.7	63~84.7	63~84.7	64~84.7	65~84.7	79~84.7	66~84.7	67~84.7	68~84.7	67~84.7	78~84.7						[DEG]
	1	1	1	1	1	1	1	1	1	1	1	1	1	1	1	1	1	1	1	1						
	8.7t	8.7t	8.7t	8.7t	8.7t	8.7t	8.7t	8.7t	8.7t	8.7t	8.7t	8.7t	8.7t	8.7t	8.7t	8.7t	8.7t	8.7t	8.7t	8.7t						

FLJ	1.6m + 7.4m	15.3 t	8.0m x 6.2m	360 °	JPN

m	11.4	11.4	11.4	11.4	11.4	15.1	15.1	15.1	15.1	15.1	15.1	15.1	15.1	15.1	15.1	15.1	15.1	15.1	15.1	15.1	18.8	18.8	18.8	18.8	18.8	m
°	5	15	30	45	60	5	15	30	45	60	5	15	30	45	60	5	15	30	45	60	5	15	30	45	60	°
3.0	7.3					7.3					7.3					7.3					7.3					3.0
3.5	7.3					7.3					7.3					7.3					7.3					3.5
4.0	7.3	7.3				7.3	7.3				7.3	7.3				7.3	7.3				7.3					4.0
4.5	7.3	7.3				7.3	7.3				7.3	7.3				7.3	7.3				7.3					4.5
5.0	7.3	7.3	7.3			7.3	7.3				7.3	7.3				7.3	7.3				7.3	7.3				5.0
6.0	7.3	7.3	7.3			7.3	7.3	7.3			7.3	7.3	7.3			7.3	7.3	7.3			7.3	7.3	7.3			6.0
7.0	7.3	7.3	7.3	6.5	5.0	7.3	7.3	7.3	6.7		7.3	7.3	7.3	6.7		7.3	7.3	7.3	6.7		7.3	7.3	7.3			7.0
8.0	7.3	7.3	7.3	6.3	4.9	7.3	7.3	7.3	6.5	5.0	7.3	7.3	7.3	6.5	5.0	7.3	7.3	7.3	6.5	5.0	7.3	7.3	7.3	6.6	5.0	8.0
9.0	7.3	7.3	7.2	6.0		7.3	7.3	7.3	6.3	4.9	7.3	7.3	7.3	6.3	4.9	7.3	7.3	7.3	6.3	4.9	7.3	7.3	7.3	6.4	4.9	9.0
10.0	7.3	7.3	6.9	5.9		7.3	7.3	7.3	6.1		7.3	7.3	7.3	6.1		7.3	7.3	7.3	6.1		7.3	7.3	7.3	6.3	4.9	10.0
11.0	7.3	7.3	6.6	5.7		7.3	7.3	7.0	5.9		7.3	7.3	7.0	5.9		7.3	7.3	7.0	5.9		7.3	7.3	7.3	6.1		11.0
12.0	7.3	7.0	6.3			7.3	7.3	6.8	5.8		7.3	7.3	6.8	5.8		7.3	7.3	6.8	5.8		7.3	7.3	7.2	6.0		12.0
14.0	6.4	6.2	5.9			7.3	7.1	6.3			7.3	7.1	6.3			7.3	7.1	6.3			7.3	7.3	6.7	5.7		14.0
16.0	5.7	5.7				6.8	6.4	5.9			6.8	6.4	5.9			6.8	6.4	5.9			7.3	7.1	6.3			16.0
18.0						6.0	5.9				6.0	5.9				6.0	5.9				7.0	6.6	6.0			18.0
20.0						5.5					5.5					5.5					6.3	6.1				20.0
22.0																					5.8	5.7				22.0
24.0																					5.0					24.0
26.0																										26.0
28.0																										28.0
30.0																										30.0
32.0																										32.0
34.0																										34.0
36.0																										36.0
38.0																										38.0
40.0																										40.0
42.0																										42.0
44.0																										44.0
46.0																										46.0
48.0																										48.0
50.0																										50.0
52.0																										52.0
54.0																										54.0
56.0																										56.0
58.0																										58.0
60.0																										60.0
64.0																										64.0
1	0	0	0	0	0	0	0	0	0	0	0	0	0	0	0	0	0	0	0	0	0	0	0	0	0	1
2	0	0	0	0	0	0	0	0	0	0	0	0	0	0	0	46	46	46	46	46	0	0	0	0	0	2
3	0	0	0	0	0	0	0	0	0	0	46	46	46	46	46	0	0	0	0	0	0	0	0	0	0	3
4	0	0	0	0	0	46	46	46	46	46	0	0	0	0	0	0	0	0	0	0	0	0	0	0	0	4
5	0	0	0	0	0	0	0	0	0	0	0	0	0	0	0	0	0	0	0	0	46	46	46	46	46	5
6	0	0	0	0	0	0	0	0	0	0	0	0	0	0	0	0	0	0	0	0	46	46	46	46	46	6
ID	1	1	1	1	1	76	76	76	76	76	105	105	105	105	105	131	131	131	131	131	30	30	30	30	30	ID
[DEG]	0~84.7	0~84.7	0~84.7	0~84.7	0~84.7	24~84.7	37~84.7	48~84.7	64~84.7	75~84.7	24~84.7	37~84.7	48~84.7	64~84.7	75~84.7	24~84.7	37~84.7	48~84.7	64~84.7	75~84.7	21~84.7	34~84.7	50~84.7	63~84.7	75~84.7	[DEG]
	1	1	1	1	1	1	1	1	1	1	1	1	1	1	1	1	1	1	1	1	1	1	1	1	1	
	8.7t	8.7t	8.7t	8.7t	8.7t	8.7t	8.7t	8.7t	8.7t	8.7t	8.7t	8.7t	8.7t	8.7t	8.7t	8.7t	8.7t	8.7t	8.7t	8.7t	8.7t	8.7t	8.7t	8.7t	8.7t	

フルオートラフィングジブ

FLJ	1.6m + 7.4m	15.3 t	8.0m x 6.2m	360 °	JPN

m	18.8	18.8	18.8	18.8	18.8	18.8	18.8	18.8	18.8	18.8	18.8	18.8	18.8	18.8	18.8	22.6	22.6	22.6	22.6	22.6	26.3	26.3	26.3	26.3	26.3	m
°	5	15	30	45	60	5	15	30	45	60	5	15	30	45	60	5	15	30	45	60	5	15	30	45	60	°
3.0	7.3					7.3					7.3															3.0
3.5	7.3					7.3					7.3															3.5
4.0	7.3					7.3	7.3				7.3	7.3				7.3										4.0
4.5	7.3					7.3	7.3				7.3	7.3				7.3										4.5
5.0	7.3	7.3				7.3	7.3				7.3	7.3				7.3	7.3				7.3					5.0
6.0	7.3	7.3	7.3			7.3	7.3	7.3			7.3	7.3	7.3			7.3	7.3				7.3	7.3				6.0
7.0	7.3	7.3	7.3	6.9		7.3	7.3	7.3	6.9		7.3	7.3	7.3	6.9		7.3	7.3	7.3			7.3	7.3				7.0
8.0	7.3	7.3	7.3	6.6	5.0	7.3	7.3	7.3	6.6	5.0	7.3	7.3	7.3	6.6	5.0	7.3	7.3	7.3	6.8		7.3	7.3	7.3			8.0
9.0	7.3	7.3	7.3	6.4	4.9	7.3	7.3	7.3	6.4	4.9	7.3	7.3	7.3	6.4	4.9	7.3	7.3	7.3	6.6	5.0	7.3	7.3	7.3	6.7	5.0	9.0
10.0	7.3	7.3	7.3	6.3	4.9	7.3	7.3	7.3	6.3	4.9	7.3	7.3	7.3	6.3	4.9	7.3	7.3	7.3	6.4	4.9	7.3	7.3	7.3	6.5	4.9	10.0
11.0	7.3	7.3	7.3	6.1		7.3	7.3	7.3	6.1		7.3	7.3	7.3	6.1		7.3	7.3	7.3	6.3	4.8	7.3	7.3	7.3	6.4	4.9	11.0
12.0	7.3	7.3	7.2	6.0		7.3	7.3	7.2	6.0		7.3	7.3	7.2	6.0		7.3	7.3	7.3	6.1		7.3	7.3	7.3	6.3	4.8	12.0
14.0	7.3	7.3	6.7	5.7		7.3	7.3	6.7	5.7		7.3	7.3	6.7	5.7		7.2	6.9	6.5	5.9		7.3	7.3	7.3	6.0		14.0
16.0	7.3	7.1	6.3			7.3	7.1	6.3			7.3	7.1	6.3			6.4	6.1	5.9	5.7		7.3	7.3	7.0	5.8		16.0
18.0	7.0	6.6	6.0			7.0	6.6	6.0			7.0	6.6	6.0			5.7	5.5	5.3			6.2	6.5	6.6	5.7		18.0
20.0	6.3	6.1				6.3	6.1				6.1	6.1				5.1	5.0	4.9			4.7	5.0	5.4			20.0
22.0	5.7	5.7				5.3	5.4				4.9	5.0				4.6	4.5	4.5			3.5	3.8	4.0			22.0
24.0	4.7					4.3					3.9					4.2	4.1				2.6	2.8	3.0			24.0
26.0																3.8	3.8				1.8	1.9				26.0
28.0																					1.1	1.2				28.0
30.0																										30.0
32.0																										32.0
34.0																										34.0
36.0																										36.0
38.0																										38.0
40.0																										40.0
42.0																										42.0
44.0																										44.0
46.0																										46.0
48.0																										48.0
50.0																										50.0
52.0																										52.0
54.0																										54.0
56.0																										56.0
58.0																										58.0
60.0																										60.0
64.0																										64.0
1	0	0	0	0	0	0	0	0	0	0	0	0	0	0	0	0	0	0	0	0	92	92	92	92	92	1
2	0	0	0	0	0	0	0	0	0	0	46	46	46	46	46	0	0	0	0	0	92	92	92	92	92	2
3	0	0	0	0	0	46	46	46	46	46	46	46	46	46	46	0	0	0	0	0	0	0	0	0	0	3
4	46	46	46	46	46	46	46	46	46	46	0	0	0	0	0	0	0	0	0	0	0	0	0	0	0	4
5	46	46	46	46	46	0	0	0	0	0	0	0	0	0	0	46	46	46	46	46	0	0	0	0	0	5
6	0	0	0	0	0	0	0	0	0	0	0	0	0	0	0	92	92	92	92	92	0	0	0	0	0	6
ID	58	58	58	58	58	88	88	88	88	88	113	113	113	113	113	20	20	20	20	20	134	134	134	134	134	ID
[DEG]	21~84.7	33~84.7	50~84.7	63~84.7	75~84.7	21~84.7	33~84.7	50~84.7	63~84.7	75~84.7	21~84.7	33~84.7	50~84.7	63~84.7	75~84.7	29~84.7	30~84.7	46~84.7	63~84.7	76~84.7	33~84.7	34~84.7	47~84.7	63~84.7	76~84.7	[DEG]
	1	1	1	1	1	1	1	1	1	1	1	1	1	1	1	1	1	1	1	1	1	1	1	1	1	
	8.7t	8.7t	8.7t	8.7t	8.7t	8.7t	8.7t	8.7t	8.7t	8.7t	8.7t	8.7t	8.7t	8.7t	8.7t	8.7t	8.7t	8.7t	8.7t	8.7t	8.7t	8.7t	8.7t	8.7t	8.7t	

m	30.0	30.0	30.0	30.0	30.0	30.0	30.0	30.0	30.0	30.0	33.7	33.7	33.7	33.7	33.7	37.4	37.4	37.4	37.4	37.4	37.4	37.4	37.4	37.4	37.4	m
°	5	15	30	45	60	5	15	30	45	60	5	15	30	45	60	5	15	30	45	60	5	15	30	45	60	°
3.0																										3.0
3.5																										3.5
4.0																										4.0
4.5																										4.5
5.0	7.3					7.3																				5.0
6.0	7.3	7.3				7.3	7.3				7.3															6.0
7.0	7.3	7.3				7.3	7.3				7.3	7.3				7.1					7.3					7.0
8.0	7.3	7.3	7.3			7.3	7.3	7.3			7.3	7.3				7.1	7.1				7.3	7.3				8.0
9.0	7.3	7.3	7.3			7.3	7.3	7.3	6.8		7.3	7.3	7.3			7.1	7.1				7.3	7.3				9.0
10.0	7.3	7.3	7.3	6.6	5.0	7.3	7.3	7.3	6.6	5.0	7.3	7.3	7.3	6.7		7.1	7.1	7.1			7.3	7.3	7.3			10.0
11.0	7.3	7.3	7.3	6.5	4.9	7.3	7.3	7.3	6.5	4.9	7.3	7.3	7.3	6.6	4.9	7.1	7.1	7.1	6.7	5.0	7.3	7.3	7.2	6.7		11.0
12.0	7.3	7.3	7.1	6.4	4.9	7.3	7.3	7.3	6.4	4.9	7.3	7.3	7.3	6.5	4.9	7.1	7.1	7.1	6.6	4.9	7.3	7.3	6.9	6.4	4.9	12.0
14.0	6.8	6.6	6.3	6.1		7.3	7.3	7.3	6.1		7.3	7.3	7.3	6.2	4.8	7.1	7.1	7.1	6.3	4.8	6.9	6.6	6.2	5.9	4.8	14.0
16.0	6.0	5.8	5.6	5.5		7.3	7.3	7.2	5.9		7.3	7.3	7.3	6.0		7.1	7.1	7.1	6.1		6.1	5.9	5.7	5.5		16.0
18.0	5.3	5.2	5.1	5.0		6.2	6.6	6.9	5.8		6.2	6.6	7.1	5.9		6.3	6.7	7.1	6.0		5.5	5.4	5.2	5.0		18.0
20.0	4.8	4.7	4.6	4.5		4.7	5.0	5.4	5.6		4.7	5.0	5.4	5.7		4.8	5.1	5.6	5.8		5.0	4.9	4.7	4.6		20.0
22.0	4.3	4.3	4.2			3.5	3.8	4.1			3.5	3.8	4.1	4.4		3.6	3.9	4.3	4.5		4.6	4.5	4.3	4.3		22.0
24.0	3.9	3.9	3.8			2.5	2.8	3.0			2.5	2.8	3.1			2.7	2.9	3.2	3.4		4.2	4.1	4.0	4.0		24.0
26.0	3.5	3.5	3.5			1.8	2.0	2.2			1.8	2.0	2.2			1.9	2.1	2.4			3.9	3.8	3.7			26.0
28.0	3.2	3.1				1.1	1.3				1.1	1.3	1.5			1.2	1.4	1.6			3.3	3.4	3.5			28.0
30.0	2.8	2.8																			2.7	2.8	2.9			30.0
32.0	2.4	2.5																			2.2	2.3	2.4			32.0
34.0	2.0																				1.7	1.8				34.0
36.0																					1.3	1.4				36.0
38.0																					1.0	1.1				38.0
40.0																										40.0
42.0																										42.0
44.0																										44.0
46.0																										46.0
48.0																										48.0
50.0																										50.0
52.0																										52.0
54.0																										54.0
56.0																										56.0
58.0																										58.0
60.0																										60.0
64.0																										64.0
1	0	0	0	0	0	92	92	92	92	92	92	92	92	92	92	92	92	92	92	92	0	0	0	0	0	1
2	0	0	0	0	0	92	92	92	92	92	92	92	92	92	92	92	92	92	92	92	0	0	0	0	0	2
3	0	0	0	0	0	46	46	46	46	46	92	92	92	92	92	92	92	92	92	92	46	46	46	46	46	3
4	46	46	46	46	46	0	0	0	0	0	0	0	0	0	0	46	46	46	46	46	92	92	92	92	92	4
5	92	92	92	92	92	0	0	0	0	0	0	0	0	0	0	0	0	0	0	0	92	92	92	92	92	5
6	92	92	92	92	92	0	0	0	0	0	0	0	0	0	0	0	0	0	0	0	92	92	92	92	92	6
ID	22	22	22	22	22	116	116	116	116	116	110	110	110	110	110	93	93	93	93	93	24	24	24	24	24	ID
[DEG]	24~84.7	32~84.7	50~84.7	63~84.7	78~84.7	41~84.7	43~84.7	49~84.7	63~84.7	78~84.7	47~84.7	49~84.7	50~84.7	62~84.7	76~84.7	52~84.7	53~84.7	55~84.7	62~84.7	78~84.7	33~84.7	34~84.7	48~84.7	63~84.7	78~84.7	[DEG]
	1	1	1	1	1	1	1	1	1	1	1	1	1	1	1	1	1	1	1	1	1	1	1	1	1	
	8.7t	8.7t	8.7t	8.7t	8.7t	8.7t	8.7t	8.7t	8.7t	8.7t	8.7t	8.7t	8.7t	8.7t	8.7t	8.7t	8.7t	8.7t	8.7t	8.7t	8.7t	8.7t	8.7t	8.7t	8.7t	

FLJ	1.6m + 7.4m	15.3 t	8.0m x 6.2m	360 °	JPN

m	41.2	41.2	41.2	41.2	41.2	44.9	44.9	44.9	44.9	44.9	44.9	44.9	44.9	44.9	44.9	48.6	48.6	48.6	48.6	48.6	48.6	48.6	48.6	48.6	48.6	m
°	5	15	30	45	60	5	15	30	45	60	5	15	30	45	60	5	15	30	45	60	5	15	30	45	60	°
3.0																										3.0
3.5																										3.5
4.0																										4.0
4.5																										4.5
5.0																										5.0
6.0																										6.0
7.0	7.3																									7.0
8.0	7.3										6.5															8.0
9.0	7.3	7.3				4.6					6.5					4.8					5.4					9.0
10.0	7.3	7.3	7.3			4.6	4.6				6.5	6.5				4.8					5.4					10.0
11.0	7.3	7.3	7.3			4.6	4.6				6.5	6.5	6.5			4.8	4.8				5.4	5.4				11.0
12.0	7.3	7.3	7.3	6.6	4.9	4.6	4.6	4.6			6.5	6.5	6.5			4.8	4.8	4.8			5.4	5.4	5.4			12.0
14.0	7.3	7.3	7.3	6.4	4.9	4.6	4.6	4.6	4.6	4.6	6.5	6.5	6.5	6.5	4.9	4.8	4.8	4.8	4.8	4.8	5.4	5.4	5.4	5.4	4.9	14.0
16.0	7.3	7.3	7.3	6.2		4.6	4.6	4.6	4.6	4.6	6.5	6.5	6.5	6.3	4.8	4.8	4.8	4.8	4.8	4.8	5.4	5.4	5.4	5.4	4.8	16.0
18.0	6.4	6.8	7.2	6.1		4.6	4.6	4.6	4.6		6.5	6.5	6.5	6.1		4.8	4.8	4.8	4.8		5.4	5.4	5.4	5.4		18.0
20.0	4.9	5.2	5.7	5.9		4.6	4.6	4.6	4.6		5.1	5.4	5.9	6.0		4.8	4.8	4.8	4.8		5.2	5.4	5.4	5.4		20.0
22.0	3.7	4.0	4.4	4.7		4.6	4.5	4.3	4.2		3.9	4.2	4.6	4.9		4.6	4.8	4.8	4.7		4.0	4.3	4.7	5.0		22.0
24.0	2.8	3.0	3.3	3.6		4.3	4.2	4.0	4.0		2.9	3.2	3.5	3.8		3.6	3.9	4.2	4.4		3.1	3.3	3.7	3.9		24.0
26.0	2.0	2.2	2.5	2.7		3.5	3.7	3.8	3.7		2.1	2.4	2.6	2.8		2.8	3.0	3.3	3.5		2.3	2.5	2.8	3.0		26.0
28.0		1.5	1.7			2.8	3.0	3.2	3.3			1.7	1.9	2.1		2.1	2.3	2.6	2.7			1.8	2.1	2.2		28.0
30.0						2.3	2.4	2.6								1.6	1.7	1.9	2.1							30.0
32.0						1.8	1.9	2.0										1.4								32.0
34.0						1.3	1.4	1.6																		34.0
36.0						0.9	1.0	1.1																		36.0
38.0																										38.0
40.0																										40.0
42.0																										42.0
44.0																										44.0
46.0																										46.0
48.0																										48.0
50.0																										50.0
52.0																										52.0
54.0																										54.0
56.0																										56.0
58.0																										58.0
60.0																										60.0
64.0																										64.0
1	92	92	92	92	92	0	0	0	0	0	92	92	92	92	92	46	46	46	46	46	92	92	92	92	92	1
2	92	92	92	92	92	46	46	46	46	46	92	92	92	92	92	92	92	92	92	92	92	92	92	92	92	2
3	92	92	92	92	92	92	92	92	92	92	92	92	92	92	92	92	92	92	92	92	92	92	92	92	92	3
4	92	92	92	92	92	92	92	92	92	92	92	92	92	92	92	92	92	92	92	92	92	92	92	92	92	4
5	0	0	0	0	0	92	92	92	92	92	46	46	46	46	46	92	92	92	92	92	92	92	92	92	92	5
6	0	0	0	0	0	92	92	92	92	92	0	0	0	0	0	46	46	46	46	46	0	0	0	0	0	6
ID	83	83	83	83	83	26	26	26	26	26	65	65	65	65	65	38	38	38	38	38	49	49	49	49	49	ID
[DEG]	58~84.7	57~84.7	58~84.7	62~84.7	79~84.7	48~84.7	49~84.7	50~84.7	63~84.7	78~84.7	61~84.7	60~84.7	61~84.7	62~84.7	78~84.7	59~84.7	60~84.7	59~84.7	62~84.7	79~84.7	64~84.7	63~84.7	64~84.7	65~84.7	79~84.7	[DEG]
	1	1	1	1	1	1	1	1	1	1	1	1	1	1	1	1	1	1	1	1	1	1	1	1	1	
	8.7t	8.7t	8.7t	8.7t	8.7t	8.7t	8.7t	8.7t	8.7t	8.7t	8.7t	8.7t	8.7t	8.7t	8.7t	8.7t	8.7t	8.7t	8.7t	8.7t	8.7t	8.7t	8.7t	8.7t	8.7t	

m	52.3	52.3	52.3	52.3	52.3	52.3	52.3	52.3	52.3	52.3	56.0	56.0	56.0	56.0	56.0	60.0	60.0	60.0	60.0	60.0						m
°	5	15	30	45	60	5	15	30	45	60	5	15	30	45	60	5	15	30	45	60						°
3.0																										3.0
3.5																										3.5
4.0																										4.0
4.5																										4.5
5.0																										5.0
6.0																										6.0
7.0																										7.0
8.0																										8.0
9.0																										9.0
10.0	3.9					4.4																				10.0
11.0	3.9					4.4					3.7															11.0
12.0	3.9	3.9				4.4	4.4				3.7															12.0
14.0	3.9	3.9	3.9			4.4	4.4	4.4			3.7	3.7	3.7			3.2	3.2									14.0
16.0	3.9	3.9	3.9	3.9	3.9	4.4	4.4	4.4	4.4	4.4	3.7	3.7	3.7	3.7	3.7	3.2	3.2	3.2	3.2							16.0
18.0	3.9	3.9	3.9	3.9	3.9	4.4	4.4	4.4	4.4	4.4	3.7	3.7	3.7	3.7	3.7	3.2	3.2	3.2	3.2	3.2						18.0
20.0	3.9	3.9	3.9	3.9		4.4	4.4	4.4	4.4		3.7	3.7	3.7	3.7		3.2	3.2	3.2	3.2	3.2						20.0
22.0	3.9	3.9	3.9	3.9		4.2	4.4	4.4	4.4		3.7	3.7	3.7	3.7		3.2	3.2	3.2	3.2							22.0
24.0	3.8	3.9	3.9	3.9		3.3	3.5	3.9	4.1		3.4	3.7	3.7	3.7		3.2	3.2	3.2	3.2							24.0
26.0	3.0	3.2	3.5	3.6		2.5	2.7	3.0	3.2		2.6	2.9	3.1	3.4		2.6	2.8	3.1	3.2							26.0
28.0	2.3	2.5	2.7	2.9			2.0	2.3	2.4			2.2	2.4	2.6				2.4	2.6							28.0
30.0	1.7	1.9	2.1	2.2					1.8					2.0												30.0
32.0			1.6																							32.0
34.0																										34.0
36.0																										36.0
38.0																										38.0
40.0																										40.0
42.0																										42.0
44.0																										44.0
46.0																										46.0
48.0																										48.0
50.0																										50.0
52.0																										52.0
54.0																										54.0
56.0																										56.0
58.0																										58.0
60.0																										60.0
64.0																										64.0
1	46	46	46	46	46	92	92	92	92	92	92	92	92	92	92	100	100	100	100	100						1
2	92	92	92	92	92	92	92	92	92	92	92	92	92	92	92	100	100	100	100	100						2
3	92	92	92	92	92	92	92	92	92	92	92	92	92	92	92	100	100	100	100	100						3
4	92	92	92	92	92	92	92	92	92	92	92	92	92	92	92	100	100	100	100	100						4
5	92	92	92	92	92	92	92	92	92	92	92	92	92	92	92	100	100	100	100	100						5
6	92	92	92	92	92	46	46	46	46	46	92	92	92	92	92	100	100	100	100	100						6
ID	28	28	28	28	28	39	39	39	39	39	29	29	29	29	29	19	19	19	19	19						ID
[DEG]	62~84.7	63~84.7	62~84.7	65~84.7	78~84.7	66~84.7	65~84.7	66~84.7	65~84.7	78~84.7	68~84.7	67~84.7	68~84.7	67~84.7	79~84.7	70~84.7	71~84.7	70~84.7	71~84.7	79~84.7						[DEG]
	1	1	1	1	1	1	1	1	1	1	1	1	1	1	1	1	1	1	1	1						
	8.7t	8.7t	8.7t	8.7t	8.7t	8.7t	8.7t	8.7t	8.7t	8.7t	8.7t	8.7t	8.7t	8.7t	8.7t	8.7t	8.7t	8.7t	8.7t	8.7t						

フルオートラフィングジブ

FLJ	1.6m + 12.4m	15.3 t	8.0m x 6.2m	360 °	JPN

m	11.4	11.4	11.4	11.4	11.4	15.1	15.1	15.1	15.1	15.1	15.1	15.1	15.1	15.1	15.1	15.1	15.1	15.1	15.1	15.1	18.8	18.8	18.8	18.8	18.8	m
°	5	15	30	45	60	5	15	30	45	60	5	15	30	45	60	5	15	30	45	60	5	15	30	45	60	°
3.0	4.3																									3.0
3.5	4.3																									3.5
4.0	4.3					4.3					4.3					4.3					4.3					4.0
4.5	4.3					4.3					4.3					4.3					4.3					4.5
5.0	4.3					4.3					4.3					4.3					4.3					5.0
6.0	4.3	4.3				4.3	4.3				4.3	4.3				4.3	4.3				4.3					6.0
7.0	4.3	4.3				4.3	4.3				4.3	4.3				4.3	4.3				4.3	4.3				7.0
8.0	4.3	4.3				4.3	4.3				4.3	4.3				4.3	4.3				4.3	4.3				8.0
9.0	4.3	4.3	4.3			4.3	4.3	4.3			4.3	4.3	4.3			4.3	4.3	4.3			4.3	4.3				9.0
10.0	4.3	4.3	4.1			4.3	4.3	4.3			4.3	4.3	4.3			4.3	4.3	4.3			4.3	4.3	4.3			10.0
11.0	4.3	4.3	3.9	3.2		4.3	4.3	4.1	3.3		4.3	4.3	4.1	3.3		4.3	4.3	4.1	3.3		4.3	4.3	4.1			11.0
12.0	4.3	4.3	3.7	3.1		4.3	4.3	3.9	3.2		4.3	4.3	3.9	3.2		4.3	4.3	3.9	3.2		4.3	4.3	3.9	3.3		12.0
14.0	4.3	4.0	3.3	2.9		4.3	4.3	3.5	3.0		4.3	4.3	3.5	3.0		4.3	4.3	3.5	3.0		4.3	4.3	3.7	3.1		14.0
16.0	3.8	3.5	3.0	2.7		4.3	3.9	3.3	2.8		4.3	3.9	3.3	2.8		4.3	3.9	3.3	2.8		4.3	4.1	3.4	2.9		16.0
18.0	3.4	3.2	2.8			3.9	3.6	3.0	2.7		3.9	3.6	3.0	2.7		3.9	3.6	3.0	2.7		4.3	3.8	3.2	2.8		18.0
20.0	3.0	2.9				3.5	3.3	2.9			3.5	3.3	2.9			3.5	3.3	2.9			4.0	3.5	3.0	2.7		20.0
22.0	2.7					3.2	3.0				3.2	3.0				3.2	3.0				3.6	3.3	2.9			22.0
24.0						2.9	2.8				2.9	2.8				2.9	2.8				3.3	3.1	2.8			24.0
26.0																					3.0	2.9				26.0
28.0																					2.8					28.0
30.0																										30.0
32.0																										32.0
34.0																										34.0
36.0																										36.0
38.0																										38.0
40.0																										40.0
42.0																										42.0
44.0																										44.0
46.0																										46.0
48.0																										48.0
50.0																										50.0
52.0																										52.0
54.0																										54.0
56.0																										56.0
58.0																										58.0
60.0																										60.0
64.0																										64.0
1	0	0	0	0		0	0	0	0		0	0	0	0		0	0	0	0		0	0	0	0		1
2	0	0	0	0		0	0	0	0		0	0	0	0		46	46	46	46		0	0	0	0		2
3	0	0	0	0		0	0	0	0		46	46	46	46		0	0	0	0		0	0	0	0		3
4	0	0	0	0		46	46	46	46		0	0	0	0		0	0	0	0		0	0	0	0		4
5	0	0	0	0		0	0	0	0		0	0	0	0		0	0	0	0		46	46	46	46		5
6	0	0	0	0		0	0	0	0		0	0	0	0		0	0	0	0		46	46	46	46		6
ID	1	1	1	1		76	76	76	76		105	105	105	105		131	131	131	131		30	30	30	30		ID
[DEG]	0~84.7	0~84.7	0~84.7	0~84.7		29~84.7	32~84.7	51~84.7	60~84.7		29~84.7	31~84.7	51~84.7	60~84.7		29~84.7	31~84.7	51~84.7	60~84.7		26~84.7	37~84.7	46~84.7	60~84.7		[DEG]
	1	1	1	1		1	1	1	1		1	1	1	1		1	1	1	1		1	1	1	1		
	8.7t	8.7t	8.7t	8.7t		8.7t	8.7t	8.7t	8.7t		8.7t	8.7t	8.7t	8.7t		8.7t	8.7t	8.7t	8.7t		8.7t	8.7t	8.7t	8.7t		

m	18.8	18.8	18.8	18.8	18.8	18.8	18.8	18.8	18.8	18.8	18.8	18.8	18.8	18.8	18.8	22.6	22.6	22.6	22.6	22.6	26.3	26.3	26.3	26.3	26.3	m
°	5	15	30	45	60	5	15	30	45	60	5	15	30	45	60	5	15	30	45	60	5	15	30	45	60	°
3.0																										3.0
3.5																										3.5
4.0	4.3					4.3					4.3															4.0
4.5	4.3					4.3					4.3															4.5
5.0	4.3					4.3					4.3					4.3										5.0
6.0	4.3					4.3					4.3					4.3					4.3					6.0
7.0	4.3	4.3				4.3	4.3				4.3	4.3				4.3	4.3				4.3					7.0
8.0	4.3	4.3				4.3	4.3				4.3	4.3				4.3	4.3				4.3	4.3				8.0
9.0	4.3	4.3				4.3	4.3				4.3	4.3				4.3	4.3				4.3	4.3				9.0
10.0	4.3	4.3	4.3			4.3	4.3	4.3			4.3	4.3	4.3			4.3	4.3				4.3	4.3				10.0
11.0	4.3	4.3	4.1			4.3	4.3	4.2			4.3	4.3	4.2			4.3	4.3	4.1			4.3	4.3	4.3			11.0
12.0	4.3	4.3	4.0	3.3		4.3	4.3	4.0	3.3		4.3	4.3	4.0	3.3		4.3	4.3	4.0			4.3	4.3	4.2			12.0
14.0	4.3	4.3	3.7	3.1		4.3	4.3	3.7	3.1		4.3	4.3	3.7	3.1		4.3	4.3	3.7	3.1		4.3	4.3	3.9	3.2	2.7	14.0
16.0	4.3	4.1	3.5	2.9		4.3	4.2	3.5	2.9		4.3	4.2	3.5	2.9		4.3	4.2	3.5	3.0		4.3	4.3	3.7	3.0	2.6	16.0
18.0	4.3	3.8	3.2	2.8		4.3	3.8	3.2	2.8		4.3	3.9	3.2	2.8		4.3	3.9	3.3	2.9		4.3	4.2	3.5	2.9		18.0
20.0	4.0	3.6	3.0	2.7		4.0	3.6	3.0	2.7		4.0	3.6	3.0	2.7		4.2	3.7	3.1	2.8		4.3	4.0	3.3	2.8		20.0
22.0	3.6	3.3	2.9			3.6	3.3	2.9			3.6	3.3	2.9			3.9	3.4	3.0			4.3	3.7	3.2	2.7		22.0
24.0	3.3	3.1	2.8			3.3	3.1	2.8			3.3	3.1	2.8			3.6	3.3	2.9			3.5	3.5	3.0			24.0
26.0	3.0	2.9				3.0	2.9				3.0	2.9				3.4	3.1	2.8			2.7	3.0	2.9			26.0
28.0	2.8					2.8					2.8					3.2	3.0				2.0	2.3	2.6			28.0
30.0																2.9	2.8				1.5	1.7				30.0
32.0																2.7					1.0	1.1				32.0
34.0																										34.0
36.0																										36.0
38.0																										38.0
40.0																										40.0
42.0																										42.0
44.0																										44.0
46.0																										46.0
48.0																										48.0
50.0																										50.0
52.0																										52.0
54.0																										54.0
56.0																										56.0
58.0																										58.0
60.0																										60.0
64.0																										64.0
1	0	0	0	0		0	0	0	0		0	0	0	0		0	0	0	0		92	92	92	92	92	1
2	0	0	0	0		0	0	0	0		46	46	46	46		0	0	0	0		92	92	92	92	92	2
3	0	0	0	0		46	46	46	46		46	46	46	46		0	0	0	0		0	0	0	0	0	3
4	46	46	46	46		46	46	46	46		0	0	0	0		0	0	0	0		0	0	0	0	0	4
5	46	46	46	46		0	0	0	0		0	0	0	0		46	46	46	46		0	0	0	0	0	5
6	0	0	0	0		0	0	0	0		0	0	0	0		92	92	92	92		0	0	0	0	0	6
ID	58	58	58	58		88	88	88	88		113	113	113	113		20	20	20	20		134	134	134	134	134	ID
[DEG]	26~84.7	37~84.7	46~84.7	60~84.7		26~84.7	37~84.7	46~84.7	60~84.7		26~84.7	37~84.7	46~84.7	60~84.7		24~84.7	34~84.7	49~84.7	65~84.7		34~84.7	37~84.7	50~84.7	64~84.7	77~84.7	[DEG]
	1	1	1	1		1	1	1	1		1	1	1	1		1	1	1	1		1	1	1	1	1	
	8.7t	8.7t	8.7t	8.7t		8.7t	8.7t	8.7t	8.7t		8.7t	8.7t	8.7t	8.7t		8.7t	8.7t	8.7t	8.7t		8.7t	8.7t	8.7t	8.7t	8.7t	

FLJ	1.6m + 12.4m	15.3 t	8.0m x 6.2m	360 °	JPN

m	30.0	30.0	30.0	30.0	30.0	30.0	30.0	30.0	30.0	30.0	33.7	33.7	33.7	33.7	33.7	37.4	37.4	37.4	37.4	37.4	37.4	37.4	37.4	37.4	37.4	m
°	5	15	30	45	60	5	15	30	45	60	5	15	30	45	60	5	15	30	45	60	5	15	30	45	60	°
3.0																										3.0
3.5																										3.5
4.0																										4.0
4.5																										4.5
5.0																										5.0
6.0	4.0					4.3																				6.0
7.0	4.0					4.3					4.3					4.1										7.0
8.0	4.0					4.3					4.3					4.1					4.3					8.0
9.0	4.0	4.0				4.3	4.3				4.3	4.3				4.1					4.3					9.0
10.0	4.0	4.0				4.3	4.3				4.3	4.3				4.1	4.1				4.3	4.3				10.0
11.0	4.0	4.0				4.3	4.3	4.3			4.3	4.3				4.1	4.1				4.3	4.3				11.0
12.0	4.0	4.0	4.0			4.3	4.3	4.2			4.3	4.3	4.2			4.1	4.1				4.3	4.3				12.0
14.0	4.0	4.0	3.7	3.2		4.3	4.3	3.9	3.2		4.3	4.3	3.9	3.3		4.1	4.1	3.9			4.3	4.3	3.7			14.0
16.0	4.0	4.0	3.5	3.1		4.3	4.3	3.7	3.1		4.3	4.3	3.7	3.2	2.6	4.1	4.1	3.7	3.2	2.6	4.3	4.3	3.5	3.1		16.0
18.0	4.0	4.0	3.4	3.0		4.3	4.3	3.5	3.0		4.3	4.3	3.6	3.0	2.6	4.1	4.1	3.6	3.1	2.6	4.3	4.1	3.4	3.0		18.0
20.0	4.0	3.8	3.2	2.9		4.3	4.1	3.4	2.9		4.3	4.1	3.4	2.9		4.1	4.1	3.4	3.0		4.3	3.9	3.2	2.9		20.0
22.0	4.0	3.6	3.1	2.8		4.3	3.8	3.2	2.8		4.3	3.9	3.3	2.8		4.1	3.9	3.3	2.9		4.2	3.7	3.1	2.8		22.0
24.0	3.7	3.4	3.0	2.7		3.4	3.6	3.1	2.7		3.4	3.7	3.1	2.8		3.4	3.8	3.2	2.8		3.9	3.5	3.0	2.7		24.0
26.0	3.4	3.3	2.9			2.6	3.0	3.0			2.6	2.9	3.0	2.7		2.6	3.0	3.0	2.7		3.6	3.4	2.9	2.7		26.0
28.0	3.1	3.1	2.8			2.0	2.2	2.6			1.9	2.2	2.6			1.9	2.3	2.7	2.7		3.3	3.2	2.8	2.6		28.0
30.0	2.8	2.8	2.7			1.4	1.6	1.9			1.3	1.6	1.9			1.4	1.7	2.0			3.1	3.0	2.7			30.0
32.0	2.5	2.5	2.5			0.9	1.1	1.3				1.1	1.3				1.1	1.4			2.7	2.8	2.7			32.0
34.0	2.2	2.2																			2.2	2.4	2.6			34.0
36.0		2.0																			1.8	2.0	2.1			36.0
38.0																					1.5	1.6				38.0
40.0																					1.2	1.3				40.0
42.0																					0.9	1.0				42.0
44.0																										44.0
46.0																										46.0
48.0																										48.0
50.0																										50.0
52.0																										52.0
54.0																										54.0
56.0																										56.0
58.0																										58.0
60.0																										60.0
64.0																										64.0
1	0	0	0	0		92	92	92	92		92	92	92	92	92	92	92	92	92	92	0	0	0	0		1
2	0	0	0	0		92	92	92	92		92	92	92	92	92	92	92	92	92	92	0	0	0	0		2
3	0	0	0	0		46	46	46	46		92	92	92	92	92	92	92	92	92	92	46	46	46	46		3
4	46	46	46	46		0	0	0	0		0	0	0	0	0	46	46	46	46	46	92	92	92	92		4
5	92	92	92	92		0	0	0	0		0	0	0	0	0	0	0	0	0	0	92	92	92	92		5
6	92	92	92	92		0	0	0	0		0	0	0	0	0	0	0	0	0	0	92	92	92	92		6
ID	22	22	22	22		116	116	116	116		110	110	110	110	110	93	93	93	93	93	24	24	24	24		ID
[DEG]	39~84.7	36~84.7	47~84.7	64~84.7		42~84.7	44~84.7	46~84.7	64~84.7		51~84.7	49~84.7	52~84.7	64~84.7	77~84.7	54~84.7	53~84.7	56~84.7	64~84.7	79~84.7	34~84.7	36~84.7	50~84.7	64~84.7		[DEG]
	1	1	1	1		1	1	1	1		1	1	1	1	1	1	1	1	1	1	1	1	1	1		
	8.7t	8.7t	8.7t	8.7t		8.7t	8.7t	8.7t	8.7t		8.7t	8.7t	8.7t	8.7t	8.7t	8.7t	8.7t	8.7t	8.7t	8.7t	8.7t	8.7t	8.7t	8.7t		

m	41.2	41.2	41.2	41.2	41.2	44.9	44.9	44.9	44.9	44.9	44.9	44.9	44.9	44.9	44.9	48.6	48.6	48.6	48.6	48.6	48.6	48.6	48.6	48.6	48.6	m
°	5	15	30	45	60	5	15	30	45	60	5	15	30	45	60	5	15	30	45	60	5	15	30	45	60	°
3.0																										3.0
3.5																										3.5
4.0																										4.0
4.5																										4.5
5.0																										5.0
6.0																										6.0
7.0																										7.0
8.0	4.3																									8.0
9.0	4.3										4.0															9.0
10.0	4.3					3.0					4.0					3.2					3.6					10.0
11.0	4.3	4.3				3.0					4.0	4.0				3.2					3.6					11.0
12.0	4.3	4.3				3.0	3.0				4.0	4.0				3.2	3.2				3.6	3.6				12.0
14.0	4.3	4.3	3.9			3.0	3.0				4.0	4.0				3.2	3.2				3.6	3.6				14.0
16.0	4.3	4.3	3.7	3.2		3.0	3.0	3.0			4.0	4.0	3.7			3.2	3.2	3.2			3.6	3.6	3.6			16.0
18.0	4.3	4.3	3.5	3.1	2.6	3.0	3.0	3.0	2.9		4.0	4.0	3.5	3.0	2.6	3.2	3.2	3.2	3.0		3.6	3.6	3.5	3.0		18.0
20.0	4.3	4.1	3.4	3.0	2.6	3.0	3.0	3.0	2.9		4.0	4.0	3.4	2.9	2.6	3.2	3.2	3.2	2.9	2.6	3.6	3.6	3.3	2.9	2.6	20.0
22.0	4.3	4.0	3.3	2.9		3.0	3.0	3.0	2.8		4.0	3.9	3.2	2.9		3.2	3.2	3.2	2.8	2.5	3.6	3.6	3.2	2.8	2.5	22.0
24.0	3.5	3.8	3.2	2.8		3.0	3.0	3.0	2.7		3.6	3.7	3.1	2.8		3.2	3.2	3.1	2.7		3.6	3.6	3.1	2.8		24.0
26.0	2.7	3.0	3.0	2.7		3.0	3.0	2.9	2.6		2.8	3.2	3.0	2.7		3.2	3.2	3.0	2.7		2.9	3.3	3.0	2.7		26.0
28.0	2.0	2.3	2.8	2.7		3.0	3.0	2.8	2.6		2.1	2.4	2.9	2.7		2.7	3.0	2.9	2.6		2.2	2.5	2.9	2.6		28.0
30.0	1.4	1.7	2.1	2.4		2.7	3.0	2.7	2.5			1.8	2.2	2.5		2.1	2.4	2.7	2.6			1.9	2.3	2.6		30.0
32.0			1.5			2.2	2.4	2.7	2.5				1.6	1.9		1.6	1.8	2.2	2.4				1.7	2.0		32.0
34.0						1.8	2.0	2.2									1.4	1.7	1.9							34.0
36.0						1.4	1.6	1.8										1.2								36.0
38.0						1.1	1.2	1.4																		38.0
40.0							0.9	1.0																		40.0
42.0																										42.0
44.0																										44.0
46.0																										46.0
48.0																										48.0
50.0																										50.0
52.0																										52.0
54.0																										54.0
56.0																										56.0
58.0																										58.0
60.0																										60.0
64.0																										64.0
1	92	92	92	92	92	0	0	0	0		92	92	92	92	92	46	46	46	46	46	92	92	92	92	92	1
2	92	92	92	92	92	46	46	46	46		92	92	92	92	92	92	92	92	92	92	92	92	92	92	92	2
3	92	92	92	92	92	92	92	92	92		92	92	92	92	92	92	92	92	92	92	92	92	92	92	92	3
4	92	92	92	92	92	92	92	92	92		92	92	92	92	92	92	92	92	92	92	92	92	92	92	92	4
5	0	0	0	0	0	92	92	92	92		46	46	46	46	46	92	92	92	92	92	92	92	92	92	92	5
6	0	0	0	0	0	92	92	92	92		0	0	0	0	0	46	46	46	46	46	0	0	0	0	0	6
ID	83	83	83	83	83	26	26	26	26		65	65	65	65	65	38	38	38	38	38	49	49	49	49	49	ID
[DEG]	58~84.7	60~84.7	59~84.7	64~84.7	78~84.7	51~84.7	50~84.7	52~84.7	64~84.7		63~84.7	62~84.7	62~84.7	64~84.7	79~84.7	61~84.7	60~84.7	60~84.7	64~84.7	78~84.7	65~84.7	65~84.7	65~84.7	66~84.7	78~84.7	[DEG]
	1	1	1	1	1	1	1	1	1		1	1	1	1	1	1	1	1	1	1	1	1	1	1	1	
	8.7t	8.7t	8.7t	8.7t	8.7t	8.7t	8.7t	8.7t	8.7t		8.7t	8.7t	8.7t	8.7t	8.7t	8.7t	8.7t	8.7t	8.7t	8.7t	8.7t	8.7t	8.7t	8.7t	8.7t	

フルオートラフィングジブ

FLJ	1.6m + 12.4m	15.3 t	8.0m x 6.2m	360 °	JPN

m	52.3	52.3	52.3	52.3	52.3	52.3	52.3	52.3	52.3	52.3	56.0	56.0	56.0	56.0	56.0	60.0	60.0	60.0	60.0	60.0	m
°	5	15	30	45	60	5	15	30	45	60	5	15	30	45	60	5	15	30	45	60	°
3.0																					3.0
3.5																					3.5
4.0																					4.0
4.5																					4.5
5.0																					5.0
6.0																					6.0
7.0																					7.0
8.0																					8.0
9.0																					9.0
10.0																					10.0
11.0	2.7					3.0															11.0
12.0	2.7					3.0					2.6										12.0
14.0	2.7	2.7				3.0	3.0				2.6	2.6				1.9					14.0
16.0	2.7	2.7	2.7			3.0	3.0	3.0			2.6	2.6				1.9	1.9				16.0
18.0	2.7	2.7	2.7			3.0	3.0	3.0			2.6	2.6	2.6			1.9	1.9	1.9			18.0
20.0	2.7	2.7	2.7	2.7	2.6	3.0	3.0	3.0	2.9	2.6	2.6	2.6	2.6	2.6		1.9	1.9	1.9	1.9		20.0
22.0	2.7	2.7	2.7	2.7	2.5	3.0	3.0	3.0	2.8	2.5	2.6	2.6	2.6	2.6	2.5	1.9	1.9	1.9	1.9	1.9	22.0
24.0	2.7	2.7	2.7	2.7		3.0	3.0	3.0	2.7		2.6	2.6	2.6	2.6	2.5	1.9	1.9	1.9	1.9	1.9	24.0
26.0	2.7	2.7	2.7	2.6		3.0	3.0	3.0	2.7		2.6	2.6	2.6	2.6		1.9	1.9	1.9	1.9		26.0
28.0	2.7	2.7	2.7	2.6		2.3	2.7	2.9	2.6		2.5	2.6	2.6	2.6		1.9	1.9	1.9	1.9		28.0
30.0	2.2	2.5	2.7	2.5			2.1	2.5	2.5			2.2	2.6	2.5				1.9	1.9		30.0
32.0	1.7	2.0	2.3	2.5				1.9	2.2				2.0	2.3					1.9		32.0
34.0		1.5	1.8	2.0					1.6					1.8							34.0
36.0			1.4	1.5																	36.0
38.0																					38.0
40.0																					40.0
42.0																					42.0
44.0																					44.0
46.0																					46.0
48.0																					48.0
50.0																					50.0
52.0																					52.0
54.0																					54.0
56.0																					56.0
58.0																					58.0
60.0																					60.0
64.0																					64.0
1	46	46	46	46	46	92	92	92	92	92	92	92	92	92	92	100	100	100	100	100	1
2	92	92	92	92	92	92	92	92	92	92	92	92	92	92	92	100	100	100	100	100	2
3	92	92	92	92	92	92	92	92	92	92	92	92	92	92	92	100	100	100	100	100	3
4	92	92	92	92	92	92	92	92	92	92	92	92	92	92	92	100	100	100	100	100	4
5	92	92	92	92	92	92	92	92	92	92	92	92	92	92	92	100	100	100	100	100	5
6	92	92	92	92	92	46	46	46	46	46	92	92	92	92	92	100	100	100	100	100	6
ID	28	28	28	28	28	39	39	39	39	39	29	29	29	29	29	19	19	19	19	19	ID
[DEG]	63~84.7	63~84.7	63~84.7	64~84.7	79~84.7	67~84.7	67~84.7	67~84.7	66~84.7	79~84.7	69~84.7	69~84.7	69~84.7	68~84.7	79~84.7	70~84.7	72~84.7	72~84.7	72~84.7	79~84.7	[DEG]
	1	1	1	1	1	1	1	1	1	1	1	1	1	1	1	1	1	1	1	1	
	8.7t	8.7t	8.7t	8.7t	8.7t	8.7t	8.7t	8.7t	8.7t	8.7t	8.7t	8.7t	8.7t	8.7t	8.7t	8.7t	8.7t	8.7t	8.7t	8.7t	

FLJ	1.6m + 17.4m	15.3 t	8.0m x 6.2m	360 °	JPN

m	11.4	11.4	11.4	11.4	11.4	15.1	15.1	15.1	15.1	15.1	15.1	15.1	15.1	15.1	15.1	15.1	15.1	15.1	15.1	15.1	18.8	18.8	18.8	18.8	18.8	m
°	5	15	30	45	60	5	15	30	45	60	5	15	30	45	60	5	15	30	45	60	5	15	30	45	60	°
3.0																										3.0
3.5																										3.5
4.0																										4.0
4.5	3.3																									4.5
5.0	3.3					3.1					3.3					3.3										5.0
6.0	3.3					3.1					3.3					3.3					2.7					6.0
7.0	3.3					3.1					3.3					3.3					2.7					7.0
8.0	3.3	3.3				3.1					3.3					3.3					2.7					8.0
9.0	3.3	3.3				3.1	3.1				3.3	3.3				3.3	3.3				2.7	2.7				9.0
10.0	3.3	3.2				3.1	3.1				3.3	3.3				3.3	3.3				2.7	2.7				10.0
11.0	3.3	3.0				3.1	3.1				3.3	3.1				3.3	3.1				2.7	2.7				11.0
12.0	3.2	2.9	2.5			3.1	2.9				3.3	2.9				3.3	3.0				2.7	2.7				12.0
14.0	2.9	2.6	2.3			3.1	2.7	2.3			3.1	2.7	2.3			3.1	2.7	2.3			2.7	2.7	2.3			14.0
16.0	2.6	2.4	2.1	1.8		2.8	2.5	2.2	1.9		2.8	2.5	2.2	1.9		2.8	2.5	2.2	1.9		2.7	2.5	2.2			16.0
18.0	2.4	2.2	1.9	1.7		2.6	2.3	2.0	1.8		2.6	2.3	2.0	1.8		2.6	2.3	2.0	1.8		2.7	2.4	2.0	1.8		18.0
20.0	2.2	2.0	1.8	1.6		2.4	2.1	1.9	1.7		2.4	2.1	1.9	1.7		2.4	2.1	1.9	1.7		2.5	2.2	1.9	1.7		20.0
22.0	2.0	1.9	1.7			2.2	2.0	1.8	1.6		2.2	2.0	1.8	1.6		2.2	2.0	1.8	1.6		2.3	2.1	1.8	1.6		22.0
24.0	1.8	1.7				2.1	1.9	1.7			2.1	1.9	1.7			2.1	1.9	1.7			2.2	2.0	1.8	1.6		24.0
26.0	1.7	1.6				1.9	1.8	1.6			1.9	1.8	1.6			1.9	1.8	1.6			2.0	1.9	1.7			26.0
28.0						1.8	1.6				1.8	1.6				1.8	1.6				1.9	1.8	1.6			28.0
30.0						1.6					1.6					1.6					1.9	1.7				30.0
32.0																					1.7	1.6				32.0
34.0																					1.6					34.0
36.0																										36.0
38.0																										38.0
40.0																										40.0
42.0																										42.0
44.0																										44.0
46.0																										46.0
48.0																										48.0
50.0																										50.0
52.0																										52.0
54.0																										54.0
56.0																										56.0
58.0																										58.0
60.0																										60.0
64.0																										64.0
1	0	0	0	0		0	0	0	0		0	0	0	0		0	0	0	0		0	0	0	0		1
2	0	0	0	0		0	0	0	0		0	0	0	0		46	46	46	46		0	0	0	0		2
3	0	0	0	0		0	0	0	0		46	46	46	46		0	0	0	0		0	0	0	0		3
4	0	0	0	0		46	46	46	46		0	0	0	0		0	0	0	0		0	0	0	0		4
5	0	0	0	0		0	0	0	0		0	0	0	0		0	0	0	0		46	46	46	46		5
6	0	0	0	0		0	0	0	0		0	0	0	0		0	0	0	0		46	46	46	46		6
ID	1	1	1	1		76	76	76	76		105	105	105	105		131	131	131	131		30	30	30	30		ID
[DEG]	0~84.7	0~84.7	0~84.7	0~84.7		23~84.7	36~84.7	47~84.7	63~84.7		23~84.7	36~84.7	47~84.7	63~84.7		23~84.7	36~84.7	47~84.7	63~84.7		21~84.7	33~84.7	49~84.7	63~84.7		[DEG]
	1	1	1	1		1	1	1	1		1	1	1	1		1	1	1	1		1	1	1	1		
	8.7t	8.7t	8.7t	8.7t		8.7t	8.7t	8.7t	8.7t		8.7t	8.7t	8.7t	8.7t		8.7t	8.7t	8.7t	8.7t		8.7t	8.7t	8.7t	8.7t		

FLJ	1.6m + 17.4m	15.3 t	8.0m x 6.2m	360 °	JPN

m	18.8	18.8	18.8	18.8	18.8	18.8	18.8	18.8	18.8	18.8	18.8	18.8	18.8	18.8	18.8	22.6	22.6	22.6	22.6	22.6	26.3	26.3	26.3	26.3	26.3	m
°	5	15	30	45	60	5	15	30	45	60	5	15	30	45	60	5	15	30	45	60	5	15	30	45	60	°
3.0																										3.0
3.5																										3.5
4.0																										4.0
4.5																										4.5
5.0																										5.0
6.0	2.9					3.2					3.3					2.5										6.0
7.0	2.9					3.2					3.3					2.5					3.3					7.0
8.0	2.9					3.2					3.3					2.5					3.3					8.0
9.0	2.9	2.9				3.2	3.2				3.3	3.3				2.5					3.3					9.0
10.0	2.9	2.9				3.2	3.2				3.3	3.3				2.5	2.5				3.3	3.3				10.0
11.0	2.9	2.9				3.2	3.2				3.3	3.2				2.5	2.5				3.3	3.3				11.0
12.0	2.9	2.9				3.2	3.0				3.3	3.0				2.5	2.5				3.3	3.2				12.0
14.0	2.9	2.8	2.3			3.2	2.8	2.3			3.2	2.8	2.3			2.5	2.5	2.3			3.3	2.9	2.4			14.0
16.0	2.9	2.5	2.2	1.9		2.9	2.6	2.2	1.9		3.0	2.6	2.2	1.9		2.5	2.5	2.2			3.2	2.7	2.2			16.0
18.0	2.7	2.4	2.1	1.8		2.7	2.4	2.1	1.8		2.7	2.4	2.1	1.8		2.5	2.4	2.1	1.8		3.0	2.5	2.1	1.9		18.0
20.0	2.5	2.2	1.9	1.7		2.5	2.2	1.9	1.7		2.5	2.2	2.0	1.7		2.5	2.3	1.9	1.7		2.8	2.4	2.0	1.8		20.0
22.0	2.3	2.1	1.9	1.6		2.3	2.1	1.9	1.6		2.4	2.1	1.9	1.6		2.4	2.1	1.9	1.7		2.6	2.3	1.9	1.7		22.0
24.0	2.2	2.0	1.8	1.6		2.2	2.0	1.8	1.6		2.2	2.0	1.8	1.6		2.3	2.0	1.8	1.6		2.4	2.1	1.9	1.6		24.0
26.0	2.1	1.9	1.7			2.1	1.9	1.7			2.1	1.9	1.7			2.1	1.9	1.7	1.5		2.3	2.0	1.8	1.6		26.0
28.0	1.9	1.8	1.6			2.0	1.8	1.6			2.0	1.8	1.6			2.0	1.8	1.7			2.2	1.9	1.7	1.5		28.0
30.0	1.9	1.7				1.9	1.7				1.9	1.7				1.9	1.8	1.6			2.1	1.9	1.7			30.0
32.0	1.7	1.6				1.7	1.6				1.7	1.6				1.8	1.7				1.7	1.8	1.6			32.0
34.0	1.6					1.6					1.6					1.8	1.6				1.2	1.5	1.6			34.0
36.0																1.7						1.0				36.0
38.0																										38.0
40.0																										40.0
42.0																										42.0
44.0																										44.0
46.0																										46.0
48.0																										48.0
50.0																										50.0
52.0																										52.0
54.0																										54.0
56.0																										56.0
58.0																										58.0
60.0																										60.0
64.0																										64.0
1	0	0	0	0		0	0	0	0		0	0	0	0		0	0	0	0		92	92	92	92		1
2	0	0	0	0		0	0	0	0		46	46	46	46		0	0	0	0		92	92	92	92		2
3	0	0	0	0		46	46	46	46		46	46	46	46		0	0	0	0		0	0	0	0		3
4	46	46	46	46		46	46	46	46		0	0	0	0		0	0	0	0		0	0	0	0		4
5	46	46	46	46		0	0	0	0		0	0	0	0		46	46	46	46		0	0	0	0		5
6	0	0	0	0		0	0	0	0		0	0	0	0		92	92	92	92		0	0	0	0		6
ID	58	58	58	58		88	88	88	88		113	113	113	113		20	20	20	20		134	134	134	134		ID
[DEG]	21~84.7	32~84.7	49~84.7	63~84.7		21~84.7	32~84.7	49~84.7	63~84.7		20~84.7	32~84.7	49~84.7	63~84.7		28~84.7	37~84.7	51~84.7	63~84.7		41~84.7	39~84.7	47~84.7	62~84.7		[DEG]
	1	1	1	1		1	1	1	1		1	1	1	1		1	1	1	1		1	1	1	1		
	8.7t	8.7t	8.7t	8.7t		8.7t	8.7t	8.7t	8.7t		8.7t	8.7t	8.7t	8.7t		8.7t	8.7t	8.7t	8.7t		8.7t	8.7t	8.7t	8.7t		

m	30.0	30.0	30.0	30.0	30.0	30.0	30.0	30.0	30.0	30.0	33.7	33.7	33.7	33.7	33.7	37.4	37.4	37.4	37.4	37.4	37.4	37.4	37.4	37.4	37.4	m
°	5	15	30	45	60	5	15	30	45	60	5	15	30	45	60	5	15	30	45	60	5	15	30	45	60	°
3.0																										3.0
3.5																										3.5
4.0																										4.0
4.5																										4.5
5.0																										5.0
6.0																										6.0
7.0																										7.0
8.0	2.3					3.2					3.1															8.0
9.0	2.3					3.2					3.1					2.4					2.5					9.0
10.0	2.3					3.2					3.1					2.4					2.5					10.0
11.0	2.3	2.3				3.2	3.2				3.1					2.4					2.5					11.0
12.0	2.3	2.3				3.2	3.2				3.1	3.1				2.4	2.4				2.5					12.0
14.0	2.3	2.3				3.2	2.9				3.1	3.0				2.4	2.4				2.5	2.5				14.0
16.0	2.3	2.3	2.2			3.2	2.8	2.3			3.1	2.8	2.3			2.4	2.4	2.2			2.5	2.5				16.0
18.0	2.3	2.3	2.1			3.1	2.6	2.2	1.9		3.1	2.6	2.2			2.4	2.4	2.2			2.5	2.5	2.1			18.0
20.0	2.3	2.3	2.0	1.8		2.9	2.4	2.1	1.8	1.5	2.9	2.5	2.1	1.8		2.4	2.4	2.1	1.8		2.5	2.4	2.0	1.8		20.0
22.0	2.3	2.2	1.9	1.7		2.7	2.3	2.0	1.7	1.5	2.7	2.3	2.0	1.8		2.4	2.4	2.0	1.8	1.5	2.5	2.2	1.9	1.7	1.5	22.0
24.0	2.3	2.1	1.8	1.7		2.5	2.2	1.9	1.7		2.6	2.2	1.9	1.7		2.4	2.2	1.9	1.7	1.5	2.5	2.1	1.8	1.7	1.5	24.0
26.0	2.3	2.0	1.8	1.6		2.4	2.1	1.8	1.6		2.4	2.1	1.8	1.6		2.4	2.2	1.8	1.7		2.4	2.1	1.8	1.6		26.0
28.0	2.2	1.9	1.7	1.6		2.3	2.0	1.8	1.6		2.3	2.0	1.8	1.6		2.4	2.1	1.8	1.6		2.2	2.0	1.7	1.6		28.0
30.0	2.1	1.8	1.6	1.5		2.1	1.9	1.7	1.5		2.0	1.9	1.7	1.5		2.0	2.0	1.7	1.6		2.1	1.9	1.7	1.5		30.0
32.0	2.0	1.8	1.6			1.6	1.8	1.6			1.5	1.8	1.7	1.5		1.5	1.8	1.7	1.5		2.1	1.8	1.6	1.5		32.0
34.0	1.9	1.7	1.6			1.1	1.4	1.6			1.0	1.3	1.6				1.4	1.6	1.5		2.0	1.8	1.6	1.5		34.0
36.0		1.7	1.5				1.0	1.3				0.9	1.2					1.3			1.9	1.7	1.5			36.0
38.0		1.6																			1.8	1.7	1.5			38.0
40.0		1.6																			1.6	1.6	1.5			40.0
42.0		1.5																			1.3	1.4	1.4			42.0
44.0																						1.1				44.0
46.0																						0.9				46.0
48.0																										48.0
50.0																										50.0
52.0																										52.0
54.0																										54.0
56.0																										56.0
58.0																										58.0
60.0																										60.0
64.0																										64.0
1	0	0	0	0		92	92	92	92	92	92	92	92	92		92	92	92	92	92	0	0	0	0	0	1
2	0	0	0	0		92	92	92	92	92	92	92	92	92		92	92	92	92	92	0	0	0	0	0	2
3	0	0	0	0		46	46	46	46	46	92	92	92	92		92	92	92	92	92	46	46	46	46	46	3
4	46	46	46	46		0	0	0	0	0	0	0	0	0		46	46	46	46	46	92	92	92	92	92	4
5	92	92	92	92		0	0	0	0	0	0	0	0	0		0	0	0	0	0	92	92	92	92	92	5
6	92	92	92	92		0	0	0	0	0	0	0	0	0		0	0	0	0	0	92	92	92	92	92	6
ID	22	22	22	22		116	116	116	116	116	110	110	110	110		93	93	93	93	93	24	24	24	24	24	ID
[DEG]	48~84.7	33~84.7	49~84.7	63~84.7		46~84.7	45~84.7	49~84.7	62~84.7	77~84.7	51~84.7	50~84.7	53~84.7	62~84.7		57~84.7	57~84.7	57~84.7	62~84.7	77~84.7	44~84.7	38~84.7	48~84.7	63~84.7	78~84.7	[DEG]
	1	1	1	1		1	1	1	1	1	1	1	1	1		1	1	1	1	1	1	1	1	1	1	
	8.7t	8.7t	8.7t	8.7t		8.7t	8.7t	8.7t	8.7t	8.7t	8.7t	8.7t	8.7t	8.7t		8.7t	8.7t	8.7t	8.7t	8.7t	8.7t	8.7t	8.7t	8.7t	8.7t	

フルオートラフィングジブ

FLJ	1.6m + 17.4m	15.3 t	8.0m x 6.2m	360 °	JPN

m	41.2	41.2	41.2	41.2	41.2	44.9	44.9	44.9	44.9	44.9	44.9	44.9	44.9	44.9	44.9	48.6	48.6	48.6	48.6	48.6	48.6	48.6	48.6	48.6	48.6	m
°	5	15	30	45	60	5	15	30	45	60	5	15	30	45	60	5	15	30	45	60	5	15	30	45	60	°
3.0																										3.0
3.5																										3.5
4.0																										4.0
4.5																										4.5
5.0																										5.0
6.0																										6.0
7.0																										7.0
8.0																										8.0
9.0																										9.0
10.0	2.7										2.4															10.0
11.0	2.7					1.9					2.4					2.0					2.2					11.0
12.0	2.7					1.9					2.4					2.0					2.2					12.0
14.0	2.7	2.7				1.9	1.9				2.4	2.4				2.0	2.0				2.2	2.2				14.0
16.0	2.7	2.7				1.9	1.9				2.4	2.4				2.0	2.0				2.2	2.2				16.0
18.0	2.7	2.6	2.1			1.9	1.9	1.9			2.4	2.4	2.1			2.0	2.0				2.2	2.2				18.0
20.0	2.7	2.5	2.1	1.8		1.9	1.9	1.9			2.4	2.4	2.0			2.0	2.0	2.0			2.2	2.2	2.0			20.0
22.0	2.7	2.4	2.0	1.8	1.5	1.9	1.9	1.9	1.7		2.4	2.4	2.0	1.7		2.0	2.0	1.9	1.7		2.2	2.2	1.9	1.7		22.0
24.0	2.6	2.3	1.9	1.7	1.5	1.9	1.9	1.8	1.7	1.5	2.4	2.2	1.9	1.7	1.5	2.0	2.0	1.9	1.7	1.5	2.2	2.2	1.9	1.7	1.5	24.0
26.0	2.5	2.2	1.8	1.7		1.9	1.9	1.8	1.6	1.5	2.4	2.2	1.8	1.7	1.5	2.0	2.0	1.8	1.6	1.5	2.2	2.1	1.8	1.6	1.5	26.0
28.0	2.4	2.1	1.8	1.6		1.9	1.9	1.7	1.6		2.4	2.1	1.8	1.6		2.0	2.0	1.7	1.6		2.2	2.1	1.8	1.6		28.0
30.0	2.0	2.0	1.7	1.6		1.9	1.9	1.7	1.5		2.0	2.0	1.7	1.6		2.0	2.0	1.7	1.6		2.1	2.0	1.7	1.6		30.0
32.0	1.5	1.8	1.7	1.6		1.9	1.9	1.6	1.5		1.5	1.9	1.7	1.5		2.0	1.9	1.6	1.5		1.6	1.9	1.7	1.5		32.0
34.0		1.4	1.6	1.5		1.9	1.8	1.6	1.5			1.4	1.6	1.5		1.6	1.8	1.6	1.5				1.6	1.5		34.0
36.0			1.3	1.5		1.8	1.7	1.5	1.5				1.4	1.5			1.5	1.6	1.5				1.5	1.5		36.0
38.0						1.4	1.7	1.5										1.5	1.4					1.4		38.0
40.0						1.1	1.3	1.5																		40.0
42.0						0.9	1.0	1.3																		42.0
44.0								1.0																		44.0
46.0																										46.0
48.0																										48.0
50.0																										50.0
52.0																										52.0
54.0																										54.0
56.0																										56.0
58.0																										58.0
60.0																										60.0
64.0																										64.0
1	92	92	92	92	92	0	0	0	0	0	92	92	92	92	92	46	46	46	46	46	92	92	92	92	92	1
2	92	92	92	92	92	46	46	46	46	46	92	92	92	92	92	92	92	92	92	92	92	92	92	92	92	2
3	92	92	92	92	92	92	92	92	92	92	92	92	92	92	92	92	92	92	92	92	92	92	92	92	92	3
4	92	92	92	92	92	92	92	92	92	92	92	92	92	92	92	92	92	92	92	92	92	92	92	92	92	4
5	0	0	0	0	0	92	92	92	92	92	46	46	46	46	46	92	92	92	92	92	92	92	92	92	92	5
6	0	0	0	0	0	92	92	92	92	92	0	0	0	0	0	46	46	46	46	46	0	0	0	0	0	6
ID	83	83	83	83	83	26	26	26	26	26	65	65	65	65	65	38	38	38	38	38	49	49	49	49	49	ID
[DEG]	60~84.7	60~84.7	60~84.7	62~84.7	79~84.7	51~84.7	53~84.7	53~84.7	65~84.7	78~84.7	62~84.7	62~84.7	63~84.7	65~84.7	78~84.7	62~84.7	63~84.7	63~84.7	65~84.7	79~84.7	64~84.7	67~84.7	66~84.7	65~84.7	79~84.7	[DEG]
	1	1	1	1	1	1	1	1	1	1	1	1	1	1	1	1	1	1	1	1	1	1	1	1	1	
	8.7t	8.7t	8.7t	8.7t	8.7t	8.7t	8.7t	8.7t	8.7t	8.7t	8.7t	8.7t	8.7t	8.7t	8.7t	8.7t	8.7t	8.7t	8.7t	8.7t	8.7t	8.7t	8.7t	8.7t	8.7t	

m	52.3	52.3	52.3	52.3	52.3	52.3	52.3	52.3	52.3	52.3	56.0	56.0	56.0	56.0	56.0	60.0	60.0	60.0	60.0	60.0						m
°	5	15	30	45	60	5	15	30	45	60	5	15	30	45	60	5	15	30	45	60						°
3.0																										3.0
3.5																										3.5
4.0																										4.0
4.5																										4.5
5.0																										5.0
6.0																										6.0
7.0																										7.0
8.0																										8.0
9.0																										9.0
10.0																										10.0
11.0																										11.0
12.0						2.0																				12.0
14.0	1.8					2.0					1.8															14.0
16.0	1.8	1.8				2.0	2.0				1.8	1.8				1.0										16.0
18.0	1.8	1.8				2.0	2.0				1.8	1.8				1.0	1.0									18.0
20.0	1.8	1.8	1.8			2.0	2.0	2.0			1.8	1.8				1.0	1.0									20.0
22.0	1.8	1.8	1.8			2.0	2.0	1.9			1.8	1.8	1.8			1.0	1.0	1.0								22.0
24.0	1.8	1.8	1.8	1.6		2.0	2.0	1.9	1.7		1.8	1.8	1.8	1.6		1.0	1.0	1.0								24.0
26.0	1.8	1.8	1.8	1.6	1.5	2.0	2.0	1.8	1.6	1.5	1.8	1.8	1.8	1.6	1.5	1.0	1.0	1.0	1.0							26.0
28.0	1.8	1.8	1.7	1.6	1.4	2.0	2.0	1.7	1.6	1.4	1.8	1.8	1.7	1.6	1.4	1.0	1.0	1.0	1.0	1.0						28.0
30.0	1.8	1.8	1.7	1.5		2.0	2.0	1.7	1.5		1.8	1.8	1.7	1.5		1.0	1.0	1.0	1.0	1.0						30.0
32.0	1.8	1.8	1.6	1.5			1.9	1.6	1.5			1.8	1.6	1.5			1.0	1.0	1.0							32.0
34.0	1.7	1.8	1.6	1.5				1.6	1.5				1.6	1.5				1.0	1.0							34.0
36.0		1.6	1.5	1.4				1.6	1.5				1.5	1.4					1.0							36.0
38.0			1.5	1.4					1.4					1.4												38.0
40.0				1.4																						40.0
42.0																										42.0
44.0																										44.0
46.0																										46.0
48.0																										48.0
50.0																										50.0
52.0																										52.0
54.0																										54.0
56.0																										56.0
58.0																										58.0
60.0																										60.0
64.0																										64.0
1	46	46	46	46	46	92	92	92	92	92	92	92	92	92	92	100	100	100	100	100						1
2	92	92	92	92	92	92	92	92	92	92	92	92	92	92	92	100	100	100	100	100						2
3	92	92	92	92	92	92	92	92	92	92	92	92	92	92	92	100	100	100	100	100						3
4	92	92	92	92	92	92	92	92	92	92	92	92	92	92	92	100	100	100	100	100						4
5	92	92	92	92	92	92	92	92	92	92	92	92	92	92	92	100	100	100	100	100						5
6	92	92	92	92	92	46	46	46	46	46	92	92	92	92	92	100	100	100	100	100						6
ID	28	28	28	28	28	39	39	39	39	39	29	29	29	29	29	19	19	19	19	19						ID
[DEG]	65~84.7	65~84.7	66~84.7	65~84.7	78~84.7	68~84.7	69~84.7	68~84.7	67~84.7	78~84.7	70~84.7	70~84.7	69~84.7	69~84.7	79~84.7	71~84.7	71~84.7	72~84.7	72~84.7	78~84.7						[DEG]
	1	1	1	1	1	1	1	1	1	1	1	1	1	1	1	1	1	1	1	1						
	8.7t	8.7t	8.7t	8.7t	8.7t	8.7t	8.7t	8.7t	8.7t	8.7t	8.7t	8.7t	8.7t	8.7t	8.7t	8.7t	8.7t	8.7t	8.7t	8.7t						

FLJ	1.6m + 7.4m	15.3 t	8.0m x 5.0m	360 °	JPN

m	11.4	11.4	11.4	11.4	11.4	15.1	15.1	15.1	15.1	15.1	15.1	15.1	15.1	15.1	15.1	15.1	15.1	15.1	15.1	15.1	18.8	18.8	18.8	18.8	18.8	m
°	5	15	30	45	60	5	15	30	45	60	5	15	30	45	60	5	15	30	45	60	5	15	30	45	60	°
3.0	7.3					7.3					7.3					7.3					7.3					3.0
3.5	7.3					7.3					7.3					7.3					7.3					3.5
4.0	7.3	7.3				7.3	7.3				7.3	7.3				7.3	7.3				7.3					4.0
4.5	7.3	7.3				7.3	7.3				7.3	7.3				7.3	7.3				7.3					4.5
5.0	7.3	7.3	7.3			7.3	7.3				7.3	7.3				7.3	7.3				7.3	7.3				5.0
6.0	7.3	7.3	7.3			7.3	7.3	7.3			7.3	7.3	7.3			7.3	7.3	7.3			7.3	7.3	7.3			6.0
7.0	7.3	7.3	7.3	6.5	5.0	7.3	7.3	7.3	6.7		7.3	7.3	7.3	6.7		7.3	7.3	7.3	6.7		7.3	7.3	7.3			7.0
8.0	7.3	7.3	7.3	6.3	4.9	7.3	7.3	7.3	6.5	5.0	7.3	7.3	7.3	6.5	5.0	7.3	7.3	7.3	6.5	5.0	7.3	7.3	7.3	6.6	5.0	8.0
9.0	7.3	7.3	7.2	6.0		7.3	7.3	7.3	6.3	4.9	7.3	7.3	7.3	6.3	4.9	7.3	7.3	7.3	6.3	4.9	7.3	7.3	7.3	6.4	4.9	9.0
10.0	7.3	7.3	6.9	5.9		7.3	7.3	7.3	6.1		7.3	7.3	7.3	6.1		7.3	7.3	7.3	6.1		7.3	7.3	7.3	6.3	4.9	10.0
11.0	7.3	7.3	6.6	5.7		7.3	7.3	7.0	5.9		7.3	7.3	7.0	5.9		7.3	7.3	7.0	5.9		7.3	7.3	7.3	6.1		11.0
12.0	7.3	7.0	6.3			7.3	7.3	6.8	5.8		7.3	7.3	6.8	5.8		7.3	7.3	6.8	5.8		7.3	7.3	7.2	6.0		12.0
14.0	6.4	6.2	5.9			7.3	7.1	6.3			7.3	7.1	6.3			7.3	7.1	6.3			7.3	7.3	6.7	5.7		14.0
16.0	5.7	5.7				6.8	6.4	5.9			6.8	6.4	5.9			6.8	6.4	5.9			7.3	7.1	6.3			16.0
18.0						6.0	5.9				5.9	5.9				5.6	5.8				6.5	6.6	6.0			18.0
20.0						4.9					4.6					4.4					5.3	5.4				20.0
22.0																					4.3	4.4				22.0
24.0																					3.5					24.0
26.0																										26.0
28.0																										28.0
30.0																										30.0
32.0																										32.0
34.0																										34.0
36.0																										36.0
38.0																										38.0
40.0																										40.0
42.0																										42.0
44.0																										44.0
46.0																										46.0
48.0																										48.0
50.0																										50.0
52.0																										52.0
54.0																										54.0
56.0																										56.0
58.0																										58.0
60.0																										60.0
64.0																										64.0
1	0	0	0	0	0	0	0	0	0	0	0	0	0	0	0	0	0	0	0	0	0	0	0	0	0	1
2	0	0	0	0	0	0	0	0	0	0	0	0	0	0	0	46	46	46	46	46	0	0	0	0	0	2
3	0	0	0	0	0	0	0	0	0	0	46	46	46	46	46	0	0	0	0	0	0	0	0	0	0	3
4	0	0	0	0	0	46	46	46	46	46	0	0	0	0	0	0	0	0	0	0	0	0	0	0	0	4
5	0	0	0	0	0	0	0	0	0	0	0	0	0	0	0	0	0	0	0	0	46	46	46	46	46	5
6	0	0	0	0	0	0	0	0	0	0	0	0	0	0	0	0	0	0	0	0	46	46	46	46	46	6
ID	1	1	1	1	1	76	76	76	76	76	105	105	105	105	105	131	131	131	131	131	30	30	30	30	30	ID
[DEG]	0~84.7	0~84.7	0~84.7	0~84.7	0~84.7	24~84.7	37~84.7	48~84.7	64~84.7	75~84.7	24~84.7	37~84.7	48~84.7	64~84.7	75~84.7	24~84.7	37~84.7	48~84.7	64~84.7	75~84.7	21~84.7	33~84.7	50~84.7	63~84.7	75~84.7	[DEG]
	1	1	1	1	1	1	1	1	1	1	1	1	1	1	1	1	1	1	1	1	1	1	1	1	1	
	8.7t	8.7t	8.7t	8.7t	8.7t	8.7t	8.7t	8.7t	8.7t	8.7t	8.7t	8.7t	8.7t	8.7t	8.7t	8.7t	8.7t	8.7t	8.7t	8.7t	8.7t	8.7t	8.7t	8.7t	8.7t	

m	18.8	18.8	18.8	18.8	18.8	18.8	18.8	18.8	18.8	18.8	18.8	18.8	18.8	18.8	18.8	22.6	22.6	22.6	22.6	22.6	26.3	26.3	26.3	26.3	26.3	m
°	5	15	30	45	60	5	15	30	45	60	5	15	30	45	60	5	15	30	45	60	5	15	30	45	60	°
3.0	7.3					7.3					7.3															3.0
3.5	7.3					7.3					7.3															3.5
4.0	7.3					7.3	7.3				7.3	7.3				7.3										4.0
4.5	7.3					7.3	7.3				7.3	7.3				7.3										4.5
5.0	7.3	7.3				7.3	7.3				7.3	7.3				7.3	7.3				7.3					5.0
6.0	7.3	7.3	7.3			7.3	7.3	7.3			7.3	7.3	7.3			7.3	7.3				7.3	7.3				6.0
7.0	7.3	7.3	7.3	6.9		7.3	7.3	7.3	6.9		7.3	7.3	7.3	6.9		7.3	7.3	7.3			7.3	7.3				7.0
8.0	7.3	7.3	7.3	6.6	5.0	7.3	7.3	7.3	6.6	5.0	7.3	7.3	7.3	6.6	5.0	7.3	7.3	7.3	6.8		7.3	7.3	7.3			8.0
9.0	7.3	7.3	7.3	6.4	4.9	7.3	7.3	7.3	6.4	4.9	7.3	7.3	7.3	6.4	4.9	7.3	7.3	7.3	6.6	5.0	7.3	7.3	7.3	6.7	5.0	9.0
10.0	7.3	7.3	7.3	6.3	4.9	7.3	7.3	7.3	6.3	4.9	7.3	7.3	7.3	6.3	4.9	7.3	7.3	7.3	6.4	4.9	7.3	7.3	7.3	6.5	4.9	10.0
11.0	7.3	7.3	7.3	6.1		7.3	7.3	7.3	6.1		7.3	7.3	7.3	6.1		7.3	7.3	7.3	6.3	4.8	7.3	7.3	7.3	6.4	4.9	11.0
12.0	7.3	7.3	7.2	6.0		7.3	7.3	7.2	6.0		7.3	7.3	7.2	6.0		7.3	7.3	7.3	6.1		7.3	7.3	7.3	6.3	4.8	12.0
14.0	7.3	7.3	6.7	5.7		7.3	7.3	6.7	5.7		7.3	7.3	6.7	5.7		7.2	6.9	6.5	5.9		7.3	7.3	7.3	6.0		14.0
16.0	7.3	7.1	6.3			7.3	7.1	6.3			7.0	7.1	6.3			6.4	6.1	5.9	5.7		5.5	6.0	6.5	5.8		16.0
18.0	6.2	6.4	6.0			5.8	6.0	6.0			5.4	5.6	5.9			5.7	5.5	5.3			4.0	4.3	4.8	5.1		18.0
20.0	4.9	5.1				4.6	4.7				4.2	4.3				5.1	5.0	4.9			2.8	3.1	3.4			20.0
22.0	4.0	4.1				3.6	3.7				3.2	3.3				4.4	4.5	4.5			1.9	2.1	2.4			22.0
24.0	3.2					2.8					2.4					3.6	3.7				1.1	1.3	1.5			24.0
26.0																2.9	3.0									26.0
28.0																										28.0
30.0																										30.0
32.0																										32.0
34.0																										34.0
36.0																										36.0
38.0																										38.0
40.0																										40.0
42.0																										42.0
44.0																										44.0
46.0																										46.0
48.0																										48.0
50.0																										50.0
52.0																										52.0
54.0																										54.0
56.0																										56.0
58.0																										58.0
60.0																										60.0
64.0																										64.0
1	0	0	0	0	0	0	0	0	0	0	0	0	0	0	0	0	0	0	0	0	92	92	92	92	92	1
2	0	0	0	0	0	0	0	0	0	0	46	46	46	46	46	0	0	0	0	0	92	92	92	92	92	2
3	0	0	0	0	0	46	46	46	46	46	46	46	46	46	46	0	0	0	0	0	0	0	0	0	0	3
4	46	46	46	46	46	46	46	46	46	46	0	0	0	0	0	0	0	0	0	0	0	0	0	0	0	4
5	46	46	46	46	46	0	0	0	0	0	0	0	0	0	0	46	46	46	46	46	0	0	0	0	0	5
6	0	0	0	0	0	0	0	0	0	0	0	0	0	0	0	92	92	92	92	92	0	0	0	0	0	6
ID	58	58	58	58	58	88	88	88	88	88	113	113	113	113	113	20	20	20	20	20	134	134	134	134	134	ID
[DEG]	21~84.7	33~84.7	50~84.7	63~84.7	75~84.7	20~84.7	33~84.7	50~84.7	63~84.7	75~84.7	20~84.7	32~84.7	50~84.7	63~84.7	75~84.7	29~84.7	30~84.7	46~84.7	63~84.7	76~84.7	44~84.7	45~84.7	47~84.7	63~84.7	76~84.7	[DEG]
	1	1	1	1	1	1	1	1	1	1	1	1	1	1	1	1	1	1	1	1	1	1	1	1	1	
	8.7t	8.7t	8.7t	8.7t	8.7t	8.7t	8.7t	8.7t	8.7t	8.7t	8.7t	8.7t	8.7t	8.7t	8.7t	8.7t	8.7t	8.7t	8.7t	8.7t	8.7t	8.7t	8.7t	8.7t	8.7t	

フルオートラフィングジブ

FLJ	1.6m + 7.4m	15.3 t	8.0m x 5.0m	360 °	JPN

m	30.0	30.0	30.0	30.0	30.0	30.0	30.0	30.0	30.0	30.0	33.7	33.7	33.7	33.7	33.7	37.4	37.4	37.4	37.4	37.4	37.4	37.4	37.4	37.4	37.4	m
°	5	15	30	45	60	5	15	30	45	60	5	15	30	45	60	5	15	30	45	60	5	15	30	45	60	°
3.0																										3.0
3.5																										3.5
4.0																										4.0
4.5																										4.5
5.0	7.3					7.3																				5.0
6.0	7.3	7.3				7.3	7.3				7.3															6.0
7.0	7.3	7.3				7.3	7.3				7.3	7.3				7.1					7.3					7.0
8.0	7.3	7.3	7.3			7.3	7.3	7.3			7.3	7.3				7.1	7.1				7.3	7.3				8.0
9.0	7.3	7.3	7.3			7.3	7.3	7.3	6.8		7.3	7.3	7.3			7.1	7.1				7.3	7.3				9.0
10.0	7.3	7.3	7.3	6.6	5.0	7.3	7.3	7.3	6.6	5.0	7.3	7.3	7.3	6.7		7.1	7.1	7.1			7.3	7.3	7.3			10.0
11.0	7.3	7.3	7.3	6.5	4.9	7.3	7.3	7.3	6.5	4.9	7.3	7.3	7.3	6.6	4.9	7.1	7.1	7.1	6.7	5.0	7.3	7.3	7.2	6.7		11.0
12.0	7.3	7.3	7.1	6.4	4.9	7.3	7.3	7.3	6.4	4.9	7.3	7.3	7.3	6.5	4.9	7.1	7.1	7.1	6.6	4.9	7.3	7.3	6.9	6.4	4.9	12.0
14.0	6.8	6.6	6.3	6.1		7.3	7.3	7.3	6.1		7.3	7.3	7.3	6.2	4.8	7.1	7.1	7.1	6.3	4.8	6.9	6.6	6.2	5.9	4.8	14.0
16.0	6.0	5.8	5.6	5.5		5.5	6.0	6.6	5.9		5.5	6.0	6.6	6.0		5.7	6.1	6.7	6.1		6.1	5.9	5.7	5.5		16.0
18.0	5.3	5.2	5.1	5.0		4.0	4.4	4.8	5.2		4.0	4.4	4.9	5.2		4.1	4.5	5.0	5.4		5.5	5.4	5.2	5.0		18.0
20.0	4.8	4.7	4.6	4.5		2.8	3.1	3.5	3.8		2.8	3.1	3.5	3.8		2.9	3.2	3.7	4.0		5.0	4.9	4.7	4.6		20.0
22.0	4.3	4.3	4.2			1.8	2.1	2.4			1.8	2.1	2.5	2.7		2.0	2.2	2.6	2.9		4.0	4.2	4.3	4.3		22.0
24.0	3.5	3.6	3.8			1.1	1.3	1.5					1.6					1.7	1.9		3.2	3.4	3.6	3.8		24.0
26.0	2.8	3.0	3.1																		2.6	2.7	2.9			26.0
28.0	2.3	2.4																			2.0	2.1	2.3			28.0
30.0	1.8	1.9																			1.5	1.6	1.7			30.0
32.0	1.4	1.4																			1.1	1.2	1.3			32.0
34.0	1.0																									34.0
36.0																										36.0
38.0																										38.0
40.0																										40.0
42.0																										42.0
44.0																										44.0
46.0																										46.0
48.0																										48.0
50.0																										50.0
52.0																										52.0
54.0																										54.0
56.0																										56.0
58.0																										58.0
60.0																										60.0
64.0																										64.0
1	0	0	0	0	0	92	92	92	92	92	92	92	92	92	92	92	92	92	92	92	0	0	0	0	0	1
2	0	0	0	0	0	92	92	92	92	92	92	92	92	92	92	92	92	92	92	92	0	0	0	0	0	2
3	0	0	0	0	0	46	46	46	46	46	92	92	92	92	92	92	92	92	92	92	46	46	46	46	46	3
4	46	46	46	46	46	0	0	0	0	0	0	0	0	0	0	46	46	46	46	46	92	92	92	92	92	4
5	92	92	92	92	92	0	0	0	0	0	0	0	0	0	0	0	0	0	0	0	92	92	92	92	92	5
6	92	92	92	92	92	0	0	0	0	0	0	0	0	0	0	0	0	0	0	0	92	92	92	92	92	6
ID	22	22	22	22	22	116	116	116	116	116	110	110	110	110	110	93	93	93	93	93	24	24	24	24	24	ID
[DEG]	24~84.7	32~84.7	49~84.7	63~84.7	78~84.7	50~84.7	51~84.7	53~84.7	62~84.7	78~84.7	58~84.7	59~84.7	57~84.7	62~84.7	76~84.7	61~84.7	62~84.7	61~84.7	62~84.7	78~84.7	45~84.7	46~84.7	48~84.7	63~84.7	78~84.7	[DEG]
	1	1	1	1	1	1	1	1	1	1	1	1	1	1	1	1	1	1	1	1	1	1	1	1	1	
	8.7t	8.7t	8.7t	8.7t	8.7t	8.7t	8.7t	8.7t	8.7t	8.7t	8.7t	8.7t	8.7t	8.7t	8.7t	8.7t	8.7t	8.7t	8.7t	8.7t	8.7t	8.7t	8.7t	8.7t	8.7t	

m	41.2	41.2	41.2	41.2	41.2	44.9	44.9	44.9	44.9	44.9	44.9	44.9	44.9	44.9	44.9	48.6	48.6	48.6	48.6	48.6	48.6	48.6	48.6	48.6	48.6	m
°	5	15	30	45	60	5	15	30	45	60	5	15	30	45	60	5	15	30	45	60	5	15	30	45	60	°
3.0																										3.0
3.5																										3.5
4.0																										4.0
4.5																										4.5
5.0																										5.0
6.0																										6.0
7.0	7.3																									7.0
8.0	7.3										6.5															8.0
9.0	7.3	7.3				4.6					6.5					4.8					5.4					9.0
10.0	7.3	7.3	7.3			4.6	4.6				6.5	6.5				4.8					5.4					10.0
11.0	7.3	7.3	7.3			4.6	4.6				6.5	6.5	6.5			4.8	4.8				5.4	5.4				11.0
12.0	7.3	7.3	7.3	6.6	4.9	4.6	4.6	4.6			6.5	6.5	6.5			4.8	4.8	4.8			5.4	5.4	5.4			12.0
14.0	7.3	7.3	7.3	6.4	4.9	4.6	4.6	4.6	4.6	4.6	6.5	6.5	6.5	6.5	4.9	4.8	4.8	4.8	4.8	4.8	5.4	5.4	5.4	5.4	4.9	14.0
16.0	5.8	6.2	6.8	6.2		4.6	4.6	4.6	4.6	4.6	5.9	6.4	6.5	6.3	4.8	4.8	4.8	4.8	4.8	4.8	5.4	5.4	5.4	5.4	4.8	16.0
18.0	4.2	4.6	5.1	5.5		4.6	4.6	4.6	4.6		4.4	4.8	5.3	5.7		4.8	4.8	4.8	4.8		4.5	4.9	5.4	5.4		18.0
20.0	3.0	3.3	3.8	4.1		4.6	4.6	4.6	4.6		3.2	3.5	3.9	4.3		3.9	4.2	4.6	4.8		3.3	3.7	4.1	4.4		20.0
22.0	2.0	2.3	2.7	3.0		3.6	3.8	4.1	4.2		2.2	2.5	2.9	3.2		2.9	3.2	3.5	3.8			2.6	3.0	3.3		22.0
24.0			1.8	2.1		2.8	3.0	3.3	3.4					2.2		2.1	2.4	2.6	2.9					2.4		24.0
26.0						2.1	2.3	2.5	2.7									1.9	2.1							26.0
28.0						1.6	1.7	1.9	2.1																	28.0
30.0						1.1	1.2	1.4																		30.0
32.0																										32.0
34.0																										34.0
36.0																										36.0
38.0																										38.0
40.0																										40.0
42.0																										42.0
44.0																										44.0
46.0																										46.0
48.0																										48.0
50.0																										50.0
52.0																										52.0
54.0																										54.0
56.0																										56.0
58.0																										58.0
60.0																										60.0
64.0																										64.0
1	92	92	92	92	92	0	0	0	0	0	92	92	92	92	92	46	46	46	46	46	92	92	92	92	92	1
2	92	92	92	92	92	46	46	46	46	46	92	92	92	92	92	92	92	92	92	92	92	92	92	92	92	2
3	92	92	92	92	92	92	92	92	92	92	92	92	92	92	92	92	92	92	92	92	92	92	92	92	92	3
4	92	92	92	92	92	92	92	92	92	92	92	92	92	92	92	92	92	92	92	92	92	92	92	92	92	4
5	0	0	0	0	0	92	92	92	92	92	46	46	46	46	46	92	92	92	92	92	92	92	92	92	92	5
6	0	0	0	0	0	92	92	92	92	92	0	0	0	0	0	46	46	46	46	46	0	0	0	0	0	6
ID	83	83	83	83	83	26	26	26	26	26	65	65	65	65	65	38	38	38	38	38	49	49	49	49	49	ID
[DEG]	64~84.7	65~84.7	64~84.7	65~84.7	79~84.7	56~84.7	57~84.7	59~84.7	62~84.7	78~84.7	66~84.7	67~84.7	69~84.7	67~84.7	78~84.7	66~84.7	67~84.7	66~84.7	67~84.7	79~84.7	70~84.7	69~84.7	71~84.7	69~84.7	79~84.7	[DEG]
	1	1	1	1	1	1	1	1	1	1	1	1	1	1	1	1	1	1	1	1	1	1	1	1	1	
	8.7t	8.7t	8.7t	8.7t	8.7t	8.7t	8.7t	8.7t	8.7t	8.7t	8.7t	8.7t	8.7t	8.7t	8.7t	8.7t	8.7t	8.7t	8.7t	8.7t	8.7t	8.7t	8.7t	8.7t	8.7t	

FLJ	1.6m + 7.4m	15.3 t	8.0m x 5.0m	360 °	JPN

m	52.3	52.3	52.3	52.3	52.3	52.3	52.3	52.3	52.3	52.3	56.0	56.0	56.0	56.0	56.0	60.0	60.0	60.0	60.0	60.0	m
°	5	15	30	45	60	5	15	30	45	60	5	15	30	45	60	5	15	30	45	60	°
3.0																					3.0
3.5																					3.5
4.0																					4.0
4.5																					4.5
5.0																					5.0
6.0																					6.0
7.0																					7.0
8.0																					8.0
9.0																					9.0
10.0	3.9					4.4															10.0
11.0	3.9					4.4					3.7										11.0
12.0	3.9	3.9				4.4	4.4				3.7										12.0
14.0	3.9	3.9	3.9			4.4	4.4	4.4			3.7	3.7	3.7			3.2	3.2				14.0
16.0	3.9	3.9	3.9	3.9	3.9	4.4	4.4	4.4	4.4	4.4	3.7	3.7	3.7	3.7	3.7	3.2	3.2	3.2	3.2		16.0
18.0	3.9	3.9	3.9	3.9	3.9	4.4	4.4	4.4	4.4	4.4	3.7	3.7	3.7	3.7	3.7	3.2	3.2	3.2	3.2	3.2	18.0
20.0	3.9	3.9	3.9	3.9		3.5	3.8	4.3	4.4		3.7	3.7	3.7	3.7		3.2	3.2	3.2	3.2	3.2	20.0
22.0	3.1	3.3	3.7	3.9		2.5	2.8	3.2	3.5		2.7	3.0	3.4	3.6				3.2	3.2		22.0
24.0	2.3	2.5	2.8	3.0				2.3	2.6				2.5	2.7							24.0
26.0			2.1	2.3																	26.0
28.0																					28.0
30.0																					30.0
32.0																					32.0
34.0																					34.0
36.0																					36.0
38.0																					38.0
40.0																					40.0
42.0																					42.0
44.0																					44.0
46.0																					46.0
48.0																					48.0
50.0																					50.0
52.0																					52.0
54.0																					54.0
56.0																					56.0
58.0																					58.0
60.0																					60.0
64.0																					64.0
1	46	46	46	46	46	92	92	92	92	92	92	92	92	92	92	100	100	100	100	100	1
2	92	92	92	92	92	92	92	92	92	92	92	92	92	92	92	100	100	100	100	100	2
3	92	92	92	92	92	92	92	92	92	92	92	92	92	92	92	100	100	100	100	100	3
4	92	92	92	92	92	92	92	92	92	92	92	92	92	92	92	100	100	100	100	100	4
5	92	92	92	92	92	92	92	92	92	92	92	92	92	92	92	100	100	100	100	100	5
6	92	92	92	92	92	46	46	46	46	46	92	92	92	92	92	100	100	100	100	100	6
ID	28	28	28	28	28	39	39	39	39	39	29	29	29	29	29	19	19	19	19	19	ID
[DEG]	68~84.7	69~84.7	68~84.7	69~84.7	78~84.7	70~84.7	71~84.7	70~84.7	71~84.7	78~84.7	71~84.7	73~84.7	72~84.7	73~84.7	79~84.7	75~84.7	76~84.7	76~84.7	77~84.7	79~84.7	[DEG]
	1	1	1	1	1	1	1	1	1	1	1	1	1	1	1	1	1	1	1	1	
	8.7t	8.7t	8.7t	8.7t	8.7t	8.7t	8.7t	8.7t	8.7t	8.7t	8.7t	8.7t	8.7t	8.7t	8.7t	8.7t	8.7t	8.7t	8.7t	8.7t	

FLJ	1.6m + 12.4m	15.3 t	8.0m x 5.0m	360 °	JPN

m	11.4	11.4	11.4	11.4	11.4	15.1	15.1	15.1	15.1	15.1	15.1	15.1	15.1	15.1	15.1	15.1	15.1	15.1	15.1	15.1	18.8	18.8	18.8	18.8	18.8	m
°	5	15	30	45	60	5	15	30	45	60	5	15	30	45	60	5	15	30	45	60	5	15	30	45	60	°
3.0	4.3																									3.0
3.5	4.3																									3.5
4.0	4.3					4.3					4.3					4.3					4.3					4.0
4.5	4.3					4.3					4.3					4.3					4.3					4.5
5.0	4.3					4.3					4.3					4.3					4.3					5.0
6.0	4.3	4.3				4.3	4.3				4.3	4.3				4.3	4.3				4.3					6.0
7.0	4.3	4.3				4.3	4.3				4.3	4.3				4.3	4.3				4.3	4.3				7.0
8.0	4.3	4.3				4.3	4.3				4.3	4.3				4.3	4.3				4.3	4.3				8.0
9.0	4.3	4.3	4.3			4.3	4.3	4.3			4.3	4.3	4.3			4.3	4.3	4.3			4.3	4.3				9.0
10.0	4.3	4.3	4.1			4.3	4.3	4.3			4.3	4.3	4.3			4.3	4.3	4.3			4.3	4.3	4.3			10.0
11.0	4.3	4.3	3.9	3.2		4.3	4.3	4.1	3.3		4.3	4.3	4.1	3.3		4.3	4.3	4.1	3.3		4.3	4.3	4.1			11.0
12.0	4.3	4.3	3.7	3.1		4.3	4.3	3.9	3.2		4.3	4.3	3.9	3.2		4.3	4.3	3.9	3.2		4.3	4.3	3.9	3.3		12.0
14.0	4.3	4.0	3.3	2.9		4.3	4.3	3.5	3.0		4.3	4.3	3.5	3.0		4.3	4.3	3.5	3.0		4.3	4.3	3.7	3.1		14.0
16.0	3.8	3.5	3.0	2.7		4.3	3.9	3.3	2.8		4.3	3.9	3.3	2.8		4.3	3.9	3.3	2.8		4.3	4.1	3.4	2.9		16.0
18.0	3.4	3.2	2.8			3.9	3.6	3.0	2.7		3.9	3.6	3.0	2.7		3.9	3.6	3.0	2.7		4.3	3.8	3.2	2.8		18.0
20.0	3.0	2.9				3.5	3.3	2.9			3.5	3.3	2.9			3.5	3.3	2.9			4.0	3.5	3.0	2.7		20.0
22.0	2.7					3.2	3.0				3.2	3.0				3.2	3.0				3.6	3.3	2.9			22.0
24.0						2.9	2.8				2.9	2.8				2.9	2.8				3.3	3.1	2.8			24.0
26.0																					3.0	2.9				26.0
28.0																					2.8					28.0
30.0																										30.0
32.0																										32.0
34.0																										34.0
36.0																										36.0
38.0																										38.0
40.0																										40.0
42.0																										42.0
44.0																										44.0
46.0																										46.0
48.0																										48.0
50.0																										50.0
52.0																										52.0
54.0																										54.0
56.0																										56.0
58.0																										58.0
60.0																										60.0
64.0																										64.0
1	0	0	0	0		0	0	0	0		0	0	0	0		0	0	0	0		0	0	0	0		1
2	0	0	0	0		0	0	0	0		0	0	0	0		46	46	46	46		0	0	0	0		2
3	0	0	0	0		0	0	0	0		46	46	46	46		0	0	0	0		0	0	0	0		3
4	0	0	0	0		46	46	46	46		0	0	0	0		0	0	0	0		0	0	0	0		4
5	0	0	0	0		0	0	0	0		0	0	0	0		0	0	0	0		46	46	46	46		5
6	0	0	0	0		0	0	0	0		0	0	0	0		0	0	0	0		46	46	46	46		6
ID	1	1	1	1		76	76	76	76		105	105	105	105		131	131	131	131		30	30	30	30		ID
[DEG]	0~84.7	0~84.7	0~84.7	0~84.7		29~84.7	32~84.7	51~84.7	60~84.7		29~84.7	31~84.7	51~84.7	60~84.7		29~84.7	31~84.7	51~84.7	60~84.7		26~84.7	37~84.7	46~84.7	60~84.7		[DEG]
	1	1	1	1		1	1	1	1		1	1	1	1		1	1	1	1		1	1	1	1		
	8.7t	8.7t	8.7t	8.7t		8.7t	8.7t	8.7t	8.7t		8.7t	8.7t	8.7t	8.7t		8.7t	8.7t	8.7t	8.7t		8.7t	8.7t	8.7t	8.7t		

フルオートラフィングジブ

FLJ	1.6m + 12.4m	15.3 t	8.0m x 5.0m	360 °	JPN

m	18.8	18.8	18.8	18.8	18.8	18.8	18.8	18.8	18.8	18.8	18.8	18.8	18.8	18.8	18.8	22.6	22.6	22.6	22.6	22.6	26.3	26.3	26.3	26.3	26.3	m
°	5	15	30	45	60	5	15	30	45	60	5	15	30	45	60	5	15	30	45	60	5	15	30	45	60	°
3.0																										3.0
3.5																										3.5
4.0	4.3					4.3					4.3															4.0
4.5	4.3					4.3					4.3															4.5
5.0	4.3					4.3					4.3					4.3										5.0
6.0	4.3					4.3					4.3					4.3					4.3					6.0
7.0	4.3	4.3				4.3	4.3				4.3	4.3				4.3	4.3				4.3					7.0
8.0	4.3	4.3				4.3	4.3				4.3	4.3				4.3	4.3				4.3	4.3				8.0
9.0	4.3	4.3				4.3	4.3				4.3	4.3				4.3	4.3				4.3	4.3				9.0
10.0	4.3	4.3	4.3			4.3	4.3	4.3			4.3	4.3	4.3			4.3	4.3				4.3	4.3				10.0
11.0	4.3	4.3	4.1			4.3	4.3	4.2			4.3	4.3	4.2			4.3	4.3	4.1			4.3	4.3	4.3			11.0
12.0	4.3	4.3	4.0	3.3		4.3	4.3	4.0	3.3		4.3	4.3	4.0	3.3		4.3	4.3	4.0			4.3	4.3	4.2			12.0
14.0	4.3	4.3	3.7	3.1		4.3	4.3	3.7	3.1		4.3	4.3	3.7	3.1		4.3	4.3	3.7	3.1		4.3	4.3	3.9	3.2	2.7	14.0
16.0	4.3	4.1	3.5	2.9		4.3	4.2	3.5	2.9		4.3	4.2	3.5	2.9		4.3	4.2	3.5	3.0		4.3	4.3	3.7	3.0	2.6	16.0
18.0	4.3	3.8	3.2	2.8		4.3	3.8	3.2	2.8		4.3	3.9	3.2	2.8		4.3	3.9	3.3	2.9		4.3	4.2	3.5	2.9		18.0
20.0	4.0	3.6	3.0	2.7		4.0	3.6	3.0	2.7		4.0	3.6	3.0	2.7		4.2	3.7	3.1	2.8		3.8	4.0	3.3	2.8		20.0
22.0	3.6	3.3	2.9			3.6	3.3	2.9			3.6	3.3	2.9			3.9	3.4	3.0			2.8	3.2	3.2	2.7		22.0
24.0	3.3	3.1	2.8			3.3	3.1	2.8			3.3	3.1	2.8			3.6	3.3	2.9			2.0	2.4	2.8			24.0
26.0	3.0	2.9				3.0	2.9				2.6	2.8				3.4	3.1	2.8			1.4	1.7	2.0			26.0
28.0	2.7					2.4					2.1					3.0	3.0					1.1	1.4			28.0
30.0																2.5	2.6									30.0
32.0																2.1										32.0
34.0																										34.0
36.0																										36.0
38.0																										38.0
40.0																										40.0
42.0																										42.0
44.0																										44.0
46.0																										46.0
48.0																										48.0
50.0																										50.0
52.0																										52.0
54.0																										54.0
56.0																										56.0
58.0																										58.0
60.0																										60.0
64.0																										64.0
1	0	0	0	0		0	0	0	0		0	0	0	0		0	0	0	0		92	92	92	92	92	1
2	0	0	0	0		0	0	0	0		46	46	46	46		0	0	0	0		92	92	92	92	92	2
3	0	0	0	0		46	46	46	46		46	46	46	46		0	0	0	0		0	0	0	0	0	3
4	46	46	46	46		46	46	46	46		0	0	0	0		0	0	0	0		0	0	0	0	0	4
5	46	46	46	46		0	0	0	0		0	0	0	0		46	46	46	46		0	0	0	0	0	5
6	0	0	0	0		0	0	0	0		0	0	0	0		92	92	92	92		0	0	0	0	0	6
ID	58	58	58	58		88	88	88	88		113	113	113	113		20	20	20	20		134	134	134	134	134	ID
[DEG]	26~84.7	37~84.7	46~84.7	60~84.7		26~84.7	37~84.7	46~84.7	60~84.7		25~84.7	37~84.7	46~84.7	60~84.7		24~84.7	34~84.7	49~84.7	65~84.7		48~84.7	46~84.7	49~84.7	64~84.7	77~84.7	[DEG]
	1	1	1	1		1	1	1	1		1	1	1	1		1	1	1	1		1	1	1	1	1	
	8.7t	8.7t	8.7t	8.7t		8.7t	8.7t	8.7t	8.7t		8.7t	8.7t	8.7t	8.7t		8.7t	8.7t	8.7t	8.7t		8.7t	8.7t	8.7t	8.7t	8.7t	

m	30.0	30.0	30.0	30.0	30.0	30.0	30.0	30.0	30.0	30.0	33.7	33.7	33.7	33.7	33.7	37.4	37.4	37.4	37.4	37.4	37.4	37.4	37.4	37.4	37.4	m
°	5	15	30	45	60	5	15	30	45	60	5	15	30	45	60	5	15	30	45	60	5	15	30	45	60	°
3.0																										3.0
3.5																										3.5
4.0																										4.0
4.5																										4.5
5.0																										5.0
6.0	4.0					4.3																				6.0
7.0	4.0					4.3					4.3					4.1										7.0
8.0	4.0					4.3					4.3					4.1					4.3					8.0
9.0	4.0	4.0				4.3	4.3				4.3	4.3				4.1					4.3					9.0
10.0	4.0	4.0				4.3	4.3				4.3	4.3				4.1	4.1				4.3	4.3				10.0
11.0	4.0	4.0				4.3	4.3	4.3			4.3	4.3				4.1	4.1				4.3	4.3				11.0
12.0	4.0	4.0	4.0			4.3	4.3	4.2			4.3	4.3	4.2			4.1	4.1				4.3	4.3				12.0
14.0	4.0	4.0	3.7	3.2		4.3	4.3	3.9	3.2		4.3	4.3	3.9	3.3		4.1	4.1	3.9			4.3	4.3	3.7			14.0
16.0	4.0	4.0	3.5	3.1		4.3	4.3	3.7	3.1		4.3	4.3	3.7	3.2	2.6	4.1	4.1	3.7	3.2	2.6	4.3	4.3	3.5	3.1		16.0
18.0	4.0	4.0	3.4	3.0		4.3	4.3	3.5	3.0		4.3	4.3	3.6	3.0	2.6	4.1	4.1	3.6	3.1	2.6	4.3	4.1	3.4	3.0		18.0
20.0	4.0	3.8	3.2	2.9		3.7	4.1	3.4	2.9		3.7	4.1	3.4	2.9		3.7	4.1	3.4	3.0		4.3	3.9	3.2	2.9		20.0
22.0	4.0	3.6	3.1	2.8		2.7	3.2	3.2	2.8		2.7	3.1	3.3	2.8		2.7	3.2	3.3	2.9		4.2	3.7	3.1	2.8		22.0
24.0	3.7	3.4	3.0	2.7		1.9	2.3	2.8	2.7		1.9	2.3	2.8	2.8		1.9	2.3	2.9	2.8		3.8	3.5	3.0	2.7		24.0
26.0	3.4	3.3	2.9			1.3	1.6	2.0				1.6	2.0	2.4			1.6	2.1	2.5		3.1	3.3	2.9	2.7		26.0
28.0	2.8	3.0	2.8				1.0	1.4					1.4					1.4	1.7		2.5	2.7	2.8	2.6		28.0
30.0	2.3	2.5	2.7																		2.0	2.2	2.5			30.0
32.0	1.9	2.0	2.2																		1.6	1.8	2.0			32.0
34.0	1.5	1.6																			1.2	1.4	1.5			34.0
36.0		1.3																			0.9	1.0	1.2			36.0
38.0																										38.0
40.0																										40.0
42.0																										42.0
44.0																										44.0
46.0																										46.0
48.0																										48.0
50.0																										50.0
52.0																										52.0
54.0																										54.0
56.0																										56.0
58.0																										58.0
60.0																										60.0
64.0																										64.0
1	0	0	0	0		92	92	92	92		92	92	92	92	92	92	92	92	92	92	0	0	0	0		1
2	0	0	0	0		92	92	92	92		92	92	92	92	92	92	92	92	92	92	0	0	0	0		2
3	0	0	0	0		46	46	46	46		92	92	92	92	92	92	92	92	92	92	46	46	46	46		3
4	46	46	46	46		0	0	0	0		0	0	0	0	0	46	46	46	46	46	92	92	92	92		4
5	92	92	92	92		0	0	0	0		0	0	0	0	0	0	0	0	0	0	92	92	92	92		5
6	92	92	92	92		0	0	0	0		0	0	0	0	0	0	0	0	0	0	92	92	92	92		6
ID	22	22	22	22		116	116	116	116		110	110	110	110	110	93	93	93	93	93	24	24	24	24		ID
[DEG]	38~84.7	35~84.7	47~84.7	64~84.7		53~84.7	52~84.7	55~84.7	64~84.7		60~84.7	59~84.7	59~84.7	64~84.7	77~84.7	62~84.7	62~84.7	62~84.7	64~84.7	79~84.7	45~84.7	47~84.7	49~84.7	64~84.7		[DEG]
	1	1	1	1		1	1	1	1		1	1	1	1	1	1	1	1	1	1	1	1	1	1		
	8.7t	8.7t	8.7t	8.7t		8.7t	8.7t	8.7t	8.7t		8.7t	8.7t	8.7t	8.7t	8.7t	8.7t	8.7t	8.7t	8.7t	8.7t	8.7t	8.7t	8.7t	8.7t		

FLJ	1.6m + 12.4m	15.3 t	8.0m x 5.0m	360 °	JPN

m	41.2	41.2	41.2	41.2	41.2	44.9	44.9	44.9	44.9	44.9	44.9	44.9	44.9	44.9	44.9	48.6	48.6	48.6	48.6	48.6	48.6	48.6	48.6	48.6	48.6	m
°	5	15	30	45	60	5	15	30	45	60	5	15	30	45	60	5	15	30	45	60	5	15	30	45	60	°
3.0																										3.0
3.5																										3.5
4.0																										4.0
4.5																										4.5
5.0																										5.0
6.0																										6.0
7.0																										7.0
8.0	4.3																									8.0
9.0	4.3										4.0															9.0
10.0	4.3					3.0					4.0					3.2					3.6					10.0
11.0	4.3	4.3				3.0					4.0	4.0				3.2					3.6					11.0
12.0	4.3	4.3				3.0	3.0				4.0	4.0				3.2	3.2				3.6	3.6				12.0
14.0	4.3	4.3	3.9			3.0	3.0				4.0	4.0				3.2	3.2				3.6	3.6				14.0
16.0	4.3	4.3	3.7	3.2		3.0	3.0	3.0			4.0	4.0	3.7			3.2	3.2	3.2			3.6	3.6	3.6			16.0
18.0	4.3	4.3	3.5	3.1	2.6	3.0	3.0	3.0	2.9		4.0	4.0	3.5	3.0	2.6	3.2	3.2	3.2	3.0		3.6	3.6	3.5	3.0		18.0
20.0	3.8	4.1	3.4	3.0	2.6	3.0	3.0	3.0	2.9		3.9	4.0	3.4	2.9	2.6	3.2	3.2	3.2	2.9	2.6	3.6	3.6	3.3	2.9	2.6	20.0
22.0	2.8	3.2	3.3	2.9		3.0	3.0	3.0	2.8		2.9	3.4	3.2	2.9		3.2	3.2	3.2	2.8	2.5	3.0	3.4	3.2	2.8	2.5	22.0
24.0	2.0	2.4	2.9	2.8		3.0	3.0	3.0	2.7		2.1	2.5	3.1	2.8		2.7	3.1	3.1	2.7			2.6	3.1	2.8		24.0
26.0			2.2	2.5		2.6	2.9	2.9	2.6				2.3	2.7		2.0	2.3	2.8	2.7				2.4	2.7		26.0
28.0				1.8		2.1	2.3	2.7	2.6					2.0			1.7	2.1	2.5					2.1		28.0
30.0						1.6	1.8	2.1	2.3									1.6	1.9							30.0
32.0						1.2	1.4	1.6	1.8																	32.0
34.0								1.2																		34.0
36.0																										36.0
38.0																										38.0
40.0																										40.0
42.0																										42.0
44.0																										44.0
46.0																										46.0
48.0																										48.0
50.0																										50.0
52.0																										52.0
54.0																										54.0
56.0																										56.0
58.0																										58.0
60.0																										60.0
64.0																										64.0
1	92	92	92	92	92	0	0	0	0		92	92	92	92	92	46	46	46	46	46	92	92	92	92	92	1
2	92	92	92	92	92	46	46	46	46		92	92	92	92	92	92	92	92	92	92	92	92	92	92	92	2
3	92	92	92	92	92	92	92	92	92		92	92	92	92	92	92	92	92	92	92	92	92	92	92	92	3
4	92	92	92	92	92	92	92	92	92		92	92	92	92	92	92	92	92	92	92	92	92	92	92	92	4
5	0	0	0	0	0	92	92	92	92		46	46	46	46	46	92	92	92	92	92	92	92	92	92	92	5
6	0	0	0	0	0	92	92	92	92		0	0	0	0	0	46	46	46	46	46	0	0	0	0	0	6
ID	83	83	83	83	83	26	26	26	26		65	65	65	65	65	38	38	38	38	38	49	49	49	49	49	ID
[DEG]	65~84.7	67~84.7	67~84.7	66~84.7	78~84.7	58~84.7	60~84.7	60~84.7	64~84.7		67~84.7	69~84.7	69~84.7	69~84.7	79~84.7	67~84.7	67~84.7	67~84.7	68~84.7	78~84.7	71~84.7	71~84.7	71~84.7	71~84.7	78~84.7	[DEG]
	1	1	1	1	1	1	1	1	1		1	1	1	1	1	1	1	1	1	1	1	1	1	1	1	
	8.7t	8.7t	8.7t	8.7t	8.7t	8.7t	8.7t	8.7t	8.7t		8.7t	8.7t	8.7t	8.7t	8.7t	8.7t	8.7t	8.7t	8.7t	8.7t	8.7t	8.7t	8.7t	8.7t	8.7t	

m	52.3	52.3	52.3	52.3	52.3	52.3	52.3	52.3	52.3	52.3	56.0	56.0	56.0	56.0	56.0	60.0	60.0	60.0	60.0	60.0						m
°	5	15	30	45	60	5	15	30	45	60	5	15	30	45	60	5	15	30	45	60						°
3.0																										3.0
3.5																										3.5
4.0																										4.0
4.5																										4.5
5.0																										5.0
6.0																										6.0
7.0																										7.0
8.0																										8.0
9.0																										9.0
10.0																										10.0
11.0	2.7					3.0																				11.0
12.0	2.7					3.0					2.6															12.0
14.0	2.7	2.7				3.0	3.0				2.6	2.6				1.9										14.0
16.0	2.7	2.7	2.7			3.0	3.0	3.0			2.6	2.6				1.9	1.9									16.0
18.0	2.7	2.7	2.7			3.0	3.0	3.0			2.6	2.6	2.6			1.9	1.9	1.9								18.0
20.0	2.7	2.7	2.7	2.7	2.6	3.0	3.0	3.0	2.9	2.6	2.6	2.6	2.6	2.6		1.9	1.9	1.9	1.9							20.0
22.0	2.7	2.7	2.7	2.7	2.5	3.0	3.0	3.0	2.8	2.5	2.6	2.6	2.6	2.6	2.5	1.9	1.9	1.9	1.9	1.9						22.0
24.0	2.7	2.7	2.7	2.7			2.7	3.0	2.7			2.6	2.6	2.6	2.5		1.9	1.9	1.9	1.9						24.0
26.0	2.1	2.5	2.7	2.6				2.5	2.7				2.6	2.6				1.9	1.9							26.0
28.0		1.9	2.3	2.6					2.2					2.3												28.0
30.0			1.7	2.0																						30.0
32.0																										32.0
34.0																										34.0
36.0																										36.0
38.0																										38.0
40.0																										40.0
42.0																										42.0
44.0																										44.0
46.0																										46.0
48.0																										48.0
50.0																										50.0
52.0																										52.0
54.0																										54.0
56.0																										56.0
58.0																										58.0
60.0																										60.0
64.0																										64.0
1	46	46	46	46	46	92	92	92	92	92	92	92	92	92	92	100	100	100	100	100						1
2	92	92	92	92	92	92	92	92	92	92	92	92	92	92	92	100	100	100	100	100						2
3	92	92	92	92	92	92	92	92	92	92	92	92	92	92	92	100	100	100	100	100						3
4	92	92	92	92	92	92	92	92	92	92	92	92	92	92	92	100	100	100	100	100						4
5	92	92	92	92	92	92	92	92	92	92	92	92	92	92	92	100	100	100	100	100						5
6	92	92	92	92	92	46	46	46	46	46	92	92	92	92	92	100	100	100	100	100						6
ID	28	28	28	28	28	39	39	39	39	39	29	29	29	29	29	19	19	19	19	19						ID
[DEG]	69~84.7	69~84.7	69~84.7	70~84.7	79~84.7	73~84.7	72~84.7	73~84.7	72~84.7	79~84.7	74~84.7	74~84.7	74~84.7	74~84.7	79~84.7	75~84.7	75~84.7	75~84.7	77~84.7	79~84.7						[DEG]
	1	1	1	1	1	1	1	1	1	1	1	1	1	1	1	1	1	1	1	1						
	8.7t	8.7t	8.7t	8.7t	8.7t	8.7t	8.7t	8.7t	8.7t	8.7t	8.7t	8.7t	8.7t	8.7t	8.7t	8.7t	8.7t	8.7t	8.7t	8.7t						

フルオートラフィングジブ

FLJ	1.6m + 17.4m	15.3 t	8.0m x 5.0m	360 °	JPN

m	11.4	11.4	11.4	11.4	11.4	15.1	15.1	15.1	15.1	15.1	15.1	15.1	15.1	15.1	15.1	15.1	15.1	15.1	15.1	15.1	18.8	18.8	18.8	18.8	18.8	m
°	5	15	30	45	60	5	15	30	45	60	5	15	30	45	60	5	15	30	45	60	5	15	30	45	60	°
3.0																										3.0
3.5																										3.5
4.0																										4.0
4.5	3.3																									4.5
5.0	3.3					3.1					3.3					3.3										5.0
6.0	3.3					3.1					3.3					3.3					2.7					6.0
7.0	3.3					3.1					3.3					3.3					2.7					7.0
8.0	3.3	3.3				3.1					3.3					3.3					2.7					8.0
9.0	3.3	3.3				3.1	3.1				3.3	3.3				3.3	3.3				2.7	2.7				9.0
10.0	3.3	3.2				3.1	3.1				3.3	3.3				3.3	3.3				2.7	2.7				10.0
11.0	3.3	3.0				3.1	3.1				3.3	3.1				3.3	3.1				2.7	2.7				11.0
12.0	3.2	2.9	2.5			3.1	2.9				3.3	2.9				3.3	3.0				2.7	2.7				12.0
14.0	2.9	2.6	2.3			3.1	2.7	2.3			3.1	2.7	2.3			3.1	2.7	2.3			2.7	2.7	2.3			14.0
16.0	2.6	2.4	2.1	1.8		2.8	2.5	2.2	1.9		2.8	2.5	2.2	1.9		2.8	2.5	2.2	1.9		2.7	2.5	2.2			16.0
18.0	2.4	2.2	1.9	1.7		2.6	2.3	2.0	1.8		2.6	2.3	2.0	1.8		2.6	2.3	2.0	1.8		2.7	2.4	2.0	1.8		18.0
20.0	2.2	2.0	1.8	1.6		2.4	2.1	1.9	1.7		2.4	2.1	1.9	1.7		2.4	2.1	1.9	1.7		2.5	2.2	1.9	1.7		20.0
22.0	2.0	1.9	1.7			2.2	2.0	1.8	1.6		2.2	2.0	1.8	1.6		2.2	2.0	1.8	1.6		2.3	2.1	1.8	1.6		22.0
24.0	1.8	1.7				2.1	1.9	1.7			2.1	1.9	1.7			2.1	1.9	1.7			2.2	2.0	1.8	1.6		24.0
26.0	1.7	1.6				1.9	1.8	1.6			1.9	1.8	1.6			1.9	1.8	1.6			2.0	1.9	1.7			26.0
28.0						1.8	1.6				1.8	1.6				1.8	1.6				1.9	1.8	1.6			28.0
30.0						1.6					1.6					1.6					1.9	1.7				30.0
32.0																					1.7	1.6				32.0
34.0																					1.6					34.0
36.0																										36.0
38.0																										38.0
40.0																										40.0
42.0																										42.0
44.0																										44.0
46.0																										46.0
48.0																										48.0
50.0																										50.0
52.0																										52.0
54.0																										54.0
56.0																										56.0
58.0																										58.0
60.0																										60.0
64.0																										64.0
1	0	0	0	0		0	0	0	0		0	0	0	0		0	0	0	0		0	0	0	0		1
2	0	0	0	0		0	0	0	0		0	0	0	0		46	46	46	46		0	0	0	0		2
3	0	0	0	0		0	0	0	0		46	46	46	46		0	0	0	0		0	0	0	0		3
4	0	0	0	0		46	46	46	46		0	0	0	0		0	0	0	0		0	0	0	0		4
5	0	0	0	0		0	0	0	0		0	0	0	0		0	0	0	0		46	46	46	46		5
6	0	0	0	0		0	0	0	0		0	0	0	0		0	0	0	0		46	46	46	46		6
ID	1	1	1	1		76	76	76	76		105	105	105	105		131	131	131	131		30	30	30	30		ID
[DEG]	0~84.7	0~84.7	0~84.7	0~84.7		23~84.7	36~84.7	47~84.7	63~84.7		23~84.7	36~84.7	47~84.7	63~84.7		23~84.7	36~84.7	47~84.7	63~84.7		21~84.7	33~84.7	49~84.7	63~84.7		[DEG]
	1	1	1	1		1	1	1	1		1	1	1	1		1	1	1	1		1	1	1	1		
	8.7t	8.7t	8.7t	8.7t		8.7t	8.7t	8.7t	8.7t		8.7t	8.7t	8.7t	8.7t		8.7t	8.7t	8.7t	8.7t		8.7t	8.7t	8.7t	8.7t		

m	18.8	18.8	18.8	18.8	18.8	18.8	18.8	18.8	18.8	18.8	18.8	18.8	18.8	18.8	18.8	22.6	22.6	22.6	22.6	22.6	26.3	26.3	26.3	26.3	26.3	m
°	5	15	30	45	60	5	15	30	45	60	5	15	30	45	60	5	15	30	45	60	5	15	30	45	60	°
3.0																										3.0
3.5																										3.5
4.0																										4.0
4.5																										4.5
5.0																										5.0
6.0	2.9					3.2					3.3					2.5										6.0
7.0	2.9					3.2					3.3					2.5					3.3					7.0
8.0	2.9					3.2					3.3					2.5					3.3					8.0
9.0	2.9	2.9				3.2	3.2				3.3	3.3				2.5					3.3					9.0
10.0	2.9	2.9				3.2	3.2				3.3	3.3				2.5	2.5				3.3	3.3				10.0
11.0	2.9	2.9				3.2	3.2				3.3	3.2				2.5	2.5				3.3	3.3				11.0
12.0	2.9	2.9				3.2	3.0				3.3	3.0				2.5	2.5				3.3	3.2				12.0
14.0	2.9	2.8	2.3			3.2	2.8	2.3			3.2	2.8	2.3			2.5	2.5	2.3			3.3	2.9	2.4			14.0
16.0	2.9	2.5	2.2	1.9		2.9	2.6	2.2	1.9		3.0	2.6	2.2	1.9		2.5	2.5	2.2			3.2	2.7	2.2			16.0
18.0	2.7	2.4	2.1	1.8		2.7	2.4	2.1	1.8		2.7	2.4	2.1	1.8		2.5	2.4	2.1	1.8		3.0	2.5	2.1	1.9		18.0
20.0	2.5	2.2	1.9	1.7		2.5	2.2	1.9	1.7		2.5	2.2	2.0	1.7		2.5	2.3	1.9	1.7		2.8	2.4	2.0	1.8		20.0
22.0	2.3	2.1	1.9	1.6		2.3	2.1	1.9	1.6		2.4	2.1	1.9	1.6		2.4	2.1	1.9	1.7		2.6	2.3	1.9	1.7		22.0
24.0	2.2	2.0	1.8	1.6		2.2	2.0	1.8	1.6		2.2	2.0	1.8	1.6		2.3	2.0	1.8	1.6		2.4	2.1	1.9	1.6		24.0
26.0	2.1	1.9	1.7			2.1	1.9	1.7			2.1	1.9	1.7			2.1	1.9	1.7	1.5		2.1	2.0	1.8	1.6		26.0
28.0	1.9	1.8	1.6			2.0	1.8	1.6			2.0	1.8	1.6			2.0	1.8	1.7			1.5	1.9	1.7	1.5		28.0
30.0	1.9	1.7				1.9	1.7				1.9	1.7				1.9	1.8	1.6			1.0	1.4	1.7			30.0
32.0	1.7	1.6				1.7	1.6				1.7	1.6				1.8	1.7					0.9	1.3			32.0
34.0	1.6					1.6					1.5					1.8	1.6									34.0
36.0																1.7										36.0
38.0																										38.0
40.0																										40.0
42.0																										42.0
44.0																										44.0
46.0																										46.0
48.0																										48.0
50.0																										50.0
52.0																										52.0
54.0																										54.0
56.0																										56.0
58.0																										58.0
60.0																										60.0
64.0																										64.0
1	0	0	0	0		0	0	0	0		0	0	0	0		0	0	0	0		92	92	92	92		1
2	0	0	0	0		0	0	0	0		46	46	46	46		0	0	0	0		92	92	92	92		2
3	0	0	0	0		46	46	46	46		46	46	46	46		0	0	0	0		0	0	0	0		3
4	46	46	46	46		46	46	46	46		0	0	0	0		0	0	0	0		0	0	0	0		4
5	46	46	46	46		0	0	0	0		0	0	0	0		46	46	46	46		0	0	0	0		5
6	0	0	0	0		0	0	0	0		0	0	0	0		92	92	92	92		0	0	0	0		6
ID	58	58	58	58		88	88	88	88		113	113	113	113		20	20	20	20		134	134	134	134		ID
[DEG]	21~84.7	32~84.7	49~84.7	63~84.7		21~84.7	32~84.7	49~84.7	63~84.7		20~84.7	32~84.7	49~84.7	63~84.7		28~84.7	37~84.7	51~84.7	63~84.7		48~84.7	48~84.7	52~84.7	62~84.7		[DEG]
	1	1	1	1		1	1	1	1		1	1	1	1		1	1	1	1		1	1	1	1		
	8.7t	8.7t	8.7t	8.7t		8.7t	8.7t	8.7t	8.7t		8.7t	8.7t	8.7t	8.7t		8.7t	8.7t	8.7t	8.7t		8.7t	8.7t	8.7t	8.7t		

FLJ	1.6m + 17.4m	15.3 t	8.0m x 5.0m	360 °	JPN

m	30.0	30.0	30.0	30.0	30.0	30.0	30.0	30.0	30.0	30.0	33.7	33.7	33.7	33.7	33.7	37.4	37.4	37.4	37.4	37.4	37.4	37.4	37.4	37.4	37.4	m
°	5	15	30	45	60	5	15	30	45	60	5	15	30	45	60	5	15	30	45	60	5	15	30	45	60	°
3.0																										3.0
3.5																										3.5
4.0																										4.0
4.5																										4.5
5.0																										5.0
6.0																										6.0
7.0																										7.0
8.0	2.3					3.2					3.1															8.0
9.0	2.3					3.2					3.1					2.4					2.5					9.0
10.0	2.3					3.2					3.1					2.4					2.5					10.0
11.0	2.3	2.3				3.2	3.2				3.1					2.4					2.5					11.0
12.0	2.3	2.3				3.2	3.2				3.1	3.1				2.4	2.4				2.5					12.0
14.0	2.3	2.3				3.2	2.9				3.1	3.0				2.4	2.4				2.5	2.5				14.0
16.0	2.3	2.3	2.2			3.2	2.8	2.3			3.1	2.8	2.3			2.4	2.4	2.2			2.5	2.5				16.0
18.0	2.3	2.3	2.1			3.1	2.6	2.2	1.9		3.1	2.6	2.2			2.4	2.4	2.2			2.5	2.5	2.1			18.0
20.0	2.3	2.3	2.0	1.8		2.9	2.4	2.1	1.8	1.5	2.9	2.5	2.1	1.8		2.4	2.4	2.1	1.8		2.5	2.4	2.0	1.8		20.0
22.0	2.3	2.2	1.9	1.7		2.7	2.3	2.0	1.7	1.5	2.7	2.3	2.0	1.8		2.4	2.4	2.0	1.8	1.5	2.5	2.2	1.9	1.7	1.5	22.0
24.0	2.3	2.1	1.8	1.7		2.5	2.2	1.9	1.7		2.6	2.2	1.9	1.7		2.4	2.2	1.9	1.7	1.5	2.5	2.1	1.8	1.7	1.5	24.0
26.0	2.3	2.0	1.8	1.6		2.0	2.1	1.8	1.6		1.9	2.1	1.8	1.6		1.9	2.2	1.8	1.7		2.4	2.1	1.8	1.6		26.0
28.0	2.2	1.9	1.7	1.6		1.4	1.8	1.8	1.6		1.3	1.8	1.8	1.6			1.8	1.8	1.6		2.2	2.0	1.7	1.6		28.0
30.0	2.1	1.8	1.6	1.5			1.3	1.7	1.5			1.2	1.7	1.5				1.7	1.6		2.1	1.9	1.7	1.5		30.0
32.0	2.0	1.8	1.6					1.2					1.2	1.5					1.5		2.0	1.8	1.6	1.5		32.0
34.0	1.9	1.7	1.6																		1.6	1.8	1.6	1.5		34.0
36.0		1.7	1.5																		1.3	1.5	1.5			36.0
38.0		1.5																			1.0	1.2	1.4			38.0
40.0		1.2																				0.9	1.1			40.0
42.0		0.9																								42.0
44.0																										44.0
46.0																										46.0
48.0																										48.0
50.0																										50.0
52.0																										52.0
54.0																										54.0
56.0																										56.0
58.0																										58.0
60.0																										60.0
64.0																										64.0
1	0	0	0	0		92	92	92	92	92	92	92	92	92		92	92	92	92	92	0	0	0	0	0	1
2	0	0	0	0		92	92	92	92	92	92	92	92	92		92	92	92	92	92	0	0	0	0	0	2
3	0	0	0	0		46	46	46	46	46	92	92	92	92		92	92	92	92	92	46	46	46	46	46	3
4	46	46	46	46		0	0	0	0	0	0	0	0	0		46	46	46	46	46	92	92	92	92	92	4
5	92	92	92	92		0	0	0	0	0	0	0	0	0		0	0	0	0	0	92	92	92	92	92	5
6	92	92	92	92		0	0	0	0	0	0	0	0	0		0	0	0	0	0	92	92	92	92	92	6
ID	22	22	22	22		116	116	116	116	116	110	110	110	110		93	93	93	93	93	24	24	24	24	24	ID
[DEG]	48~84.7	32~84.7	49~84.7	63~84.7		56~84.7	56~84.7	56~84.7	62~84.7	77~84.7	59~84.7	59~84.7	60~84.7	62~84.7		64~84.7	65~84.7	66~84.7	65~84.7	77~84.7	49~84.7	49~84.7	51~84.7	63~84.7	78~84.7	[DEG]
	1	1	1	1		1	1	1	1	1	1	1	1	1		1	1	1	1	1	1	1	1	1	1	
	8.7t	8.7t	8.7t	8.7t		8.7t	8.7t	8.7t	8.7t	8.7t	8.7t	8.7t	8.7t	8.7t		8.7t	8.7t	8.7t	8.7t	8.7t	8.7t	8.7t	8.7t	8.7t	8.7t	

m	41.2	41.2	41.2	41.2	41.2	44.9	44.9	44.9	44.9	44.9	44.9	44.9	44.9	44.9	44.9	48.6	48.6	48.6	48.6	48.6	48.6	48.6	48.6	48.6	48.6	m
°	5	15	30	45	60	5	15	30	45	60	5	15	30	45	60	5	15	30	45	60	5	15	30	45	60	°
3.0																										3.0
3.5																										3.5
4.0																										4.0
4.5																										4.5
5.0																										5.0
6.0																										6.0
7.0																										7.0
8.0																										8.0
9.0																										9.0
10.0	2.7										2.4															10.0
11.0	2.7					1.9					2.4					2.0					2.2					11.0
12.0	2.7					1.9					2.4					2.0					2.2					12.0
14.0	2.7	2.7				1.9	1.9				2.4	2.4				2.0	2.0				2.2	2.2				14.0
16.0	2.7	2.7				1.9	1.9				2.4	2.4				2.0	2.0				2.2	2.2				16.0
18.0	2.7	2.6	2.1			1.9	1.9	1.9			2.4	2.4	2.1			2.0	2.0				2.2	2.2				18.0
20.0	2.7	2.5	2.1	1.8		1.9	1.9	1.9			2.4	2.4	2.0			2.0	2.0	2.0			2.2	2.2	2.0			20.0
22.0	2.7	2.4	2.0	1.8	1.5	1.9	1.9	1.9	1.7		2.4	2.4	2.0	1.7		2.0	2.0	1.9	1.7		2.2	2.2	1.9	1.7		22.0
24.0	2.6	2.3	1.9	1.7	1.5	1.9	1.9	1.8	1.7	1.5	2.4	2.2	1.9	1.7	1.5	2.0	2.0	1.9	1.7	1.5	2.2	2.2	1.9	1.7	1.5	24.0
26.0	1.9	2.2	1.8	1.7		1.9	1.9	1.8	1.6	1.5	2.0	2.2	1.8	1.7	1.5	2.0	2.0	1.8	1.6	1.5		2.1	1.8	1.6	1.5	26.0
28.0		1.8	1.8	1.6		1.9	1.9	1.7	1.6			1.9	1.8	1.6		1.9	2.0	1.7	1.6				1.8	1.6		28.0
30.0			1.7	1.6		1.9	1.9	1.7	1.5				1.7	1.6			1.8	1.7	1.6				1.7	1.6		30.0
32.0				1.6		1.6	1.9	1.6	1.5					1.5				1.6	1.5					1.5		32.0
34.0						1.2	1.5	1.6	1.5										1.5							34.0
36.0							1.1	1.4	1.5																	36.0
38.0								1.1																		38.0
40.0																										40.0
42.0																										42.0
44.0																										44.0
46.0																										46.0
48.0																										48.0
50.0																										50.0
52.0																										52.0
54.0																										54.0
56.0																										56.0
58.0																										58.0
60.0																										60.0
64.0																										64.0
1	92	92	92	92	92	0	0	0	0	0	92	92	92	92	92	46	46	46	46	46	92	92	92	92	92	1
2	92	92	92	92	92	46	46	46	46	46	92	92	92	92	92	92	92	92	92	92	92	92	92	92	92	2
3	92	92	92	92	92	92	92	92	92	92	92	92	92	92	92	92	92	92	92	92	92	92	92	92	92	3
4	92	92	92	92	92	92	92	92	92	92	92	92	92	92	92	92	92	92	92	92	92	92	92	92	92	4
5	0	0	0	0	0	92	92	92	92	92	46	46	46	46	46	92	92	92	92	92	92	92	92	92	92	5
6	0	0	0	0	0	92	92	92	92	92	0	0	0	0	0	46	46	46	46	46	0	0	0	0	0	6
ID	83	83	83	83	83	26	26	26	26	26	65	65	65	65	65	38	38	38	38	38	49	49	49	49	49	ID
[DEG]	66~84.7	67~84.7	68~84.7	68~84.7	79~84.7	60~84.7	60~84.7	61~84.7	65~84.7	78~84.7	68~84.7	69~84.7	70~84.7	70~84.7	78~84.7	68~84.7	69~84.7	70~84.7	69~84.7	79~84.7	72~84.7	72~84.7	71~84.7	72~84.7	79~84.7	[DEG]
	1	1	1	1	1	1	1	1	1	1	1	1	1	1	1	1	1	1	1	1	1	1	1	1	1	
	8.7t	8.7t	8.7t	8.7t	8.7t	8.7t	8.7t	8.7t	8.7t	8.7t	8.7t	8.7t	8.7t	8.7t	8.7t	8.7t	8.7t	8.7t	8.7t	8.7t	8.7t	8.7t	8.7t	8.7t	8.7t	

フルオートラフィングジブ

FLJ	1.6m + 17.4m	15.3 t	8.0m x 5.0m	360 °	JPN

m	52.3	52.3	52.3	52.3	52.3	52.3	52.3	52.3	52.3	52.3	56.0	56.0	56.0	56.0	56.0	60.0	60.0	60.0	60.0	60.0						m
°	5	15	30	45	60	5	15	30	45	60	5	15	30	45	60	5	15	30	45	60						°
3.0																										3.0
3.5																										3.5
4.0																										4.0
4.5																										4.5
5.0																										5.0
6.0																										6.0
7.0																										7.0
8.0																										8.0
9.0																										9.0
10.0																										10.0
11.0																										11.0
12.0						2.0																				12.0
14.0	1.8					2.0					1.8															14.0
16.0	1.8	1.8				2.0	2.0				1.8	1.8				1.0										16.0
18.0	1.8	1.8				2.0	2.0				1.8	1.8				1.0	1.0									18.0
20.0	1.8	1.8	1.8			2.0	2.0	2.0			1.8	1.8				1.0	1.0									20.0
22.0	1.8	1.8	1.8			2.0	2.0	1.9			1.8	1.8	1.8			1.0	1.0	1.0								22.0
24.0	1.8	1.8	1.8	1.6		2.0	2.0	1.9	1.7		1.8	1.8	1.8	1.6		1.0	1.0	1.0								24.0
26.0	1.8	1.8	1.8	1.6	1.5		2.0	1.8	1.6	1.5		1.8	1.8	1.6	1.5		1.0	1.0	1.0							26.0
28.0	1.8	1.8	1.7	1.6	1.4			1.7	1.6	1.4			1.7	1.6	1.4			1.0	1.0	1.0						28.0
30.0		1.8	1.7	1.5				1.7	1.5				1.7	1.5					1.0	1.0						30.0
32.0			1.6	1.5					1.5					1.5												32.0
34.0				1.5																						34.0
36.0																										36.0
38.0																										38.0
40.0																										40.0
42.0																										42.0
44.0																										44.0
46.0																										46.0
48.0																										48.0
50.0																										50.0
52.0																										52.0
54.0																										54.0
56.0																										56.0
58.0																										58.0
60.0																										60.0
64.0																										64.0
1	46	46	46	46	46	92	92	92	92	92	92	92	92	92	92	100	100	100	100	100						1
2	92	92	92	92	92	92	92	92	92	92	92	92	92	92	92	100	100	100	100	100						2
3	92	92	92	92	92	92	92	92	92	92	92	92	92	92	92	100	100	100	100	100						3
4	92	92	92	92	92	92	92	92	92	92	92	92	92	92	92	100	100	100	100	100						4
5	92	92	92	92	92	92	92	92	92	92	92	92	92	92	92	100	100	100	100	100						5
6	92	92	92	92	92	46	46	46	46	46	92	92	92	92	92	100	100	100	100	100						6
ID	28	28	28	28	28	39	39	39	39	39	29	29	29	29	29	19	19	19	19	19						ID
[DEG]	70~84.7	70~84.7	71~84.7	71~84.7	78~84.7	73~84.7	74~84.7	73~84.7	73~84.7	78~84.7	74~84.7	75~84.7	74~84.7	75~84.7	79~84.7	75~84.7	75~84.7	77~84.7	77~84.7	78~84.7						[DEG]
	1	1	1	1	1	1	1	1	1	1	1	1	1	1	1	1	1	1	1	1						
	8.7t	8.7t	8.7t	8.7t	8.7t	8.7t	8.7t	8.7t	8.7t	8.7t	8.7t	8.7t	8.7t	8.7t	8.7t	8.7t	8.7t	8.7t	8.7t	8.7t						

FLJ	1.6m + 7.4m	11.9 t	8.0m x 7.5m	360 °	JPN

m	11.4	11.4	11.4	11.4	11.4	15.1	15.1	15.1	15.1	15.1	15.1	15.1	15.1	15.1	15.1	15.1	15.1	15.1	15.1	15.1	18.8	18.8	18.8	18.8	18.8	m
°	5	15	30	45	60	5	15	30	45	60	5	15	30	45	60	5	15	30	45	60	5	15	30	45	60	°
3.0	7.3					7.3					7.3					7.3					7.3					3.0
3.5	7.3					7.3					7.3					7.3					7.3					3.5
4.0	7.3	7.3				7.3	7.3				7.3	7.3				7.3	7.3				7.3					4.0
4.5	7.3	7.3				7.3	7.3				7.3	7.3				7.3	7.3				7.3					4.5
5.0	7.3	7.3	7.3			7.3	7.3				7.3	7.3				7.3	7.3				7.3	7.3				5.0
6.0	7.3	7.3	7.3			7.3	7.3	7.3			7.3	7.3	7.3			7.3	7.3	7.3			7.3	7.3	7.3			6.0
7.0	7.3	7.3	7.3	6.5	5.0	7.3	7.3	7.3	6.7		7.3	7.3	7.3	6.7		7.3	7.3	7.3	6.7		7.3	7.3	7.3			7.0
8.0	7.3	7.3	7.3	6.3	4.9	7.3	7.3	7.3	6.5	5.0	7.3	7.3	7.3	6.5	5.0	7.3	7.3	7.3	6.5	5.0	7.3	7.3	7.3	6.6	5.0	8.0
9.0	7.3	7.3	7.2	6.0		7.3	7.3	7.3	6.3	4.9	7.3	7.3	7.3	6.3	4.9	7.3	7.3	7.3	6.3	4.9	7.3	7.3	7.3	6.4	4.9	9.0
10.0	7.3	7.3	6.9	5.9		7.3	7.3	7.3	6.1		7.3	7.3	7.3	6.1		7.3	7.3	7.3	6.1		7.3	7.3	7.3	6.3	4.9	10.0
11.0	7.3	7.3	6.6	5.7		7.3	7.3	7.0	5.9		7.3	7.3	7.0	5.9		7.3	7.3	7.0	5.9		7.3	7.3	7.3	6.1		11.0
12.0	7.3	7.0	6.3			7.3	7.3	6.8	5.8		7.3	7.3	6.8	5.8		7.3	7.3	6.8	5.8		7.3	7.3	7.2	6.0		12.0
14.0	6.4	6.2	5.9			7.3	7.1	6.3			7.3	7.1	6.3			7.3	7.1	6.3			7.3	7.3	6.7	5.7		14.0
16.0	5.7	5.7				6.8	6.4	5.9			6.8	6.4	5.9			6.8	6.4	5.9			7.3	7.1	6.3			16.0
18.0						6.0	5.9				6.0	5.9				6.0	5.9				7.0	6.6	6.0			18.0
20.0						5.5					5.5					5.5					6.3	6.1				20.0
22.0																					5.8	5.7				22.0
24.0																					5.3					24.0
26.0																										26.0
28.0																										28.0
30.0																										30.0
32.0																										32.0
34.0																										34.0
36.0																										36.0
38.0																										38.0
40.0																										40.0
42.0																										42.0
44.0																										44.0
46.0																										46.0
48.0																										48.0
50.0																										50.0
52.0																										52.0
54.0																										54.0
56.0																										56.0
58.0																										58.0
60.0																										60.0
64.0																										64.0
1	0	0	0	0	0	0	0	0	0	0	0	0	0	0	0	0	0	0	0	0	0	0	0	0	0	1
2	0	0	0	0	0	0	0	0	0	0	0	0	0	0	0	46	46	46	46	46	0	0	0	0	0	2
3	0	0	0	0	0	0	0	0	0	0	46	46	46	46	46	0	0	0	0	0	0	0	0	0	0	3
4	0	0	0	0	0	46	46	46	46	46	0	0	0	0	0	0	0	0	0	0	0	0	0	0	0	4
5	0	0	0	0	0	0	0	0	0	0	0	0	0	0	0	0	0	0	0	0	46	46	46	46	46	5
6	0	0	0	0	0	0	0	0	0	0	0	0	0	0	0	0	0	0	0	0	46	46	46	46	46	6
ID	1	1	1	1	1	76	76	76	76	76	105	105	105	105	105	131	131	131	131	131	30	30	30	30	30	ID
[DEG]	0~84.7	0~84.7	0~84.7	0~84.7	0~84.7	24~84.7	37~84.7	48~84.7	64~84.7	75~84.7	24~84.7	37~84.7	48~84.7	64~84.7	75~84.7	24~84.7	37~84.7	48~84.7	64~84.7	75~84.7	22~84.7	34~84.7	50~84.7	63~84.7	75~84.7	[DEG]
	1	1	1	1	1	1	1	1	1	1	1	1	1	1	1	1	1	1	1	1	1	1	1	1	1	
	8.7t	8.7t	8.7t	8.7t	8.7t	8.7t	8.7t	8.7t	8.7t	8.7t	8.7t	8.7t	8.7t	8.7t	8.7t	8.7t	8.7t	8.7t	8.7t	8.7t	8.7t	8.7t	8.7t	8.7t	8.7t	

FLJ	1.6m + 7.4m	11.9 t	8.0m x 7.5m	360 °	JPN

m	18.8	18.8	18.8	18.8	18.8	18.8	18.8	18.8	18.8	18.8	18.8	18.8	18.8	18.8	18.8	22.6	22.6	22.6	22.6	22.6	26.3	26.3	26.3	26.3	26.3	m
°	5	15	30	45	60	5	15	30	45	60	5	15	30	45	60	5	15	30	45	60	5	15	30	45	60	°
3.0	7.3					7.3					7.3															3.0
3.5	7.3					7.3					7.3															3.5
4.0	7.3					7.3	7.3				7.3	7.3				7.3										4.0
4.5	7.3					7.3	7.3				7.3	7.3				7.3										4.5
5.0	7.3	7.3				7.3	7.3				7.3	7.3				7.3	7.3				7.3					5.0
6.0	7.3	7.3	7.3			7.3	7.3	7.3			7.3	7.3	7.3			7.3	7.3				7.3	7.3				6.0
7.0	7.3	7.3	7.3	6.9		7.3	7.3	7.3	6.9		7.3	7.3	7.3	6.9		7.3	7.3	7.3			7.3	7.3				7.0
8.0	7.3	7.3	7.3	6.6	5.0	7.3	7.3	7.3	6.6	5.0	7.3	7.3	7.3	6.6	5.0	7.3	7.3	7.3	6.8		7.3	7.3	7.3			8.0
9.0	7.3	7.3	7.3	6.4	4.9	7.3	7.3	7.3	6.4	4.9	7.3	7.3	7.3	6.4	4.9	7.3	7.3	7.3	6.6	5.0	7.3	7.3	7.3	6.7	5.0	9.0
10.0	7.3	7.3	7.3	6.3	4.9	7.3	7.3	7.3	6.3	4.9	7.3	7.3	7.3	6.3	4.9	7.3	7.3	7.3	6.4	4.9	7.3	7.3	7.3	6.5	4.9	10.0
11.0	7.3	7.3	7.3	6.1		7.3	7.3	7.3	6.1		7.3	7.3	7.3	6.1		7.3	7.3	7.3	6.3	4.8	7.3	7.3	7.3	6.4	4.9	11.0
12.0	7.3	7.3	7.2	6.0		7.3	7.3	7.2	6.0		7.3	7.3	7.2	6.0		7.3	7.3	7.3	6.1		7.3	7.3	7.3	6.3	4.8	12.0
14.0	7.3	7.3	6.7	5.7		7.3	7.3	6.7	5.7		7.3	7.3	6.7	5.7		7.2	6.9	6.5	5.9		7.3	7.3	7.3	6.0		14.0
16.0	7.3	7.1	6.3			7.3	7.1	6.3			7.3	7.1	6.3			6.4	6.1	5.9	5.7		7.3	7.3	7.0	5.8		16.0
18.0	7.0	6.6	6.0			7.0	6.6	6.0			7.0	6.6	6.0			5.7	5.5	5.3			7.1	7.3	6.6	5.7		18.0
20.0	6.3	6.1				6.3	6.1				6.3	6.1				5.1	5.0	4.9			5.3	5.6	6.1			20.0
22.0	5.8	5.7				5.8	5.7				5.6	5.7				4.6	4.5	4.5			3.8	4.1	4.5			22.0
24.0	5.3					5.0					4.4					4.2	4.1				2.6	2.9	3.2			24.0
26.0																3.8	3.8				1.7	1.9				26.0
28.0																					0.9	1.0				28.0
30.0																										30.0
32.0																										32.0
34.0																										34.0
36.0																										36.0
38.0																										38.0
40.0																										40.0
42.0																										42.0
44.0																										44.0
46.0																										46.0
48.0																										48.0
50.0																										50.0
52.0																										52.0
54.0																										54.0
56.0																										56.0
58.0																										58.0
60.0																										60.0
64.0																										64.0
1	0	0	0	0	0	0	0	0	0	0	0	0	0	0	0	0	0	0	0	0	92	92	92	92	92	1
2	0	0	0	0	0	0	0	0	0	0	46	46	46	46	46	0	0	0	0	0	92	92	92	92	92	2
3	0	0	0	0	0	46	46	46	46	46	46	46	46	46	46	0	0	0	0	0	0	0	0	0	0	3
4	46	46	46	46	46	46	46	46	46	46	0	0	0	0	0	0	0	0	0	0	0	0	0	0	0	4
5	46	46	46	46	46	0	0	0	0	0	0	0	0	0	0	46	46	46	46	46	0	0	0	0	0	5
6	0	0	0	0	0	0	0	0	0	0	0	0	0	0	0	92	92	92	92	92	0	0	0	0	0	6
ID	58	58	58	58	58	88	88	88	88	88	113	113	113	113	113	20	20	20	20	20	134	134	134	134	134	ID
[DEG]	21~84.7	33~84.7	50~84.7	63~84.7	75~84.7	21~84.7	33~84.7	50~84.7	63~84.7	75~84.7	21~84.7	33~84.7	50~84.7	63~84.7	75~84.7	29~84.7	30~84.7	46~84.7	63~84.7	76~84.7	33~84.7	34~84.7	47~84.7	63~84.7	76~84.7	[DEG]
	1	1	1	1	1	1	1	1	1	1	1	1	1	1	1	1	1	1	1	1	1	1	1	1	1	
	8.7t	8.7t	8.7t	8.7t	8.7t	8.7t	8.7t	8.7t	8.7t	8.7t	8.7t	8.7t	8.7t	8.7t	8.7t	8.7t	8.7t	8.7t	8.7t	8.7t	8.7t	8.7t	8.7t	8.7t	8.7t	

m	30.0	30.0	30.0	30.0	30.0	30.0	30.0	30.0	30.0	30.0	33.7	33.7	33.7	33.7	33.7	37.4	37.4	37.4	37.4	37.4	37.4	37.4	37.4	37.4	37.4	m
°	5	15	30	45	60	5	15	30	45	60	5	15	30	45	60	5	15	30	45	60	5	15	30	45	60	°
3.0																										3.0
3.5																										3.5
4.0																										4.0
4.5																										4.5
5.0	7.3					7.3																				5.0
6.0	7.3	7.3				7.3	7.3				7.3															6.0
7.0	7.3	7.3				7.3	7.3				7.3	7.3				7.1					7.3					7.0
8.0	7.3	7.3	7.3			7.3	7.3	7.3			7.3	7.3				7.1	7.1				7.3	7.3				8.0
9.0	7.3	7.3	7.3			7.3	7.3	7.3	6.8		7.3	7.3	7.3			7.1	7.1				7.3	7.3				9.0
10.0	7.3	7.3	7.3	6.6	5.0	7.3	7.3	7.3	6.6	5.0	7.3	7.3	7.3	6.7		7.1	7.1	7.1			7.3	7.3	7.3			10.0
11.0	7.3	7.3	7.3	6.5	4.9	7.3	7.3	7.3	6.5	4.9	7.3	7.3	7.3	6.6	4.9	7.1	7.1	7.1	6.7	5.0	7.3	7.3	7.2	6.7		11.0
12.0	7.3	7.3	7.1	6.4	4.9	7.3	7.3	7.3	6.4	4.9	7.3	7.3	7.3	6.5	4.9	7.1	7.1	7.1	6.6	4.9	7.3	7.3	6.9	6.4	4.9	12.0
14.0	6.8	6.6	6.3	6.1		7.3	7.3	7.3	6.1		7.3	7.3	7.3	6.2	4.8	7.1	7.1	7.1	6.3	4.8	6.9	6.6	6.2	5.9	4.8	14.0
16.0	6.0	5.8	5.6	5.5		7.3	7.3	7.2	5.9		7.3	7.3	7.3	6.0		7.1	7.1	7.1	6.1		6.1	5.9	5.7	5.5		16.0
18.0	5.3	5.2	5.1	5.0		7.1	7.3	6.9	5.8		7.1	7.3	7.1	5.9		7.1	7.1	7.1	6.0		5.5	5.4	5.2	5.0		18.0
20.0	4.8	4.7	4.6	4.5		5.3	5.7	6.2	5.6		5.2	5.7	6.2	5.7		5.4	5.8	6.4	5.8		5.0	4.9	4.7	4.6		20.0
22.0	4.3	4.3	4.2			3.8	4.1	4.6			3.8	4.2	4.6	4.9		3.9	4.3	4.8	5.1		4.6	4.5	4.3	4.3		22.0
24.0	3.9	3.9	3.8			2.6	2.9	3.3			2.6	2.9	3.3			2.8	3.1	3.5	3.8		4.2	4.1	4.0	4.0		24.0
26.0	3.5	3.5	3.5			1.7	1.9	2.2			1.7	1.9	2.2			1.8	2.1	2.4			3.9	3.8	3.7			26.0
28.0	3.2	3.1				0.9	1.1				0.9	1.1	1.3			1.0	1.2	1.5			3.6	3.5	3.5			28.0
30.0	2.8	2.8																			2.9	3.1	3.2			30.0
32.0	2.5	2.5																			2.3	2.4	2.6			32.0
34.0	2.1																				1.8	1.9				34.0
36.0																					1.3	1.4				36.0
38.0																					0.9	1.0				38.0
40.0																										40.0
42.0																										42.0
44.0																										44.0
46.0																										46.0
48.0																										48.0
50.0																										50.0
52.0																										52.0
54.0																										54.0
56.0																										56.0
58.0																										58.0
60.0																										60.0
64.0																										64.0
1	0	0	0	0	0	92	92	92	92	92	92	92	92	92	92	92	92	92	92	92	0	0	0	0	0	1
2	0	0	0	0	0	92	92	92	92	92	92	92	92	92	92	92	92	92	92	92	0	0	0	0	0	2
3	0	0	0	0	0	46	46	46	46	46	92	92	92	92	92	92	92	92	92	92	46	46	46	46	46	3
4	46	46	46	46	46	0	0	0	0	0	0	0	0	0	0	46	46	46	46	46	92	92	92	92	92	4
5	92	92	92	92	92	0	0	0	0	0	0	0	0	0	0	0	0	0	0	0	92	92	92	92	92	5
6	92	92	92	92	92	0	0	0	0	0	0	0	0	0	0	0	0	0	0	0	92	92	92	92	92	6
ID	22	22	22	22	22	116	116	116	116	116	110	110	110	110	110	93	93	93	93	93	24	24	24	24	24	ID
[DEG]	24~84.7	32~84.7	50~84.7	63~84.7	78~84.7	41~84.7	43~84.7	49~84.7	63~84.7	78~84.7	47~84.7	49~84.7	50~84.7	62~84.7	76~84.7	52~84.7	53~84.7	55~84.7	62~84.7	78~84.7	33~84.7	34~84.7	48~84.7	63~84.7	78~84.7	[DEG]
	1	1	1	1	1	1	1	1	1	1	1	1	1	1	1	1	1	1	1	1	1	1	1	1	1	
	8.7t	8.7t	8.7t	8.7t	8.7t	8.7t	8.7t	8.7t	8.7t	8.7t	8.7t	8.7t	8.7t	8.7t	8.7t	8.7t	8.7t	8.7t	8.7t	8.7t	8.7t	8.7t	8.7t	8.7t	8.7t	

フルオートラフィングジブ

FLJ	1.6m + 7.4m	11.9 t	8.0m x 7.5m	360 °	JPN

m	41.2	41.2	41.2	41.2	41.2	44.9	44.9	44.9	44.9	44.9	44.9	44.9	44.9	44.9	44.9	48.6	48.6	48.6	48.6	48.6	48.6	48.6	48.6	48.6	48.6	m
°	5	15	30	45	60	5	15	30	45	60	5	15	30	45	60	5	15	30	45	60	5	15	30	45	60	°
3.0																										3.0
3.5																										3.5
4.0																										4.0
4.5																										4.5
5.0																										5.0
6.0																										6.0
7.0	7.3																									7.0
8.0	7.3										6.5															8.0
9.0	7.3	7.3				4.6					6.5					4.8					5.4					9.0
10.0	7.3	7.3	7.3			4.6	4.6				6.5	6.5				4.8					5.4					10.0
11.0	7.3	7.3	7.3			4.6	4.6				6.5	6.5	6.5			4.8	4.8				5.4	5.4				11.0
12.0	7.3	7.3	7.3	6.6	4.9	4.6	4.6	4.6			6.5	6.5	6.5			4.8	4.8	4.8			5.4	5.4	5.4			12.0
14.0	7.3	7.3	7.3	6.4	4.9	4.6	4.6	4.6	4.6	4.6	6.5	6.5	6.5	6.5	4.9	4.8	4.8	4.8	4.8	4.8	5.4	5.4	5.4	5.4	4.9	14.0
16.0	7.3	7.3	7.3	6.2		4.6	4.6	4.6	4.6	4.6	6.5	6.5	6.5	6.3	4.8	4.8	4.8	4.8	4.8	4.8	5.4	5.4	5.4	5.4	4.8	16.0
18.0	7.3	7.3	7.2	6.1		4.6	4.6	4.6	4.6		6.5	6.5	6.5	6.1		4.8	4.8	4.8	4.8		5.4	5.4	5.4	5.4		18.0
20.0	5.5	6.0	6.5	5.9		4.6	4.6	4.6	4.6		5.8	6.2	6.5	6.0		4.8	4.8	4.8	4.8		5.4	5.4	5.4	5.4		20.0
22.0	4.1	4.5	4.9	5.3		4.6	4.5	4.3	4.2		4.3	4.7	5.2	5.5		4.8	4.8	4.8	4.7		4.5	4.9	5.3	5.4		22.0
24.0	2.9	3.2	3.6	3.9		4.3	4.2	4.0	4.0		3.1	3.4	3.9	4.2		4.0	4.3	4.6	4.5		3.3	3.6	4.1	4.4		24.0
26.0	1.9	2.2	2.6	2.8		3.9	3.9	3.8	3.7		2.1	2.4	2.8	3.0		3.0	3.3	3.6	3.9		2.3	2.6	3.0	3.2		26.0
28.0	1.1	1.4	1.7			3.1	3.3	3.5	3.5		1.3	1.6	1.9	2.1		2.2	2.4	2.7	2.9		1.5	1.8	2.1	2.3		28.0
30.0			0.9			2.4	2.6	2.8				0.9	1.1			1.5	1.7	2.0	2.1			1.0	1.3	1.5		30.0
32.0						1.8	1.9	2.1								0.9	1.1	1.3								32.0
34.0						1.2	1.4	1.5																		34.0
36.0							0.9	1.0																		36.0
38.0																										38.0
40.0																										40.0
42.0																										42.0
44.0																										44.0
46.0																										46.0
48.0																										48.0
50.0																										50.0
52.0																										52.0
54.0																										54.0
56.0																										56.0
58.0																										58.0
60.0																										60.0
64.0																										64.0
1	92	92	92	92	92	0	0	0	0	0	92	92	92	92	92	46	46	46	46	46	92	92	92	92	92	1
2	92	92	92	92	92	46	46	46	46	46	92	92	92	92	92	92	92	92	92	92	92	92	92	92	92	2
3	92	92	92	92	92	92	92	92	92	92	92	92	92	92	92	92	92	92	92	92	92	92	92	92	92	3
4	92	92	92	92	92	92	92	92	92	92	92	92	92	92	92	92	92	92	92	92	92	92	92	92	92	4
5	0	0	0	0	0	92	92	92	92	92	46	46	46	46	46	92	92	92	92	92	92	92	92	92	92	5
6	0	0	0	0	0	92	92	92	92	92	0	0	0	0	0	46	46	46	46	46	0	0	0	0	0	6
ID	83	83	83	83	83	26	26	26	26	26	65	65	65	65	65	38	38	38	38	38	49	49	49	49	49	ID
[DEG]	55~84.7	57~84.7	55~84.7	62~84.7	79~84.7	51~84.7	49~84.7	50~84.7	63~84.7	78~84.7	59~84.7	57~84.7	59~84.7	62~84.7	78~84.7	56~84.7	58~84.7	59~84.7	62~84.7	79~84.7	61~84.7	60~84.7	61~84.7	62~84.7	79~84.7	[DEG]
	1	1	1	1	1	1	1	1	1	1	1	1	1	1	1	1	1	1	1	1	1	1	1	1	1	
	8.7t	8.7t	8.7t	8.7t	8.7t	8.7t	8.7t	8.7t	8.7t	8.7t	8.7t	8.7t	8.7t	8.7t	8.7t	8.7t	8.7t	8.7t	8.7t	8.7t	8.7t	8.7t	8.7t	8.7t	8.7t	

m	52.3	52.3	52.3	52.3	52.3	52.3	52.3	52.3	52.3	52.3	56.0	56.0	56.0	56.0	56.0	60.0	60.0	60.0	60.0	60.0						m
°	5	15	30	45	60	5	15	30	45	60	5	15	30	45	60	5	15	30	45	60						°
3.0																										3.0
3.5																										3.5
4.0																										4.0
4.5																										4.5
5.0																										5.0
6.0																										6.0
7.0																										7.0
8.0																										8.0
9.0																										9.0
10.0	3.9					4.4																				10.0
11.0	3.9					4.4					3.7															11.0
12.0	3.9	3.9				4.4	4.4				3.7															12.0
14.0	3.9	3.9	3.9			4.4	4.4	4.4			3.7	3.7	3.7			3.2	3.2									14.0
16.0	3.9	3.9	3.9	3.9	3.9	4.4	4.4	4.4	4.4	4.4	3.7	3.7	3.7	3.7	3.7	3.2	3.2	3.2	3.2							16.0
18.0	3.9	3.9	3.9	3.9	3.9	4.4	4.4	4.4	4.4	4.4	3.7	3.7	3.7	3.7	3.7	3.2	3.2	3.2	3.2	3.2						18.0
20.0	3.9	3.9	3.9	3.9		4.4	4.4	4.4	4.4		3.7	3.7	3.7	3.7		3.2	3.2	3.2	3.2	3.2						20.0
22.0	3.9	3.9	3.9	3.9		4.4	4.4	4.4	4.4		3.7	3.7	3.7	3.7		3.2	3.2	3.2	3.2							22.0
24.0	3.9	3.9	3.9	3.9		3.5	3.9	4.3	4.4		3.7	3.7	3.7	3.7		3.2	3.2	3.2	3.2							24.0
26.0	3.2	3.5	3.7	3.6		2.6	2.9	3.2	3.5		2.8	3.1	3.4	3.6		2.7	3.0	3.2	3.2							26.0
28.0	2.4	2.6	2.9	3.1		1.7	2.0	2.3	2.6		2.0	2.2	2.5	2.8		1.9	2.1	2.5	2.7							28.0
30.0	1.7	1.9	2.2	2.4		1.0	1.3	1.6	1.8		1.3	1.5	1.8	2.0			1.4	1.7	1.9							30.0
32.0	1.1	1.3	1.5					0.9					1.1	1.3												32.0
34.0			0.9																							34.0
36.0																										36.0
38.0																										38.0
40.0																										40.0
42.0																										42.0
44.0																										44.0
46.0																										46.0
48.0																										48.0
50.0																										50.0
52.0																										52.0
54.0																										54.0
56.0																										56.0
58.0																										58.0
60.0																										60.0
64.0																										64.0
1	46	46	46	46	46	92	92	92	92	92	92	92	92	92	92	100	100	100	100	100						1
2	92	92	92	92	92	92	92	92	92	92	92	92	92	92	92	100	100	100	100	100						2
3	92	92	92	92	92	92	92	92	92	92	92	92	92	92	92	100	100	100	100	100						3
4	92	92	92	92	92	92	92	92	92	92	92	92	92	92	92	100	100	100	100	100						4
5	92	92	92	92	92	92	92	92	92	92	92	92	92	92	92	100	100	100	100	100						5
6	92	92	92	92	92	46	46	46	46	46	92	92	92	92	92	100	100	100	100	100						6
ID	28	28	28	28	28	39	39	39	39	39	29	29	29	29	29	19	19	19	19	19						ID
[DEG]	59~84.7	60~84.7	59~84.7	65~84.7	78~84.7	62~84.7	63~84.7	62~84.7	65~84.7	78~84.7	64~84.7	65~84.7	64~84.7	65~84.7	79~84.7	68~84.7	67~84.7	68~84.7	69~84.7	79~84.7						[DEG]
	1	1	1	1	1	1	1	1	1	1	1	1	1	1	1	1	1	1	1	1						
	8.7t	8.7t	8.7t	8.7t	8.7t	8.7t	8.7t	8.7t	8.7t	8.7t	8.7t	8.7t	8.7t	8.7t	8.7t	8.7t	8.7t	8.7t	8.7t	8.7t						

FLJ	1.6m + 12.4m	11.9 t	8.0m x 7.5m	360 °	JPN

m	11.4	11.4	11.4	11.4	11.4	15.1	15.1	15.1	15.1	15.1	15.1	15.1	15.1	15.1	15.1	15.1	15.1	15.1	15.1	15.1	18.8	18.8	18.8	18.8	18.8	m
°	5	15	30	45	60	5	15	30	45	60	5	15	30	45	60	5	15	30	45	60	5	15	30	45	60	°
3.0	4.3																									3.0
3.5	4.3																									3.5
4.0	4.3					4.3					4.3					4.3					4.3					4.0
4.5	4.3					4.3					4.3					4.3					4.3					4.5
5.0	4.3					4.3					4.3					4.3					4.3					5.0
6.0	4.3	4.3				4.3	4.3				4.3	4.3				4.3	4.3				4.3					6.0
7.0	4.3	4.3				4.3	4.3				4.3	4.3				4.3	4.3				4.3	4.3				7.0
8.0	4.3	4.3				4.3	4.3				4.3	4.3				4.3	4.3				4.3	4.3				8.0
9.0	4.3	4.3	4.3			4.3	4.3	4.3			4.3	4.3	4.3			4.3	4.3	4.3			4.3	4.3				9.0
10.0	4.3	4.3	4.1			4.3	4.3	4.3			4.3	4.3	4.3			4.3	4.3	4.3			4.3	4.3	4.3			10.0
11.0	4.3	4.3	3.9	3.2		4.3	4.3	4.1	3.3		4.3	4.3	4.1	3.3		4.3	4.3	4.1	3.3		4.3	4.3	4.1			11.0
12.0	4.3	4.3	3.7	3.1		4.3	4.3	3.9	3.2		4.3	4.3	3.9	3.2		4.3	4.3	3.9	3.2		4.3	4.3	3.9	3.3		12.0
14.0	4.3	4.0	3.3	2.9		4.3	4.3	3.5	3.0		4.3	4.3	3.5	3.0		4.3	4.3	3.5	3.0		4.3	4.3	3.7	3.1		14.0
16.0	3.8	3.5	3.0	2.7		4.3	3.9	3.3	2.8		4.3	3.9	3.3	2.8		4.3	3.9	3.3	2.8		4.3	4.1	3.4	2.9		16.0
18.0	3.4	3.2	2.8			3.9	3.6	3.0	2.7		3.9	3.6	3.0	2.7		3.9	3.6	3.0	2.7		4.3	3.8	3.2	2.8		18.0
20.0	3.0	2.9				3.5	3.3	2.9			3.5	3.3	2.9			3.5	3.3	2.9			4.0	3.5	3.0	2.7		20.0
22.0	2.7					3.2	3.0				3.2	3.0				3.2	3.0				3.6	3.3	2.9			22.0
24.0						2.9	2.8				2.9	2.8				2.9	2.8				3.3	3.1	2.8			24.0
26.0																					3.0	2.9				26.0
28.0																					2.8					28.0
30.0																										30.0
32.0																										32.0
34.0																										34.0
36.0																										36.0
38.0																										38.0
40.0																										40.0
42.0																										42.0
44.0																										44.0
46.0																										46.0
48.0																										48.0
50.0																										50.0
52.0																										52.0
54.0																										54.0
56.0																										56.0
58.0																										58.0
60.0																										60.0
64.0																										64.0
1	0	0	0	0		0	0	0	0		0	0	0	0		0	0	0	0		0	0	0	0		1
2	0	0	0	0		0	0	0	0		0	0	0	0		46	46	46	46		0	0	0	0		2
3	0	0	0	0		0	0	0	0		46	46	46	46		0	0	0	0		0	0	0	0		3
4	0	0	0	0		46	46	46	46		0	0	0	0		0	0	0	0		0	0	0	0		4
5	0	0	0	0		0	0	0	0		0	0	0	0		0	0	0	0		46	46	46	46		5
6	0	0	0	0		0	0	0	0		0	0	0	0		0	0	0	0		46	46	46	46		6
ID	1	1	1	1		76	76	76	76		105	105	105	105		131	131	131	131		30	30	30	30		ID
[DEG]	0~84.7	0~84.7	0~84.7	0~84.7		29~84.7	32~84.7	51~84.7	60~84.7		29~84.7	31~84.7	51~84.7	60~84.7		29~84.7	31~84.7	51~84.7	60~84.7		26~84.7	37~84.7	46~84.7	60~84.7		[DEG]
	1	1	1	1		1	1	1	1		1	1	1	1		1	1	1	1		1	1	1	1		
	8.7t	8.7t	8.7t	8.7t		8.7t	8.7t	8.7t	8.7t		8.7t	8.7t	8.7t	8.7t		8.7t	8.7t	8.7t	8.7t		8.7t	8.7t	8.7t	8.7t		

m	18.8	18.8	18.8	18.8	18.8	18.8	18.8	18.8	18.8	18.8	18.8	18.8	18.8	18.8	18.8	22.6	22.6	22.6	22.6	22.6	26.3	26.3	26.3	26.3	26.3	m
°	5	15	30	45	60	5	15	30	45	60	5	15	30	45	60	5	15	30	45	60	5	15	30	45	60	°
3.0																										3.0
3.5																										3.5
4.0	4.3					4.3					4.3															4.0
4.5	4.3					4.3					4.3															4.5
5.0	4.3					4.3					4.3					4.3										5.0
6.0	4.3					4.3					4.3					4.3					4.3					6.0
7.0	4.3	4.3				4.3	4.3				4.3	4.3				4.3	4.3				4.3					7.0
8.0	4.3	4.3				4.3	4.3				4.3	4.3				4.3	4.3				4.3	4.3				8.0
9.0	4.3	4.3				4.3	4.3				4.3	4.3				4.3	4.3				4.3	4.3				9.0
10.0	4.3	4.3	4.3			4.3	4.3	4.3			4.3	4.3	4.3			4.3	4.3				4.3	4.3				10.0
11.0	4.3	4.3	4.1			4.3	4.3	4.2			4.3	4.3	4.2			4.3	4.3	4.1			4.3	4.3	4.3			11.0
12.0	4.3	4.3	4.0	3.3		4.3	4.3	4.0	3.3		4.3	4.3	4.0	3.3		4.3	4.3	4.0			4.3	4.3	4.2			12.0
14.0	4.3	4.3	3.7	3.1		4.3	4.3	3.7	3.1		4.3	4.3	3.7	3.1		4.3	4.3	3.7	3.1		4.3	4.3	3.9	3.2	2.7	14.0
16.0	4.3	4.1	3.5	2.9		4.3	4.2	3.5	2.9		4.3	4.2	3.5	2.9		4.3	4.2	3.5	3.0		4.3	4.3	3.7	3.0	2.6	16.0
18.0	4.3	3.8	3.2	2.8		4.3	3.8	3.2	2.8		4.3	3.9	3.2	2.8		4.3	3.9	3.3	2.9		4.3	4.2	3.5	2.9		18.0
20.0	4.0	3.6	3.0	2.7		4.0	3.6	3.0	2.7		4.0	3.6	3.0	2.7		4.2	3.7	3.1	2.8		4.3	4.0	3.3	2.8		20.0
22.0	3.6	3.3	2.9			3.6	3.3	2.9			3.6	3.3	2.9			3.9	3.4	3.0			4.3	3.7	3.2	2.7		22.0
24.0	3.3	3.1	2.8			3.3	3.1	2.8			3.3	3.1	2.8			3.6	3.3	2.9			3.9	3.5	3.0			24.0
26.0	3.0	2.9				3.0	2.9				3.0	2.9				3.4	3.1	2.8			2.9	3.3	2.9			26.0
28.0	2.8					2.8					2.8					3.2	3.0				2.1	2.4	2.8			28.0
30.0																2.9	2.8				1.4	1.6				30.0
32.0																2.7						1.0				32.0
34.0																										34.0
36.0																										36.0
38.0																										38.0
40.0																										40.0
42.0																										42.0
44.0																										44.0
46.0																										46.0
48.0																										48.0
50.0																										50.0
52.0																										52.0
54.0																										54.0
56.0																										56.0
58.0																										58.0
60.0																										60.0
64.0																										64.0
1	0	0	0	0		0	0	0	0		0	0	0	0		0	0	0	0		92	92	92	92	92	1
2	0	0	0	0		0	0	0	0		46	46	46	46		0	0	0	0		92	92	92	92	92	2
3	0	0	0	0		46	46	46	46		46	46	46	46		0	0	0	0		0	0	0	0	0	3
4	46	46	46	46		46	46	46	46		0	0	0	0		0	0	0	0		0	0	0	0	0	4
5	46	46	46	46		0	0	0	0		0	0	0	0		46	46	46	46		0	0	0	0	0	5
6	0	0	0	0		0	0	0	0		0	0	0	0		92	92	92	92		0	0	0	0	0	6
ID	58	58	58	58		88	88	88	88		113	113	113	113		20	20	20	20		134	134	134	134	134	ID
[DEG]	26~84.7	37~84.7	46~84.7	60~84.7		26~84.7	37~84.7	46~84.7	60~84.7		26~84.7	37~84.7	46~84.7	60~84.7		24~84.7	34~84.7	49~84.7	65~84.7		40~84.7	37~84.7	50~84.7	64~84.7	77~84.7	[DEG]
	1	1	1	1		1	1	1	1		1	1	1	1		1	1	1	1		1	1	1	1	1	
	8.7t	8.7t	8.7t	8.7t		8.7t	8.7t	8.7t	8.7t		8.7t	8.7t	8.7t	8.7t		8.7t	8.7t	8.7t	8.7t		8.7t	8.7t	8.7t	8.7t	8.7t	

フルオートラフィングジブ

FLJ	1.6m + 12.4m	11.9 t	8.0m x 7.5m	360 °	JPN

m	30.0	30.0	30.0	30.0	30.0	30.0	30.0	30.0	30.0	30.0	33.7	33.7	33.7	33.7	33.7	37.4	37.4	37.4	37.4	37.4	37.4	37.4	37.4	37.4	37.4	m
°	5	15	30	45	60	5	15	30	45	60	5	15	30	45	60	5	15	30	45	60	5	15	30	45	60	°
3.0																										3.0
3.5																										3.5
4.0																										4.0
4.5																										4.5
5.0																										5.0
6.0	4.0					4.3																				6.0
7.0	4.0					4.3					4.3					4.1										7.0
8.0	4.0					4.3					4.3					4.1					4.3					8.0
9.0	4.0	4.0				4.3	4.3				4.3	4.3				4.1					4.3					9.0
10.0	4.0	4.0				4.3	4.3				4.3	4.3				4.1	4.1				4.3	4.3				10.0
11.0	4.0	4.0				4.3	4.3	4.3			4.3	4.3				4.1	4.1				4.3	4.3				11.0
12.0	4.0	4.0	4.0			4.3	4.3	4.2			4.3	4.3	4.2			4.1	4.1				4.3	4.3				12.0
14.0	4.0	4.0	3.7	3.2		4.3	4.3	3.9	3.2		4.3	4.3	3.9	3.3		4.1	4.1	3.9			4.3	4.3	3.7			14.0
16.0	4.0	4.0	3.5	3.1		4.3	4.3	3.7	3.1		4.3	4.3	3.7	3.2	2.6	4.1	4.1	3.7	3.2	2.6	4.3	4.3	3.5	3.1		16.0
18.0	4.0	4.0	3.4	3.0		4.3	4.3	3.5	3.0		4.3	4.3	3.6	3.0	2.6	4.1	4.1	3.6	3.1	2.6	4.3	4.1	3.4	3.0		18.0
20.0	4.0	3.8	3.2	2.9		4.3	4.1	3.4	2.9		4.3	4.1	3.4	2.9		4.1	4.1	3.4	3.0		4.3	3.9	3.2	2.9		20.0
22.0	4.0	3.6	3.1	2.8		4.3	3.8	3.2	2.8		4.3	3.9	3.3	2.8		4.1	3.9	3.3	2.9		4.2	3.7	3.1	2.8		22.0
24.0	3.7	3.4	3.0	2.7		3.8	3.6	3.1	2.7		3.7	3.7	3.1	2.8		3.8	3.8	3.2	2.8		3.9	3.5	3.0	2.7		24.0
26.0	3.4	3.3	2.9			2.8	3.2	3.0			2.7	3.2	3.0	2.7		2.8	3.3	3.0	2.7		3.6	3.4	2.9	2.7		26.0
28.0	3.1	3.1	2.8			2.0	2.3	2.8			1.9	2.3	2.8			1.9	2.4	2.9	2.7		3.3	3.2	2.8	2.6		28.0
30.0	2.8	2.8	2.7			1.3	1.6	2.0			1.2	1.5	2.0			1.2	1.6	2.1			3.1	3.0	2.7			30.0
32.0	2.5	2.5	2.5				0.9	1.2				0.9	1.2				1.0	1.4			2.9	2.8	2.7			32.0
34.0	2.2	2.2																			2.4	2.6	2.6			34.0
36.0		2.0																			1.9	2.1	2.3			36.0
38.0																					1.5	1.6				38.0
40.0																					1.1	1.2				40.0
42.0																						0.9				42.0
44.0																										44.0
46.0																										46.0
48.0																										48.0
50.0																										50.0
52.0																										52.0
54.0																										54.0
56.0																										56.0
58.0																										58.0
60.0																										60.0
64.0																										64.0
1	0	0	0	0		92	92	92	92		92	92	92	92	92	92	92	92	92	92	0	0	0	0		1
2	0	0	0	0		92	92	92	92		92	92	92	92	92	92	92	92	92	92	0	0	0	0		2
3	0	0	0	0		46	46	46	46		92	92	92	92	92	92	92	92	92	92	46	46	46	46		3
4	46	46	46	46		0	0	0	0		0	0	0	0	0	46	46	46	46	46	92	92	92	92		4
5	92	92	92	92		0	0	0	0		0	0	0	0	0	0	0	0	0	0	92	92	92	92		5
6	92	92	92	92		0	0	0	0		0	0	0	0	0	0	0	0	0	0	92	92	92	92		6
ID	22	22	22	22		116	116	116	116		110	110	110	110	110	93	93	93	93	93	24	24	24	24		ID
[DEG]	39~84.7	36~84.7	47~84.7	64~84.7		46~84.7	44~84.7	46~84.7	64~84.7		51~84.7	49~84.7	52~84.7	64~84.7	77~84.7	54~84.7	53~84.7	56~84.7	64~84.7	79~84.7	39~84.7	36~84.7	50~84.7	64~84.7		[DEG]
	1	1	1	1		1	1	1	1		1	1	1	1	1	1	1	1	1	1	1	1	1	1		
	8.7t	8.7t	8.7t	8.7t		8.7t	8.7t	8.7t	8.7t		8.7t	8.7t	8.7t	8.7t	8.7t	8.7t	8.7t	8.7t	8.7t	8.7t	8.7t	8.7t	8.7t	8.7t		

m	41.2	41.2	41.2	41.2	41.2	44.9	44.9	44.9	44.9	44.9	44.9	44.9	44.9	44.9	44.9	48.6	48.6	48.6	48.6	48.6	48.6	48.6	48.6	48.6	48.6	m
°	5	15	30	45	60	5	15	30	45	60	5	15	30	45	60	5	15	30	45	60	5	15	30	45	60	°
3.0																										3.0
3.5																										3.5
4.0																										4.0
4.5																										4.5
5.0																										5.0
6.0																										6.0
7.0																										7.0
8.0	4.3																									8.0
9.0	4.3										4.0															9.0
10.0	4.3					3.0					4.0					3.2					3.6					10.0
11.0	4.3	4.3				3.0					4.0	4.0				3.2					3.6					11.0
12.0	4.3	4.3				3.0	3.0				4.0	4.0				3.2	3.2				3.6	3.6				12.0
14.0	4.3	4.3	3.9			3.0	3.0				4.0	4.0				3.2	3.2				3.6	3.6				14.0
16.0	4.3	4.3	3.7	3.2		3.0	3.0	3.0			4.0	4.0	3.7			3.2	3.2	3.2			3.6	3.6	3.6			16.0
18.0	4.3	4.3	3.5	3.1	2.6	3.0	3.0	3.0	2.9		4.0	4.0	3.5	3.0	2.6	3.2	3.2	3.2	3.0		3.6	3.6	3.5	3.0		18.0
20.0	4.3	4.1	3.4	3.0	2.6	3.0	3.0	3.0	2.9		4.0	4.0	3.4	2.9	2.6	3.2	3.2	3.2	2.9	2.6	3.6	3.6	3.3	2.9	2.6	20.0
22.0	4.3	4.0	3.3	2.9		3.0	3.0	3.0	2.8		4.0	3.9	3.2	2.9		3.2	3.2	3.2	2.8	2.5	3.6	3.6	3.2	2.8	2.5	22.0
24.0	3.8	3.8	3.2	2.8		3.0	3.0	3.0	2.7		4.0	3.7	3.1	2.8		3.2	3.2	3.1	2.7		3.6	3.6	3.1	2.8		24.0
26.0	2.8	3.3	3.0	2.7		3.0	3.0	2.9	2.6		3.0	3.5	3.0	2.7		3.2	3.2	3.0	2.7		3.1	3.5	3.0	2.7		26.0
28.0	2.0	2.4	2.9	2.7		3.0	3.0	2.8	2.6		2.1	2.6	2.9	2.7		2.9	3.2	2.9	2.6		2.3	2.7	2.9	2.6		28.0
30.0	1.3	1.7	2.2	2.5		3.0	3.0	2.7	2.5		1.4	1.8	2.3	2.6		2.2	2.5	2.8	2.6		1.5	1.9	2.4	2.6		30.0
32.0		1.0	1.4			2.4	2.7	2.7	2.5			1.2	1.6	1.9		1.6	1.9	2.3	2.5		0.9	1.3	1.7	2.1		32.0
34.0						1.8	2.1	2.4					1.0			1.0	1.3	1.7	1.9				1.1	1.4		34.0
36.0						1.4	1.6	1.9										1.1								36.0
38.0						1.0	1.1	1.4																		38.0
40.0								1.0																		40.0
42.0																										42.0
44.0																										44.0
46.0																										46.0
48.0																										48.0
50.0																										50.0
52.0																										52.0
54.0																										54.0
56.0																										56.0
58.0																										58.0
60.0																										60.0
64.0																										64.0
1	92	92	92	92	92	0	0	0	0		92	92	92	92	92	46	46	46	46	46	92	92	92	92	92	1
2	92	92	92	92	92	46	46	46	46		92	92	92	92	92	92	92	92	92	92	92	92	92	92	92	2
3	92	92	92	92	92	92	92	92	92		92	92	92	92	92	92	92	92	92	92	92	92	92	92	92	3
4	92	92	92	92	92	92	92	92	92		92	92	92	92	92	92	92	92	92	92	92	92	92	92	92	4
5	0	0	0	0	0	92	92	92	92		46	46	46	46	46	92	92	92	92	92	92	92	92	92	92	5
6	0	0	0	0	0	92	92	92	92		0	0	0	0	0	46	46	46	46	46	0	0	0	0	0	6
ID	83	83	83	83	83	26	26	26	26		65	65	65	65	65	38	38	38	38	38	49	49	49	49	49	ID
[DEG]	58~84.7	57~84.7	59~84.7	64~84.7	78~84.7	51~84.7	53~84.7	52~84.7	64~84.7		60~84.7	60~84.7	59~84.7	64~84.7	79~84.7	58~84.7	60~84.7	60~84.7	64~84.7	78~84.7	60~84.7	62~84.7	62~84.7	64~84.7	78~84.7	[DEG]
	1	1	1	1	1	1	1	1	1		1	1	1	1	1	1	1	1	1	1	1	1	1	1	1	
	8.7t	8.7t	8.7t	8.7t	8.7t	8.7t	8.7t	8.7t	8.7t		8.7t	8.7t	8.7t	8.7t	8.7t	8.7t	8.7t	8.7t	8.7t	8.7t	8.7t	8.7t	8.7t	8.7t	8.7t	

FLJ	1.6m + 12.4m	11.9 t	8.0m x 7.5m	360 °	JPN

m	52.3	52.3	52.3	52.3	52.3	52.3	52.3	52.3	52.3	52.3	56.0	56.0	56.0	56.0	56.0	60.0	60.0	60.0	60.0	60.0	m
°	5	15	30	45	60	5	15	30	45	60	5	15	30	45	60	5	15	30	45	60	°
3.0																					3.0
3.5																					3.5
4.0																					4.0
4.5																					4.5
5.0																					5.0
6.0																					6.0
7.0																					7.0
8.0																					8.0
9.0																					9.0
10.0																					10.0
11.0	2.7					3.0															11.0
12.0	2.7					3.0					2.6										12.0
14.0	2.7	2.7				3.0	3.0				2.6	2.6				1.9					14.0
16.0	2.7	2.7	2.7			3.0	3.0	3.0			2.6	2.6				1.9	1.9				16.0
18.0	2.7	2.7	2.7			3.0	3.0	3.0			2.6	2.6	2.6			1.9	1.9	1.9			18.0
20.0	2.7	2.7	2.7	2.7	2.6	3.0	3.0	3.0	2.9	2.6	2.6	2.6	2.6	2.6		1.9	1.9	1.9	1.9		20.0
22.0	2.7	2.7	2.7	2.7	2.5	3.0	3.0	3.0	2.8	2.5	2.6	2.6	2.6	2.6	2.5	1.9	1.9	1.9	1.9	1.9	22.0
24.0	2.7	2.7	2.7	2.7		3.0	3.0	3.0	2.7		2.6	2.6	2.6	2.6	2.5	1.9	1.9	1.9	1.9	1.9	24.0
26.0	2.7	2.7	2.7	2.6		3.0	3.0	3.0	2.7		2.6	2.6	2.6	2.6		1.9	1.9	1.9	1.9		26.0
28.0	2.7	2.7	2.7	2.6		2.4	2.9	2.9	2.6		2.6	2.6	2.6	2.6		1.9	1.9	1.9	1.9		28.0
30.0	2.3	2.7	2.7	2.5		1.7	2.1	2.6	2.5		1.9	2.3	2.6	2.5		1.8	1.9	1.9	1.9		30.0
32.0	1.7	2.0	2.4	2.5		1.1	1.5	1.9	2.2		1.3	1.6	2.1	2.4			1.5	1.9	1.9		32.0
34.0	1.2	1.5	1.8	2.1			0.9	1.3	1.6			1.1	1.5	1.8				1.4	1.7		34.0
36.0		1.0	1.3	1.5					1.0					1.2							36.0
38.0																					38.0
40.0																					40.0
42.0																					42.0
44.0																					44.0
46.0																					46.0
48.0																					48.0
50.0																					50.0
52.0																					52.0
54.0																					54.0
56.0																					56.0
58.0																					58.0
60.0																					60.0
64.0																					64.0
1	46	46	46	46	46	92	92	92	92	92	92	92	92	92	92	100	100	100	100	100	1
2	92	92	92	92	92	92	92	92	92	92	92	92	92	92	92	100	100	100	100	100	2
3	92	92	92	92	92	92	92	92	92	92	92	92	92	92	92	100	100	100	100	100	3
4	92	92	92	92	92	92	92	92	92	92	92	92	92	92	92	100	100	100	100	100	4
5	92	92	92	92	92	92	92	92	92	92	92	92	92	92	92	100	100	100	100	100	5
6	92	92	92	92	92	46	46	46	46	46	92	92	92	92	92	100	100	100	100	100	6
ID	28	28	28	28	28	39	39	39	39	39	29	29	29	29	29	19	19	19	19	19	ID
[DEG]	61~84.7	60~84.7	63~84.7	64~84.7	79~84.7	63~84.7	62~84.7	65~84.7	63~84.7	79~84.7	65~84.7	65~84.7	67~84.7	66~84.7	79~84.7	69~84.7	69~84.7	69~84.7	70~84.7	79~84.7	[DEG]
	1	1	1	1	1	1	1	1	1	1	1	1	1	1	1	1	1	1	1	1	
	8.7t	8.7t	8.7t	8.7t	8.7t	8.7t	8.7t	8.7t	8.7t	8.7t	8.7t	8.7t	8.7t	8.7t	8.7t	8.7t	8.7t	8.7t	8.7t	8.7t	

FLJ	1.6m + 17.4m	11.9 t	8.0m x 7.5m	360 °	JPN

m	11.4	11.4	11.4	11.4	11.4	15.1	15.1	15.1	15.1	15.1	15.1	15.1	15.1	15.1	15.1	15.1	15.1	15.1	15.1	15.1	18.8	18.8	18.8	18.8	18.8	m
°	5	15	30	45	60	5	15	30	45	60	5	15	30	45	60	5	15	30	45	60	5	15	30	45	60	°
3.0																										3.0
3.5																										3.5
4.0																										4.0
4.5	3.3																									4.5
5.0	3.3					3.1					3.3					3.3										5.0
6.0	3.3					3.1					3.3					3.3					2.7					6.0
7.0	3.3					3.1					3.3					3.3					2.7					7.0
8.0	3.3	3.3				3.1					3.3					3.3					2.7					8.0
9.0	3.3	3.3				3.1	3.1				3.3	3.3				3.3	3.3				2.7	2.7				9.0
10.0	3.3	3.2				3.1	3.1				3.3	3.3				3.3	3.3				2.7	2.7				10.0
11.0	3.3	3.0				3.1	3.1				3.3	3.1				3.3	3.1				2.7	2.7				11.0
12.0	3.2	2.9	2.5			3.1	2.9				3.3	2.9				3.3	3.0				2.7	2.7				12.0
14.0	2.9	2.6	2.3			3.1	2.7	2.3			3.1	2.7	2.3			3.1	2.7	2.3			2.7	2.7	2.3			14.0
16.0	2.6	2.4	2.1	1.8		2.8	2.5	2.2	1.9		2.8	2.5	2.2	1.9		2.8	2.5	2.2	1.9		2.7	2.5	2.2			16.0
18.0	2.4	2.2	1.9	1.7		2.6	2.3	2.0	1.8		2.6	2.3	2.0	1.8		2.6	2.3	2.0	1.8		2.7	2.4	2.0	1.8		18.0
20.0	2.2	2.0	1.8	1.6		2.4	2.1	1.9	1.7		2.4	2.1	1.9	1.7		2.4	2.1	1.9	1.7		2.5	2.2	1.9	1.7		20.0
22.0	2.0	1.9	1.7			2.2	2.0	1.8	1.6		2.2	2.0	1.8	1.6		2.2	2.0	1.8	1.6		2.3	2.1	1.8	1.6		22.0
24.0	1.8	1.7				2.1	1.9	1.7			2.1	1.9	1.7			2.1	1.9	1.7			2.2	2.0	1.8	1.6		24.0
26.0	1.7	1.6				1.9	1.8	1.6			1.9	1.8	1.6			1.9	1.8	1.6			2.0	1.9	1.7			26.0
28.0						1.8	1.6				1.8	1.6				1.8	1.6				1.9	1.8	1.6			28.0
30.0						1.6					1.6					1.6					1.9	1.7				30.0
32.0																					1.7	1.6				32.0
34.0																					1.6					34.0
36.0																										36.0
38.0																										38.0
40.0																										40.0
42.0																										42.0
44.0																										44.0
46.0																										46.0
48.0																										48.0
50.0																										50.0
52.0																										52.0
54.0																										54.0
56.0																										56.0
58.0																										58.0
60.0																										60.0
64.0																										64.0
1	0	0	0	0		0	0	0	0		0	0	0	0		0	0	0	0		0	0	0	0		1
2	0	0	0	0		0	0	0	0		0	0	0	0		46	46	46	46		0	0	0	0		2
3	0	0	0	0		0	0	0	0		46	46	46	46		0	0	0	0		0	0	0	0		3
4	0	0	0	0		46	46	46	46		0	0	0	0		0	0	0	0		0	0	0	0		4
5	0	0	0	0		0	0	0	0		0	0	0	0		0	0	0	0		46	46	46	46		5
6	0	0	0	0		0	0	0	0		0	0	0	0		0	0	0	0		46	46	46	46		6
ID	1	1	1	1		76	76	76	76		105	105	105	105		131	131	131	131		30	30	30	30		ID
[DEG]	0~84.7	0~84.7	0~84.7	0~84.7		23~84.7	36~84.7	47~84.7	63~84.7		23~84.7	36~84.7	47~84.7	63~84.7		23~84.7	36~84.7	47~84.7	63~84.7		21~84.7	33~84.7	49~84.7	63~84.7		[DEG]
	1	1	1	1		1	1	1	1		1	1	1	1		1	1	1	1		1	1	1	1		
	8.7t	8.7t	8.7t	8.7t		8.7t	8.7t	8.7t	8.7t		8.7t	8.7t	8.7t	8.7t		8.7t	8.7t	8.7t	8.7t		8.7t	8.7t	8.7t	8.7t		

フルオートラフィングジブ

FLJ	1.6m + 17.4m	11.9 t	8.0m x 7.5m	360 °	JPN

m	18.8	18.8	18.8	18.8	18.8	18.8	18.8	18.8	18.8	18.8	18.8	18.8	18.8	18.8	18.8	22.6	22.6	22.6	22.6	22.6	26.3	26.3	26.3	26.3	26.3	m
°	5	15	30	45	60	5	15	30	45	60	5	15	30	45	60	5	15	30	45	60	5	15	30	45	60	°
3.0																										3.0
3.5																										3.5
4.0																										4.0
4.5																										4.5
5.0																										5.0
6.0	2.9					3.2					3.3					2.5										6.0
7.0	2.9					3.2					3.3					2.5					3.3					7.0
8.0	2.9					3.2					3.3					2.5					3.3					8.0
9.0	2.9	2.9				3.2	3.2				3.3	3.3				2.5					3.3					9.0
10.0	2.9	2.9				3.2	3.2				3.3	3.3				2.5	2.5				3.3	3.3				10.0
11.0	2.9	2.9				3.2	3.2				3.3	3.2				2.5	2.5				3.3	3.3				11.0
12.0	2.9	2.9				3.2	3.0				3.3	3.0				2.5	2.5				3.3	3.2				12.0
14.0	2.9	2.8	2.3			3.2	2.8	2.3			3.2	2.8	2.3			2.5	2.5	2.3			3.3	2.9	2.4			14.0
16.0	2.9	2.5	2.2	1.9		2.9	2.6	2.2	1.9		3.0	2.6	2.2	1.9		2.5	2.5	2.2			3.2	2.7	2.2			16.0
18.0	2.7	2.4	2.1	1.8		2.7	2.4	2.1	1.8		2.7	2.4	2.1	1.8		2.5	2.4	2.1	1.8		3.0	2.5	2.1	1.9		18.0
20.0	2.5	2.2	1.9	1.7		2.5	2.2	1.9	1.7		2.5	2.2	2.0	1.7		2.5	2.3	1.9	1.7		2.8	2.4	2.0	1.8		20.0
22.0	2.3	2.1	1.9	1.6		2.3	2.1	1.9	1.6		2.4	2.1	1.9	1.6		2.4	2.1	1.9	1.7		2.6	2.3	1.9	1.7		22.0
24.0	2.2	2.0	1.8	1.6		2.2	2.0	1.8	1.6		2.2	2.0	1.8	1.6		2.3	2.0	1.8	1.6		2.4	2.1	1.9	1.6		24.0
26.0	2.1	1.9	1.7			2.1	1.9	1.7			2.1	1.9	1.7			2.1	1.9	1.7	1.5		2.3	2.0	1.8	1.6		26.0
28.0	1.9	1.8	1.6			2.0	1.8	1.6			2.0	1.8	1.6			2.0	1.8	1.7			2.2	1.9	1.7	1.5		28.0
30.0	1.9	1.7				1.9	1.7				1.9	1.7				1.9	1.8	1.6			2.1	1.9	1.7			30.0
32.0	1.7	1.6				1.7	1.6				1.7	1.6				1.8	1.7				1.7	1.8	1.6			32.0
34.0	1.6					1.6					1.6					1.8	1.6				1.1	1.4	1.6			34.0
36.0																1.7						0.9				36.0
38.0																										38.0
40.0																										40.0
42.0																										42.0
44.0																										44.0
46.0																										46.0
48.0																										48.0
50.0																										50.0
52.0																										52.0
54.0																										54.0
56.0																										56.0
58.0																										58.0
60.0																										60.0
64.0																										64.0
1	0	0	0	0		0	0	0	0		0	0	0	0		0	0	0	0		92	92	92	92		1
2	0	0	0	0		0	0	0	0		46	46	46	46		0	0	0	0		92	92	92	92		2
3	0	0	0	0		46	46	46	46		46	46	46	46		0	0	0	0		0	0	0	0		3
4	46	46	46	46		46	46	46	46		0	0	0	0		0	0	0	0		0	0	0	0		4
5	46	46	46	46		0	0	0	0		0	0	0	0		46	46	46	46		0	0	0	0		5
6	0	0	0	0		0	0	0	0		0	0	0	0		92	92	92	92		0	0	0	0		6
ID	58	58	58	58		88	88	88	88		113	113	113	113		20	20	20	20		134	134	134	134		ID
[DEG]	21~84.7	32~84.7	49~84.7	63~84.7		21~84.7	32~84.7	49~84.7	63~84.7		20~84.7	32~84.7	49~84.7	63~84.7		28~84.7	37~84.7	51~84.7	63~84.7		41~84.7	39~84.7	47~84.7	62~84.7		[DEG]
	1	1	1	1		1	1	1	1		1	1	1	1		1	1	1	1		1	1	1	1		
	8.7t	8.7t	8.7t	8.7t		8.7t	8.7t	8.7t	8.7t		8.7t	8.7t	8.7t	8.7t		8.7t	8.7t	8.7t	8.7t		8.7t	8.7t	8.7t	8.7t		

m	30.0	30.0	30.0	30.0	30.0	30.0	30.0	30.0	30.0	30.0	33.7	33.7	33.7	33.7	33.7	37.4	37.4	37.4	37.4	37.4	37.4	37.4	37.4	37.4	37.4	m
°	5	15	30	45	60	5	15	30	45	60	5	15	30	45	60	5	15	30	45	60	5	15	30	45	60	°
3.0																										3.0
3.5																										3.5
4.0																										4.0
4.5																										4.5
5.0																										5.0
6.0																										6.0
7.0																										7.0
8.0	2.3					3.2					3.1															8.0
9.0	2.3					3.2					3.1					2.4					2.5					9.0
10.0	2.3					3.2					3.1					2.4					2.5					10.0
11.0	2.3	2.3				3.2	3.2				3.1					2.4					2.5					11.0
12.0	2.3	2.3				3.2	3.2				3.1	3.1				2.4	2.4				2.5					12.0
14.0	2.3	2.3				3.2	2.9				3.1	3.0				2.4	2.4				2.5	2.5				14.0
16.0	2.3	2.3	2.2			3.2	2.8	2.3			3.1	2.8	2.3			2.4	2.4	2.2			2.5	2.5				16.0
18.0	2.3	2.3	2.1			3.1	2.6	2.2	1.9		3.1	2.6	2.2			2.4	2.4	2.2			2.5	2.5	2.1			18.0
20.0	2.3	2.3	2.0	1.8		2.9	2.4	2.1	1.8	1.5	2.9	2.5	2.1	1.8		2.4	2.4	2.1	1.8		2.5	2.4	2.0	1.8		20.0
22.0	2.3	2.2	1.9	1.7		2.7	2.3	2.0	1.7	1.5	2.7	2.3	2.0	1.8		2.4	2.4	2.0	1.8	1.5	2.5	2.2	1.9	1.7	1.5	22.0
24.0	2.3	2.1	1.8	1.7		2.5	2.2	1.9	1.7		2.6	2.2	1.9	1.7		2.4	2.2	1.9	1.7	1.5	2.5	2.1	1.8	1.7	1.5	24.0
26.0	2.3	2.0	1.8	1.6		2.4	2.1	1.8	1.6		2.4	2.1	1.8	1.6		2.4	2.2	1.8	1.7		2.4	2.1	1.8	1.6		26.0
28.0	2.2	1.9	1.7	1.6		2.3	2.0	1.8	1.6		2.3	2.0	1.8	1.6		2.4	2.1	1.8	1.6		2.2	2.0	1.7	1.6		28.0
30.0	2.1	1.8	1.6	1.5		2.2	1.9	1.7	1.5		2.0	1.9	1.7	1.5		2.0	2.0	1.7	1.6		2.1	1.9	1.7	1.5		30.0
32.0	2.0	1.8	1.6			1.5	1.8	1.6			1.4	1.8	1.7	1.5		1.4	1.9	1.7	1.5		2.1	1.8	1.6	1.5		32.0
34.0	1.9	1.7	1.6			1.0	1.3	1.6			0.9	1.3	1.6			0.9	1.3	1.6	1.5		2.0	1.8	1.6	1.5		34.0
36.0		1.7	1.5					1.2					1.2					1.2			1.9	1.7	1.5			36.0
38.0		1.6																			1.8	1.7	1.5			38.0
40.0		1.6																			1.6	1.6	1.5			40.0
42.0		1.5																			1.3	1.5	1.4			42.0
44.0																						1.1				44.0
46.0																										46.0
48.0																										48.0
50.0																										50.0
52.0																										52.0
54.0																										54.0
56.0																										56.0
58.0																										58.0
60.0																										60.0
64.0																										64.0
1	0	0	0	0		92	92	92	92	92	92	92	92	92		92	92	92	92	92	0	0	0	0	0	1
2	0	0	0	0		92	92	92	92	92	92	92	92	92		92	92	92	92	92	0	0	0	0	0	2
3	0	0	0	0		46	46	46	46	46	92	92	92	92		92	92	92	92	92	46	46	46	46	46	3
4	46	46	46	46		0	0	0	0	0	0	0	0	0		46	46	46	46	46	92	92	92	92	92	4
5	92	92	92	92		0	0	0	0	0	0	0	0	0		0	0	0	0	0	92	92	92	92	92	5
6	92	92	92	92		0	0	0	0	0	0	0	0	0		0	0	0	0	0	92	92	92	92	92	6
ID	22	22	22	22		116	116	116	116	116	110	110	110	110		93	93	93	93	93	24	24	24	24	24	ID
[DEG]	48~84.7	33~84.7	49~84.7	63~84.7		46~84.7	49~84.7	49~84.7	62~84.7	77~84.7	50~84.7	54~84.7	53~84.7	62~84.7		54~84.7	57~84.7	57~84.7	62~84.7	77~84.7	44~84.7	42~84.7	48~84.7	63~84.7	78~84.7	[DEG]
	1	1	1	1		1	1	1	1	1	1	1	1	1		1	1	1	1	1	1	1	1	1	1	
	8.7t	8.7t	8.7t	8.7t		8.7t	8.7t	8.7t	8.7t	8.7t	8.7t	8.7t	8.7t	8.7t		8.7t	8.7t	8.7t	8.7t	8.7t	8.7t	8.7t	8.7t	8.7t	8.7t	

FLJ	1.6m + 17.4m	11.9 t	8.0m x 7.5m	360 °	JPN

m	41.2	41.2	41.2	41.2	41.2	44.9	44.9	44.9	44.9	44.9	44.9	44.9	44.9	44.9	44.9	48.6	48.6	48.6	48.6	48.6	48.6	48.6	48.6	48.6	48.6	m
°	5	15	30	45	60	5	15	30	45	60	5	15	30	45	60	5	15	30	45	60	5	15	30	45	60	°
3.0																										3.0
3.5																										3.5
4.0																										4.0
4.5																										4.5
5.0																										5.0
6.0																										6.0
7.0																										7.0
8.0																										8.0
9.0																										9.0
10.0	2.7										2.4															10.0
11.0	2.7					1.9					2.4					2.0					2.2					11.0
12.0	2.7					1.9					2.4					2.0					2.2					12.0
14.0	2.7	2.7				1.9	1.9				2.4	2.4				2.0	2.0				2.2	2.2				14.0
16.0	2.7	2.7				1.9	1.9				2.4	2.4				2.0	2.0				2.2	2.2				16.0
18.0	2.7	2.6	2.1			1.9	1.9	1.9			2.4	2.4	2.1			2.0	2.0				2.2	2.2				18.0
20.0	2.7	2.5	2.1	1.8		1.9	1.9	1.9			2.4	2.4	2.0			2.0	2.0	2.0			2.2	2.2	2.0			20.0
22.0	2.7	2.4	2.0	1.8	1.5	1.9	1.9	1.9	1.7		2.4	2.4	2.0	1.7		2.0	2.0	1.9	1.7		2.2	2.2	1.9	1.7		22.0
24.0	2.6	2.3	1.9	1.7	1.5	1.9	1.9	1.8	1.7	1.5	2.4	2.2	1.9	1.7	1.5	2.0	2.0	1.9	1.7	1.5	2.2	2.2	1.9	1.7	1.5	24.0
26.0	2.5	2.2	1.8	1.7		1.9	1.9	1.8	1.6	1.5	2.4	2.2	1.8	1.7	1.5	2.0	2.0	1.8	1.6	1.5	2.2	2.1	1.8	1.6	1.5	26.0
28.0	2.4	2.1	1.8	1.6		1.9	1.9	1.7	1.6		2.4	2.1	1.8	1.6		2.0	2.0	1.7	1.6		2.2	2.1	1.8	1.6		28.0
30.0	2.0	2.0	1.7	1.6		1.9	1.9	1.7	1.5		2.1	2.0	1.7	1.6		2.0	2.0	1.7	1.6		2.2	2.0	1.7	1.6		30.0
32.0	1.4	1.9	1.7	1.6		1.9	1.9	1.6	1.5		1.5	1.9	1.7	1.5		2.0	1.9	1.6	1.5		1.6	1.9	1.7	1.5		32.0
34.0	0.9	1.3	1.6	1.5		1.9	1.8	1.6	1.5		1.0	1.4	1.6	1.5		1.6	1.8	1.6	1.5		1.0	1.5	1.6	1.5		34.0
36.0			1.3	1.5		1.9	1.7	1.5	1.5			0.9	1.4	1.5		1.1	1.5	1.6	1.5			1.0	1.5	1.5		36.0
38.0						1.5	1.7	1.5					0.9				1.0	1.5	1.4				1.0	1.3		38.0
40.0						1.1	1.3	1.5										1.0								40.0
42.0							1.0	1.3																		42.0
44.0								0.9																		44.0
46.0																										46.0
48.0																										48.0
50.0																										50.0
52.0																										52.0
54.0																										54.0
56.0																										56.0
58.0																										58.0
60.0																										60.0
64.0																										64.0
1	92	92	92	92	92	0	0	0	0	0	92	92	92	92	92	46	46	46	46	46	92	92	92	92	92	1
2	92	92	92	92	92	46	46	46	46	46	92	92	92	92	92	92	92	92	92	92	92	92	92	92	92	2
3	92	92	92	92	92	92	92	92	92	92	92	92	92	92	92	92	92	92	92	92	92	92	92	92	92	3
4	92	92	92	92	92	92	92	92	92	92	92	92	92	92	92	92	92	92	92	92	92	92	92	92	92	4
5	0	0	0	0	0	92	92	92	92	92	46	46	46	46	46	92	92	92	92	92	92	92	92	92	92	5
6	0	0	0	0	0	92	92	92	92	92	0	0	0	0	0	46	46	46	46	46	0	0	0	0	0	6
ID	83	83	83	83	83	26	26	26	26	26	65	65	65	65	65	38	38	38	38	38	49	49	49	49	49	ID
[DEG]	57~84.7	60~84.7	60~84.7	62~84.7	79~84.7	54~84.7	53~84.7	53~84.7	65~84.7	78~84.7	60~84.7	60~84.7	60~84.7	65~84.7	78~84.7	60~84.7	60~84.7	61~84.7	65~84.7	79~84.7	62~84.7	62~84.7	63~84.7	65~84.7	79~84.7	[DEG]
	1	1	1	1	1	1	1	1	1	1	1	1	1	1	1	1	1	1	1	1	1	1	1	1	1	
	8.7t	8.7t	8.7t	8.7t	8.7t	8.7t	8.7t	8.7t	8.7t	8.7t	8.7t	8.7t	8.7t	8.7t	8.7t	8.7t	8.7t	8.7t	8.7t	8.7t	8.7t	8.7t	8.7t	8.7t	8.7t	

m	52.3	52.3	52.3	52.3	52.3	52.3	52.3	52.3	52.3	52.3	56.0	56.0	56.0	56.0	56.0	60.0	60.0	60.0	60.0	60.0	m
°	5	15	30	45	60	5	15	30	45	60	5	15	30	45	60	5	15	30	45	60	°
3.0																					3.0
3.5																					3.5
4.0																					4.0
4.5																					4.5
5.0																					5.0
6.0																					6.0
7.0																					7.0
8.0																					8.0
9.0																					9.0
10.0																					10.0
11.0																					11.0
12.0						2.0															12.0
14.0	1.8					2.0					1.8										14.0
16.0	1.8	1.8				2.0	2.0				1.8	1.8				1.0					16.0
18.0	1.8	1.8				2.0	2.0				1.8	1.8				1.0	1.0				18.0
20.0	1.8	1.8	1.8			2.0	2.0	2.0			1.8	1.8				1.0	1.0				20.0
22.0	1.8	1.8	1.8			2.0	2.0	1.9			1.8	1.8	1.8			1.0	1.0	1.0			22.0
24.0	1.8	1.8	1.8	1.6		2.0	2.0	1.9	1.7		1.8	1.8	1.8	1.6		1.0	1.0	1.0			24.0
26.0	1.8	1.8	1.8	1.6	1.5	2.0	2.0	1.8	1.6	1.5	1.8	1.8	1.8	1.6	1.5	1.0	1.0	1.0	1.0		26.0
28.0	1.8	1.8	1.7	1.6	1.4	2.0	2.0	1.7	1.6	1.4	1.8	1.8	1.7	1.6	1.4	1.0	1.0	1.0	1.0	1.0	28.0
30.0	1.8	1.8	1.7	1.5		2.0	2.0	1.7	1.5		1.8	1.8	1.7	1.5		1.0	1.0	1.0	1.0	1.0	30.0
32.0	1.8	1.8	1.6	1.5		1.7	1.9	1.6	1.5		1.8	1.8	1.6	1.5		1.0	1.0	1.0	1.0		32.0
34.0	1.7	1.8	1.6	1.5		1.2	1.6	1.6	1.5		1.3	1.7	1.6	1.5			1.0	1.0	1.0		34.0
36.0	1.2	1.6	1.5	1.4			1.1	1.6	1.5			1.2	1.5	1.4				1.0	1.0		36.0
38.0		1.1	1.5	1.4				1.1	1.4				1.3	1.4					1.0		38.0
40.0			1.1	1.4					1.0					1.1							40.0
42.0																					42.0
44.0																					44.0
46.0																					46.0
48.0																					48.0
50.0																					50.0
52.0																					52.0
54.0																					54.0
56.0																					56.0
58.0																					58.0
60.0																					60.0
64.0																					64.0
1	46	46	46	46	46	92	92	92	92	92	92	92	92	92	92	100	100	100	100	100	1
2	92	92	92	92	92	92	92	92	92	92	92	92	92	92	92	100	100	100	100	100	2
3	92	92	92	92	92	92	92	92	92	92	92	92	92	92	92	100	100	100	100	100	3
4	92	92	92	92	92	92	92	92	92	92	92	92	92	92	92	100	100	100	100	100	4
5	92	92	92	92	92	92	92	92	92	92	92	92	92	92	92	100	100	100	100	100	5
6	92	92	92	92	92	46	46	46	46	46	92	92	92	92	92	100	100	100	100	100	6
ID	28	28	28	28	28	39	39	39	39	39	29	29	29	29	29	19	19	19	19	19	ID
[DEG]	62~84.7	63~84.7	63~84.7	65~84.7	78~84.7	64~84.7	65~84.7	65~84.7	65~84.7	78~84.7	66~84.7	67~84.7	68~84.7	67~84.7	79~84.7	69~84.7	70~84.7	71~84.7	71~84.7	78~84.7	[DEG]
	1	1	1	1	1	1	1	1	1	1	1	1	1	1	1	1	1	1	1	1	
	8.7t	8.7t	8.7t	8.7t	8.7t	8.7t	8.7t	8.7t	8.7t	8.7t	8.7t	8.7t	8.7t	8.7t	8.7t	8.7t	8.7t	8.7t	8.7t	8.7t	

フルオートラフィングジブ

FLJ	1.6m + 7.4m	11.9 t	8.0m x 6.2m	360 °	JPN

m	11.4	11.4	11.4	11.4	11.4	15.1	15.1	15.1	15.1	15.1	15.1	15.1	15.1	15.1	15.1	15.1	15.1	15.1	15.1	15.1	18.8	18.8	18.8	18.8	18.8	m
°	5	15	30	45	60	5	15	30	45	60	5	15	30	45	60	5	15	30	45	60	5	15	30	45	60	°
3.0	7.3					7.3					7.3					7.3					7.3					3.0
3.5	7.3					7.3					7.3					7.3					7.3					3.5
4.0	7.3	7.3				7.3	7.3				7.3	7.3				7.3	7.3				7.3					4.0
4.5	7.3	7.3				7.3	7.3				7.3	7.3				7.3	7.3				7.3					4.5
5.0	7.3	7.3	7.3			7.3	7.3				7.3	7.3				7.3	7.3				7.3	7.3				5.0
6.0	7.3	7.3	7.3			7.3	7.3	7.3			7.3	7.3	7.3			7.3	7.3	7.3			7.3	7.3	7.3			6.0
7.0	7.3	7.3	7.3	6.5	5.0	7.3	7.3	7.3	6.7		7.3	7.3	7.3	6.7		7.3	7.3	7.3	6.7		7.3	7.3	7.3			7.0
8.0	7.3	7.3	7.3	6.3	4.9	7.3	7.3	7.3	6.5	5.0	7.3	7.3	7.3	6.5	5.0	7.3	7.3	7.3	6.5	5.0	7.3	7.3	7.3	6.6	5.0	8.0
9.0	7.3	7.3	7.2	6.0		7.3	7.3	7.3	6.3	4.9	7.3	7.3	7.3	6.3	4.9	7.3	7.3	7.3	6.3	4.9	7.3	7.3	7.3	6.4	4.9	9.0
10.0	7.3	7.3	6.9	5.9		7.3	7.3	7.3	6.1		7.3	7.3	7.3	6.1		7.3	7.3	7.3	6.1		7.3	7.3	7.3	6.3	4.9	10.0
11.0	7.3	7.3	6.6	5.7		7.3	7.3	7.0	5.9		7.3	7.3	7.0	5.9		7.3	7.3	7.0	5.9		7.3	7.3	7.3	6.1		11.0
12.0	7.3	7.0	6.3			7.3	7.3	6.8	5.8		7.3	7.3	6.8	5.8		7.3	7.3	6.8	5.8		7.3	7.3	7.2	6.0		12.0
14.0	6.4	6.2	5.9			7.3	7.1	6.3			7.3	7.1	6.3			7.3	7.1	6.3			7.3	7.3	6.7	5.7		14.0
16.0	5.7	5.7				6.8	6.4	5.9			6.8	6.4	5.9			6.8	6.4	5.9			7.3	7.1	6.3			16.0
18.0						6.0	5.9				6.0	5.9				6.0	5.9				7.0	6.6	6.0			18.0
20.0						5.5					5.5					5.4					6.3	6.1				20.0
22.0																					5.1	5.2				22.0
24.0																					4.2					24.0
26.0																										26.0
28.0																										28.0
30.0																										30.0
32.0																										32.0
34.0																										34.0
36.0																										36.0
38.0																										38.0
40.0																										40.0
42.0																										42.0
44.0																										44.0
46.0																										46.0
48.0																										48.0
50.0																										50.0
52.0																										52.0
54.0																										54.0
56.0																										56.0
58.0																										58.0
60.0																										60.0
64.0																										64.0
1	0	0	0	0	0	0	0	0	0	0	0	0	0	0	0	0	0	0	0	0	0	0	0	0	0	1
2	0	0	0	0	0	0	0	0	0	0	0	0	0	0	0	46	46	46	46	46	0	0	0	0	0	2
3	0	0	0	0	0	0	0	0	0	0	46	46	46	46	46	0	0	0	0	0	0	0	0	0	0	3
4	0	0	0	0	0	46	46	46	46	46	0	0	0	0	0	0	0	0	0	0	0	0	0	0	0	4
5	0	0	0	0	0	0	0	0	0	0	0	0	0	0	0	0	0	0	0	0	46	46	46	46	46	5
6	0	0	0	0	0	0	0	0	0	0	0	0	0	0	0	0	0	0	0	0	46	46	46	46	46	6
ID	1	1	1	1	1	76	76	76	76	76	105	105	105	105	105	131	131	131	131	131	30	30	30	30	30	ID
[DEG]	0~84.7	0~84.7	0~84.7	0~84.7	0~84.7	24~84.7	37~84.7	48~84.7	64~84.7	75~84.7	24~84.7	37~84.7	48~84.7	64~84.7	75~84.7	24~84.7	37~84.7	48~84.7	64~84.7	75~84.7	21~84.7	33~84.7	50~84.7	63~84.7	75~84.7	[DEG]
	1	1	1	1	1	1	1	1	1	1	1	1	1	1	1	1	1	1	1	1	1	1	1	1	1	
	8.7t	8.7t	8.7t	8.7t	8.7t	8.7t	8.7t	8.7t	8.7t	8.7t	8.7t	8.7t	8.7t	8.7t	8.7t	8.7t	8.7t	8.7t	8.7t	8.7t	8.7t	8.7t	8.7t	8.7t	8.7t	

m	18.8	18.8	18.8	18.8	18.8	18.8	18.8	18.8	18.8	18.8	18.8	18.8	18.8	18.8	18.8	22.6	22.6	22.6	22.6	22.6	26.3	26.3	26.3	26.3	26.3	m
°	5	15	30	45	60	5	15	30	45	60	5	15	30	45	60	5	15	30	45	60	5	15	30	45	60	°
3.0	7.3					7.3					7.3															3.0
3.5	7.3					7.3					7.3															3.5
4.0	7.3					7.3	7.3				7.3	7.3				7.3										4.0
4.5	7.3					7.3	7.3				7.3	7.3				7.3										4.5
5.0	7.3	7.3				7.3	7.3				7.3	7.3				7.3	7.3				7.3					5.0
6.0	7.3	7.3	7.3			7.3	7.3	7.3			7.3	7.3	7.3			7.3	7.3				7.3	7.3				6.0
7.0	7.3	7.3	7.3	6.9		7.3	7.3	7.3	6.9		7.3	7.3	7.3	6.9		7.3	7.3	7.3			7.3	7.3				7.0
8.0	7.3	7.3	7.3	6.6	5.0	7.3	7.3	7.3	6.6	5.0	7.3	7.3	7.3	6.6	5.0	7.3	7.3	7.3	6.8		7.3	7.3	7.3			8.0
9.0	7.3	7.3	7.3	6.4	4.9	7.3	7.3	7.3	6.4	4.9	7.3	7.3	7.3	6.4	4.9	7.3	7.3	7.3	6.6	5.0	7.3	7.3	7.3	6.7	5.0	9.0
10.0	7.3	7.3	7.3	6.3	4.9	7.3	7.3	7.3	6.3	4.9	7.3	7.3	7.3	6.3	4.9	7.3	7.3	7.3	6.4	4.9	7.3	7.3	7.3	6.5	4.9	10.0
11.0	7.3	7.3	7.3	6.1		7.3	7.3	7.3	6.1		7.3	7.3	7.3	6.1		7.3	7.3	7.3	6.3	4.8	7.3	7.3	7.3	6.4	4.9	11.0
12.0	7.3	7.3	7.2	6.0		7.3	7.3	7.2	6.0		7.3	7.3	7.2	6.0		7.3	7.3	7.3	6.1		7.3	7.3	7.3	6.3	4.8	12.0
14.0	7.3	7.3	6.7	5.7		7.3	7.3	6.7	5.7		7.3	7.3	6.7	5.7		7.2	6.9	6.5	5.9		7.3	7.3	7.3	6.0		14.0
16.0	7.3	7.1	6.3			7.3	7.1	6.3			7.3	7.1	6.3			6.4	6.1	5.9	5.7		6.9	7.3	7.0	5.8		16.0
18.0	7.0	6.6	6.0			7.0	6.6	6.0			6.6	6.6	6.0			5.7	5.5	5.3			5.1	5.5	5.9	5.7		18.0
20.0	5.9	6.1				5.6	5.7				5.1	5.3				5.1	5.0	4.9			3.7	4.0	4.4			20.0
22.0	4.8	4.9				4.5	4.6				4.0	4.2				4.6	4.5	4.5			2.6	2.9	3.2			22.0
24.0	3.9					3.6					3.2					4.2	4.1				1.8	2.0	2.2			24.0
26.0																3.6	3.7				1.1	1.2				26.0
28.0																										28.0
30.0																										30.0
32.0																										32.0
34.0																										34.0
36.0																										36.0
38.0																										38.0
40.0																										40.0
42.0																										42.0
44.0																										44.0
46.0																										46.0
48.0																										48.0
50.0																										50.0
52.0																										52.0
54.0																										54.0
56.0																										56.0
58.0																										58.0
60.0																										60.0
64.0																										64.0
1	0	0	0	0	0	0	0	0	0	0	0	0	0	0	0	0	0	0	0	0	92	92	92	92	92	1
2	0	0	0	0	0	0	0	0	0	0	46	46	46	46	46	0	0	0	0	0	92	92	92	92	92	2
3	0	0	0	0	0	46	46	46	46	46	46	46	46	46	46	0	0	0	0	0	0	0	0	0	0	3
4	46	46	46	46	46	46	46	46	46	46	0	0	0	0	0	0	0	0	0	0	0	0	0	0	0	4
5	46	46	46	46	46	0	0	0	0	0	0	0	0	0	0	46	46	46	46	46	0	0	0	0	0	5
6	0	0	0	0	0	0	0	0	0	0	0	0	0	0	0	92	92	92	92	92	0	0	0	0	0	6
ID	58	58	58	58	58	88	88	88	88	88	113	113	113	113	113	20	20	20	20	20	134	134	134	134	134	ID
[DEG]	21~84.7	33~84.7	50~84.7	63~84.7	75~84.7	21~84.7	33~84.7	50~84.7	63~84.7	75~84.7	21~84.7	33~84.7	50~84.7	63~84.7	75~84.7	29~84.7	30~84.7	46~84.7	63~84.7	76~84.7	38~84.7	40~84.7	47~84.7	63~84.7	76~84.7	[DEG]
	1	1	1	1	1	1	1	1	1	1	1	1	1	1	1	1	1	1	1	1	1	1	1	1	1	
	8.7t	8.7t	8.7t	8.7t	8.7t	8.7t	8.7t	8.7t	8.7t	8.7t	8.7t	8.7t	8.7t	8.7t	8.7t	8.7t	8.7t	8.7t	8.7t	8.7t	8.7t	8.7t	8.7t	8.7t	8.7t	

FLJ	1.6m + 7.4m	11.9 t	8.0m x 6.2m	360 °	JPN

m	30.0	30.0	30.0	30.0	30.0	30.0	30.0	30.0	30.0	30.0	33.7	33.7	33.7	33.7	33.7	37.4	37.4	37.4	37.4	37.4	37.4	37.4	37.4	37.4	37.4	m
°	5	15	30	45	60	5	15	30	45	60	5	15	30	45	60	5	15	30	45	60	5	15	30	45	60	°
3.0																										3.0
3.5																										3.5
4.0																										4.0
4.5																										4.5
5.0	7.3					7.3																				5.0
6.0	7.3	7.3				7.3	7.3				7.3															6.0
7.0	7.3	7.3				7.3	7.3				7.3	7.3				7.1					7.3					7.0
8.0	7.3	7.3	7.3			7.3	7.3	7.3			7.3	7.3				7.1	7.1				7.3	7.3				8.0
9.0	7.3	7.3	7.3			7.3	7.3	7.3	6.8		7.3	7.3	7.3			7.1	7.1				7.3	7.3				9.0
10.0	7.3	7.3	7.3	6.6	5.0	7.3	7.3	7.3	6.6	5.0	7.3	7.3	7.3	6.7		7.1	7.1	7.1			7.3	7.3	7.3			10.0
11.0	7.3	7.3	7.3	6.5	4.9	7.3	7.3	7.3	6.5	4.9	7.3	7.3	7.3	6.6	4.9	7.1	7.1	7.1	6.7	5.0	7.3	7.3	7.2	6.7		11.0
12.0	7.3	7.3	7.1	6.4	4.9	7.3	7.3	7.3	6.4	4.9	7.3	7.3	7.3	6.5	4.9	7.1	7.1	7.1	6.6	4.9	7.3	7.3	6.9	6.4	4.9	12.0
14.0	6.8	6.6	6.3	6.1		7.3	7.3	7.3	6.1		7.3	7.3	7.3	6.2	4.8	7.1	7.1	7.1	6.3	4.8	6.9	6.6	6.2	5.9	4.8	14.0
16.0	6.0	5.8	5.6	5.5		6.9	7.3	7.2	5.9		6.9	7.3	7.3	6.0		7.0	7.1	7.1	6.1		6.1	5.9	5.7	5.5		16.0
18.0	5.3	5.2	5.1	5.0		5.1	5.5	6.0	5.8		5.1	5.5	6.0	5.9		5.2	5.6	6.1	6.0		5.5	5.4	5.2	5.0		18.0
20.0	4.8	4.7	4.6	4.5		3.7	4.0	4.4	4.7		3.7	4.1	4.5	4.8		3.8	4.2	4.6	4.9		5.0	4.9	4.7	4.6		20.0
22.0	4.3	4.3	4.2			2.6	2.9	3.2			2.6	2.9	3.3	3.5		2.8	3.0	3.4	3.7		4.6	4.5	4.3	4.3		22.0
24.0	3.9	3.9	3.8			1.8	2.0	2.3			1.8	2.0	2.3			1.9	2.1	2.4	2.7		4.0	4.1	4.0	4.0		24.0
26.0	3.5	3.5	3.5			1.1	1.2	1.4				1.3	1.5					1.6			3.2	3.4	3.6			26.0
28.0	2.9	3.0																			2.6	2.7	2.9			28.0
30.0	2.3	2.4																			2.1	2.2	2.3			30.0
32.0	1.9	1.9																			1.6	1.7	1.8			32.0
34.0	1.5																				1.2	1.3				34.0
36.0																						0.9				36.0
38.0																										38.0
40.0																										40.0
42.0																										42.0
44.0																										44.0
46.0																										46.0
48.0																										48.0
50.0																										50.0
52.0																										52.0
54.0																										54.0
56.0																										56.0
58.0																										58.0
60.0																										60.0
64.0																										64.0
1	0	0	0	0	0	92	92	92	92	92	92	92	92	92	92	92	92	92	92	92	0	0	0	0	0	1
2	0	0	0	0	0	92	92	92	92	92	92	92	92	92	92	92	92	92	92	92	0	0	0	0	0	2
3	0	0	0	0	0	46	46	46	46	46	92	92	92	92	92	92	92	92	92	92	46	46	46	46	46	3
4	46	46	46	46	46	0	0	0	0	0	0	0	0	0	0	46	46	46	46	46	92	92	92	92	92	4
5	92	92	92	92	92	0	0	0	0	0	0	0	0	0	0	0	0	0	0	0	92	92	92	92	92	5
6	92	92	92	92	92	0	0	0	0	0	0	0	0	0	0	0	0	0	0	0	92	92	92	92	92	6
ID	22	22	22	22	22	116	116	116	116	116	110	110	110	110	110	93	93	93	93	93	24	24	24	24	24	ID
[DEG]	24~84.7	32~84.7	50~84.7	63~84.7	78~84.7	46~84.7	47~84.7	49~84.7	62~84.7	78~84.7	54~84.7	52~84.7	54~84.7	62~84.7	76~84.7	58~84.7	59~84.7	58~84.7	62~84.7	78~84.7	41~84.7	38~84.7	48~84.7	63~84.7	78~84.7	[DEG]
	1	1	1	1	1	1	1	1	1	1	1	1	1	1	1	1	1	1	1	1	1	1	1	1	1	
	8.7t	8.7t	8.7t	8.7t	8.7t	8.7t	8.7t	8.7t	8.7t	8.7t	8.7t	8.7t	8.7t	8.7t	8.7t	8.7t	8.7t	8.7t	8.7t	8.7t	8.7t	8.7t	8.7t	8.7t	8.7t	

m	41.2	41.2	41.2	41.2	41.2	44.9	44.9	44.9	44.9	44.9	44.9	44.9	44.9	44.9	44.9	48.6	48.6	48.6	48.6	48.6	48.6	48.6	48.6	48.6	48.6	m
°	5	15	30	45	60	5	15	30	45	60	5	15	30	45	60	5	15	30	45	60	5	15	30	45	60	°
3.0																										3.0
3.5																										3.5
4.0																										4.0
4.5																										4.5
5.0																										5.0
6.0																										6.0
7.0	7.3																									7.0
8.0	7.3										6.5															8.0
9.0	7.3	7.3				4.6					6.5					4.8					5.4					9.0
10.0	7.3	7.3	7.3			4.6	4.6				6.5	6.5				4.8					5.4					10.0
11.0	7.3	7.3	7.3			4.6	4.6				6.5	6.5	6.5			4.8	4.8				5.4	5.4				11.0
12.0	7.3	7.3	7.3	6.6	4.9	4.6	4.6	4.6			6.5	6.5	6.5			4.8	4.8	4.8			5.4	5.4	5.4			12.0
14.0	7.3	7.3	7.3	6.4	4.9	4.6	4.6	4.6	4.6	4.6	6.5	6.5	6.5	6.5	4.9	4.8	4.8	4.8	4.8	4.8	5.4	5.4	5.4	5.4	4.9	14.0
16.0	7.1	7.3	7.3	6.2		4.6	4.6	4.6	4.6	4.6	6.5	6.5	6.5	6.3	4.8	4.8	4.8	4.8	4.8	4.8	5.4	5.4	5.4	5.4	4.8	16.0
18.0	5.3	5.7	6.2	6.1		4.6	4.6	4.6	4.6		5.5	5.9	6.4	6.1		4.8	4.8	4.8	4.8		5.4	5.4	5.4	5.4		18.0
20.0	3.9	4.3	4.7	5.1		4.6	4.6	4.6	4.6		4.1	4.5	4.9	5.2		4.8	4.8	4.8	4.8		4.3	4.6	5.1	5.4		20.0
22.0	2.8	3.2	3.5	3.8		4.5	4.5	4.3	4.2		3.0	3.3	3.7	4.0		3.7	4.0	4.4	4.6		3.2	3.5	3.9	4.1		22.0
24.0	2.0	2.2	2.6	2.8		3.6	3.8	4.0	4.0		2.1	2.4	2.7	3.0		2.8	3.1	3.4	3.6		2.3	2.5	2.9	3.1		24.0
26.0			1.8	1.9		2.8	3.0	3.2	3.4				1.9	2.1		2.1	2.3	2.6	2.8				2.1	2.3		26.0
28.0						2.2	2.3	2.5	2.7								1.7	1.9	2.1							28.0
30.0						1.6	1.8	2.0																		30.0
32.0						1.2	1.3	1.5																		32.0
34.0							0.9	1.0																		34.0
36.0																										36.0
38.0																										38.0
40.0																										40.0
42.0																										42.0
44.0																										44.0
46.0																										46.0
48.0																										48.0
50.0																										50.0
52.0																										52.0
54.0																										54.0
56.0																										56.0
58.0																										58.0
60.0																										60.0
64.0																										64.0
1	92	92	92	92	92	0	0	0	0	0	92	92	92	92	92	46	46	46	46	46	92	92	92	92	92	1
2	92	92	92	92	92	46	46	46	46	46	92	92	92	92	92	92	92	92	92	92	92	92	92	92	92	2
3	92	92	92	92	92	92	92	92	92	92	92	92	92	92	92	92	92	92	92	92	92	92	92	92	92	3
4	92	92	92	92	92	92	92	92	92	92	92	92	92	92	92	92	92	92	92	92	92	92	92	92	92	4
5	0	0	0	0	0	92	92	92	92	92	46	46	46	46	46	92	92	92	92	92	92	92	92	92	92	5
6	0	0	0	0	0	92	92	92	92	92	0	0	0	0	0	46	46	46	46	46	0	0	0	0	0	6
ID	83	83	83	83	83	26	26	26	26	26	65	65	65	65	65	38	38	38	38	38	49	49	49	49	49	ID
[DEG]	61~84.7	62~84.7	61~84.7	62~84.7	79~84.7	54~84.7	52~84.7	53~84.7	63~84.7	78~84.7	64~84.7	65~84.7	64~84.7	65~84.7	78~84.7	64~84.7	62~84.7	64~84.7	65~84.7	79~84.7	66~84.7	67~84.7	66~84.7	67~84.7	79~84.7	[DEG]
	1	1	1	1	1	1	1	1	1	1	1	1	1	1	1	1	1	1	1	1	1	1	1	1	1	
	8.7t	8.7t	8.7t	8.7t	8.7t	8.7t	8.7t	8.7t	8.7t	8.7t	8.7t	8.7t	8.7t	8.7t	8.7t	8.7t	8.7t	8.7t	8.7t	8.7t	8.7t	8.7t	8.7t	8.7t	8.7t	

フルオートラフィングジブ

FLJ	1.6m + 7.4m	11.9 t	8.0m x 6.2m	360 °	JPN

m	52.3	52.3	52.3	52.3	52.3	52.3	52.3	52.3	52.3	52.3	56.0	56.0	56.0	56.0	56.0	60.0	60.0	60.0	60.0	60.0						m
°	5	15	30	45	60	5	15	30	45	60	5	15	30	45	60	5	15	30	45	60						°
3.0																										3.0
3.5																										3.5
4.0																										4.0
4.5																										4.5
5.0																										5.0
6.0																										6.0
7.0																										7.0
8.0																										8.0
9.0																										9.0
10.0	3.9					4.4																				10.0
11.0	3.9					4.4					3.7															11.0
12.0	3.9	3.9				4.4	4.4				3.7															12.0
14.0	3.9	3.9	3.9			4.4	4.4	4.4			3.7	3.7	3.7			3.2	3.2									14.0
16.0	3.9	3.9	3.9	3.9	3.9	4.4	4.4	4.4	4.4	4.4	3.7	3.7	3.7	3.7	3.7	3.2	3.2	3.2	3.2							16.0
18.0	3.9	3.9	3.9	3.9	3.9	4.4	4.4	4.4	4.4	4.4	3.7	3.7	3.7	3.7	3.7	3.2	3.2	3.2	3.2	3.2						18.0
20.0	3.9	3.9	3.9	3.9		4.4	4.4	4.4	4.4		3.7	3.7	3.7	3.7		3.2	3.2	3.2	3.2	3.2						20.0
22.0	3.9	3.9	3.9	3.9		3.4	3.7	4.0	4.3		3.5	3.7	3.7	3.7		3.2	3.2	3.2	3.2							22.0
24.0	3.0	3.2	3.5	3.8		2.5	2.7	3.1	3.3		2.6	2.9	3.2	3.5			2.8	3.2	3.2							24.0
26.0	2.3	2.5	2.7	2.9				2.3	2.5				2.4	2.7					2.6							26.0
28.0		1.8	2.1	2.2																						28.0
30.0				1.6																						30.0
32.0																										32.0
34.0																										34.0
36.0																										36.0
38.0																										38.0
40.0																										40.0
42.0																										42.0
44.0																										44.0
46.0																										46.0
48.0																										48.0
50.0																										50.0
52.0																										52.0
54.0																										54.0
56.0																										56.0
58.0																										58.0
60.0																										60.0
64.0																										64.0
% 1	46	46	46	46	46	92	92	92	92	92	92	92	92	92	92	100	100	100	100	100						1
% 2	92	92	92	92	92	92	92	92	92	92	92	92	92	92	92	100	100	100	100	100						2
% 3	92	92	92	92	92	92	92	92	92	92	92	92	92	92	92	100	100	100	100	100						3
% 4	92	92	92	92	92	92	92	92	92	92	92	92	92	92	92	100	100	100	100	100						4
% 5	92	92	92	92	92	92	92	92	92	92	92	92	92	92	92	100	100	100	100	100						5
% 6	92	92	92	92	92	46	46	46	46	46	92	92	92	92	92	100	100	100	100	100						6
ID	28	28	28	28	28	39	39	39	39	39	29	29	29	29	29	19	19	19	19	19						ID
[DEG]	66~84.7	65~84.7	66~84.7	65~84.7	78~84.7	68~84.7	69~84.7	68~84.7	69~84.7	78~84.7	70~84.7	71~84.7	70~84.7	71~84.7	79~84.7	73~84.7	73~84.7	74~84.7	73~84.7	79~84.7						[DEG]
	1	1	1	1	1	1	1	1	1	1	1	1	1	1	1	1	1	1	1	1						
	8.7t	8.7t	8.7t	8.7t	8.7t	8.7t	8.7t	8.7t	8.7t	8.7t	8.7t	8.7t	8.7t	8.7t	8.7t	8.7t	8.7t	8.7t	8.7t	8.7t						

FLJ	1.6m + 12.4m	11.9 t	8.0m x 6.2m	360 °	JPN

m	11.4	11.4	11.4	11.4	11.4	15.1	15.1	15.1	15.1	15.1	15.1	15.1	15.1	15.1	15.1	15.1	15.1	15.1	15.1	15.1	18.8	18.8	18.8	18.8	18.8	m
°	5	15	30	45	60	5	15	30	45	60	5	15	30	45	60	5	15	30	45	60	5	15	30	45	60	°
3.0	4.3																									3.0
3.5	4.3																									3.5
4.0	4.3					4.3					4.3					4.3					4.3					4.0
4.5	4.3					4.3					4.3					4.3					4.3					4.5
5.0	4.3					4.3					4.3					4.3					4.3					5.0
6.0	4.3	4.3				4.3	4.3				4.3	4.3				4.3	4.3				4.3					6.0
7.0	4.3	4.3				4.3	4.3				4.3	4.3				4.3	4.3				4.3	4.3				7.0
8.0	4.3	4.3				4.3	4.3				4.3	4.3				4.3	4.3				4.3	4.3				8.0
9.0	4.3	4.3	4.3			4.3	4.3	4.3			4.3	4.3	4.3			4.3	4.3	4.3			4.3	4.3				9.0
10.0	4.3	4.3	4.1			4.3	4.3	4.3			4.3	4.3	4.3			4.3	4.3	4.3			4.3	4.3	4.3			10.0
11.0	4.3	4.3	3.9	3.2		4.3	4.3	4.1	3.3		4.3	4.3	4.1	3.3		4.3	4.3	4.1	3.3		4.3	4.3	4.1			11.0
12.0	4.3	4.3	3.7	3.1		4.3	4.3	3.9	3.2		4.3	4.3	3.9	3.2		4.3	4.3	3.9	3.2		4.3	4.3	3.9	3.3		12.0
14.0	4.3	4.0	3.3	2.9		4.3	4.3	3.5	3.0		4.3	4.3	3.5	3.0		4.3	4.3	3.5	3.0		4.3	4.3	3.7	3.1		14.0
16.0	3.8	3.5	3.0	2.7		4.3	3.9	3.3	2.8		4.3	3.9	3.3	2.8		4.3	3.9	3.3	2.8		4.3	4.1	3.4	2.9		16.0
18.0	3.4	3.2	2.8			3.9	3.6	3.0	2.7		3.9	3.6	3.0	2.7		3.9	3.6	3.0	2.7		4.3	3.8	3.2	2.8		18.0
20.0	3.0	2.9				3.5	3.3	2.9			3.5	3.3	2.9			3.5	3.3	2.9			4.0	3.5	3.0	2.7		20.0
22.0	2.7					3.2	3.0				3.2	3.0				3.2	3.0				3.6	3.3	2.9			22.0
24.0						2.9	2.8				2.9	2.8				2.9	2.8				3.3	3.1	2.8			24.0
26.0																					3.0	2.9				26.0
28.0																					2.8					28.0
30.0																										30.0
32.0																										32.0
34.0																										34.0
36.0																										36.0
38.0																										38.0
40.0																										40.0
42.0																										42.0
44.0																										44.0
46.0																										46.0
48.0																										48.0
50.0																										50.0
52.0																										52.0
54.0																										54.0
56.0																										56.0
58.0																										58.0
60.0																										60.0
64.0																										64.0
% 1	0	0	0	0		0	0	0	0		0	0	0	0		0	0	0	0		0	0	0	0		1
% 2	0	0	0	0		0	0	0	0		0	0	0	0		46	46	46	46		0	0	0	0		2
% 3	0	0	0	0		0	0	0	0		46	46	46	46		0	0	0	0		0	0	0	0		3
% 4	0	0	0	0		46	46	46	46		0	0	0	0		0	0	0	0		0	0	0	0		4
% 5	0	0	0	0		0	0	0	0		0	0	0	0		0	0	0	0		46	46	46	46		5
% 6	0	0	0	0		0	0	0	0		0	0	0	0		0	0	0	0		46	46	46	46		6
ID	1	1	1	1		76	76	76	76		105	105	105	105		131	131	131	131		30	30	30	30		ID
[DEG]	0~84.7	0~84.7	0~84.7	0~84.7		29~84.7	32~84.7	51~84.7	60~84.7		29~84.7	31~84.7	51~84.7	60~84.7		29~84.7	31~84.7	51~84.7	60~84.7		26~84.7	37~84.7	46~84.7	60~84.7		[DEG]
	1	1	1	1		1	1	1	1		1	1	1	1		1	1	1	1		1	1	1	1		
	8.7t	8.7t	8.7t	8.7t		8.7t	8.7t	8.7t	8.7t		8.7t	8.7t	8.7t	8.7t		8.7t	8.7t	8.7t	8.7t		8.7t	8.7t	8.7t	8.7t		

FLJ	1.6m + 12.4m	11.9 t	8.0m x 6.2m	360 °	JPN

m	18.8	18.8	18.8	18.8	18.8	18.8	18.8	18.8	18.8	18.8	18.8	18.8	18.8	18.8	18.8	22.6	22.6	22.6	22.6	22.6	26.3	26.3	26.3	26.3	26.3	m
°	5	15	30	45	60	5	15	30	45	60	5	15	30	45	60	5	15	30	45	60	5	15	30	45	60	°
m 3.0																										3.0
3.5																										3.5
4.0	4.3					4.3					4.3															4.0
4.5	4.3					4.3					4.3															4.5
5.0	4.3					4.3					4.3					4.3										5.0
6.0	4.3					4.3					4.3					4.3					4.3					6.0
7.0	4.3	4.3				4.3	4.3				4.3	4.3				4.3	4.3				4.3					7.0
8.0	4.3	4.3				4.3	4.3				4.3	4.3				4.3	4.3				4.3	4.3				8.0
9.0	4.3	4.3				4.3	4.3				4.3	4.3				4.3	4.3				4.3	4.3				9.0
10.0	4.3	4.3	4.3			4.3	4.3	4.3			4.3	4.3	4.3			4.3	4.3				4.3	4.3				10.0
11.0	4.3	4.3	4.1			4.3	4.3	4.2			4.3	4.3	4.2			4.3	4.3	4.1			4.3	4.3	4.3			11.0
12.0	4.3	4.3	4.0	3.3		4.3	4.3	4.0	3.3		4.3	4.3	4.0	3.3		4.3	4.3	4.0			4.3	4.3	4.2			12.0
14.0	4.3	4.3	3.7	3.1		4.3	4.3	3.7	3.1		4.3	4.3	3.7	3.1		4.3	4.3	3.7	3.1		4.3	4.3	3.9	3.2	2.7	14.0
16.0	4.3	4.1	3.5	2.9		4.3	4.2	3.5	2.9		4.3	4.2	3.5	2.9		4.3	4.2	3.5	3.0		4.3	4.3	3.7	3.0	2.6	16.0
18.0	4.3	3.8	3.2	2.8		4.3	3.8	3.2	2.8		4.3	3.9	3.2	2.8		4.3	3.9	3.3	2.9		4.3	4.2	3.5	2.9		18.0
20.0	4.0	3.6	3.0	2.7		4.0	3.6	3.0	2.7		4.0	3.6	3.0	2.7		4.2	3.7	3.1	2.8		4.3	4.0	3.3	2.8		20.0
22.0	3.6	3.3	2.9			3.6	3.3	2.9			3.6	3.3	2.9			3.9	3.4	3.0			3.6	3.7	3.2	2.7		22.0
24.0	3.3	3.1	2.8			3.3	3.1	2.8			3.3	3.1	2.8			3.6	3.3	2.9			2.7	3.1	3.0			24.0
26.0	3.0	2.9				3.0	2.9				3.0	2.9				3.4	3.1	2.8			2.0	2.3	2.7			26.0
28.0	2.8					2.8					2.7					3.2	3.0				1.4	1.6	1.9			28.0
30.0																2.9	2.8					1.1				30.0
32.0																2.6										32.0
34.0																										34.0
36.0																										36.0
38.0																										38.0
40.0																										40.0
42.0																										42.0
44.0																										44.0
46.0																										46.0
48.0																										48.0
50.0																										50.0
52.0																										52.0
54.0																										54.0
56.0																										56.0
58.0																										58.0
60.0																										60.0
64.0																										64.0
% 1	0	0	0	0		0	0	0	0		0	0	0	0		0	0	0	0		92	92	92	92	92	1
% 2	0	0	0	0		0	0	0	0		46	46	46	46		0	0	0	0		92	92	92	92	92	2
% 3	0	0	0	0		46	46	46	46		46	46	46	46		0	0	0	0		0	0	0	0	0	3
% 4	46	46	46	46		46	46	46	46		0	0	0	0		0	0	0	0		0	0	0	0	0	4
% 5	46	46	46	46		0	0	0	0		0	0	0	0		46	46	46	46		0	0	0	0	0	5
% 6	0	0	0	0		0	0	0	0		0	0	0	0		92	92	92	92		0	0	0	0	0	6
ID	58	58	58	58		88	88	88	88		113	113	113	113		20	20	20	20		134	134	134	134	134	ID
[DEG]	26~84.7	37~84.7	46~84.7	60~84.7		26~84.7	37~84.7	46~84.7	60~84.7		26~84.7	37~84.7	46~84.7	60~84.7		24~84.7	34~84.7	49~84.7	65~84.7		44~84.7	42~84.7	50~84.7	64~84.7	77~84.7	[DEG]
	1	1	1	1		1	1	1	1		1	1	1	1		1	1	1	1		1	1	1	1	1	
	8.7t	8.7t	8.7t	8.7t		8.7t	8.7t	8.7t	8.7t		8.7t	8.7t	8.7t	8.7t		8.7t	8.7t	8.7t	8.7t		8.7t	8.7t	8.7t	8.7t	8.7t	

m	30.0	30.0	30.0	30.0	30.0	30.0	30.0	30.0	30.0	30.0	33.7	33.7	33.7	33.7	33.7	37.4	37.4	37.4	37.4	37.4	37.4	37.4	37.4	37.4	37.4	m
°	5	15	30	45	60	5	15	30	45	60	5	15	30	45	60	5	15	30	45	60	5	15	30	45	60	°
m 3.0																										3.0
3.5																										3.5
4.0																										4.0
4.5																										4.5
5.0																										5.0
6.0	4.0					4.3																				6.0
7.0	4.0					4.3					4.3					4.1										7.0
8.0	4.0					4.3					4.3					4.1					4.3					8.0
9.0	4.0	4.0				4.3	4.3				4.3	4.3				4.1					4.3					9.0
10.0	4.0	4.0				4.3	4.3				4.3	4.3				4.1	4.1				4.3	4.3				10.0
11.0	4.0	4.0				4.3	4.3	4.3			4.3	4.3				4.1	4.1				4.3	4.3				11.0
12.0	4.0	4.0	4.0			4.3	4.3	4.2			4.3	4.3	4.2			4.1	4.1				4.3	4.3				12.0
14.0	4.0	4.0	3.7	3.2		4.3	4.3	3.9	3.2		4.3	4.3	3.9	3.3		4.1	4.1	3.9			4.3	4.3	3.7			14.0
16.0	4.0	4.0	3.5	3.1		4.3	4.3	3.7	3.1		4.3	4.3	3.7	3.2	2.6	4.1	4.1	3.7	3.2	2.6	4.3	4.3	3.5	3.1		16.0
18.0	4.0	4.0	3.4	3.0		4.3	4.3	3.5	3.0		4.3	4.3	3.6	3.0	2.6	4.1	4.1	3.6	3.1	2.6	4.3	4.1	3.4	3.0		18.0
20.0	4.0	3.8	3.2	2.9		4.3	4.1	3.4	2.9		4.3	4.1	3.4	2.9		4.1	4.1	3.4	3.0		4.3	3.9	3.2	2.9		20.0
22.0	4.0	3.6	3.1	2.8		3.6	3.8	3.2	2.8		3.5	3.9	3.3	2.8		3.6	3.9	3.3	2.9		4.2	3.7	3.1	2.8		22.0
24.0	3.7	3.4	3.0	2.7		2.7	3.1	3.1	2.7		2.6	3.0	3.1	2.8		2.7	3.1	3.2	2.8		3.9	3.5	3.0	2.7		24.0
26.0	3.4	3.3	2.9			1.9	2.3	2.7			1.9	2.2	2.7	2.7		1.9	2.3	2.8	2.7		3.6	3.4	2.9	2.7		26.0
28.0	3.1	3.1	2.8			1.3	1.6	2.0			1.2	1.6	2.0				1.6	2.0	2.3		3.1	3.2	2.8	2.6		28.0
30.0	2.8	2.8	2.7				1.0	1.3					1.3					1.4			2.6	2.8	2.7			30.0
32.0	2.4	2.5	2.5																		2.1	2.3	2.5			32.0
34.0	2.0	2.1																			1.7	1.8	2.0			34.0
36.0		1.7																			1.3	1.5	1.6			36.0
38.0																					1.0	1.1				38.0
40.0																										40.0
42.0																										42.0
44.0																										44.0
46.0																										46.0
48.0																										48.0
50.0																										50.0
52.0																										52.0
54.0																										54.0
56.0																										56.0
58.0																										58.0
60.0																										60.0
64.0																										64.0
% 1	0	0	0	0		92	92	92	92		92	92	92	92	92	92	92	92	92	92	0	0	0	0		1
% 2	0	0	0	0		92	92	92	92		92	92	92	92	92	92	92	92	92	92	0	0	0	0		2
% 3	0	0	0	0		46	46	46	46		92	92	92	92	92	92	92	92	92	92	46	46	46	46		3
% 4	46	46	46	46		0	0	0	0		0	0	0	0	0	46	46	46	46	46	92	92	92	92		4
% 5	92	92	92	92		0	0	0	0		0	0	0	0	0	0	0	0	0	0	92	92	92	92		5
% 6	92	92	92	92		0	0	0	0		0	0	0	0	0	0	0	0	0	0	92	92	92	92		6
ID	22	22	22	22		116	116	116	116		110	110	110	110	110	93	93	93	93	93	24	24	24	24		ID
[DEG]	38~84.7	35~84.7	47~84.7	64~84.7		49~84.7	48~84.7	51~84.7	64~84.7		54~84.7	56~84.7	55~84.7	64~84.7	77~84.7	60~84.7	59~84.7	59~84.7	64~84.7	79~84.7	42~84.7	44~84.7	50~84.7	64~84.7		[DEG]
	1	1	1	1		1	1	1	1		1	1	1	1	1	1	1	1	1	1	1	1	1	1		
	8.7t	8.7t	8.7t	8.7t		8.7t	8.7t	8.7t	8.7t		8.7t	8.7t	8.7t	8.7t	8.7t	8.7t	8.7t	8.7t	8.7t	8.7t	8.7t	8.7t	8.7t	8.7t		

フルオートラフィングジブ

FLJ	1.6m + 12.4m	11.9 t	8.0m x 6.2m	360 °	JPN

m	41.2	41.2	41.2	41.2	41.2	44.9	44.9	44.9	44.9	44.9	44.9	44.9	44.9	44.9	44.9	48.6	48.6	48.6	48.6	48.6	48.6	48.6	48.6	48.6	48.6	m
°	5	15	30	45	60	5	15	30	45	60	5	15	30	45	60	5	15	30	45	60	5	15	30	45	60	°
3.0																										3.0
3.5																										3.5
4.0																										4.0
4.5																										4.5
5.0																										5.0
6.0																										6.0
7.0																										7.0
8.0	4.3																									8.0
9.0	4.3										4.0															9.0
10.0	4.3					3.0					4.0					3.2					3.6					10.0
11.0	4.3	4.3				3.0					4.0	4.0				3.2					3.6					11.0
12.0	4.3	4.3				3.0	3.0				4.0	4.0				3.2	3.2				3.6	3.6				12.0
14.0	4.3	4.3	3.9			3.0	3.0				4.0	4.0				3.2	3.2				3.6	3.6				14.0
16.0	4.3	4.3	3.7	3.2		3.0	3.0	3.0			4.0	4.0	3.7			3.2	3.2	3.2			3.6	3.6	3.6			16.0
18.0	4.3	4.3	3.5	3.1	2.6	3.0	3.0	3.0	2.9		4.0	4.0	3.5	3.0	2.6	3.2	3.2	3.2	3.0		3.6	3.6	3.5	3.0		18.0
20.0	4.3	4.1	3.4	3.0	2.6	3.0	3.0	3.0	2.9		4.0	4.0	3.4	2.9	2.6	3.2	3.2	3.2	2.9	2.6	3.6	3.6	3.3	2.9	2.6	20.0
22.0	3.6	4.0	3.3	2.9		3.0	3.0	3.0	2.8		3.7	3.9	3.2	2.9		3.2	3.2	3.2	2.8	2.5	3.6	3.6	3.2	2.8	2.5	22.0
24.0	2.7	3.1	3.2	2.8		3.0	3.0	3.0	2.7		2.8	3.2	3.1	2.8		3.2	3.2	3.1	2.7		2.9	3.3	3.1	2.8		24.0
26.0	2.0	2.3	2.8	2.7		3.0	3.0	2.9	2.6		2.1	2.4	3.0	2.7		2.7	3.0	3.0	2.7		2.2	2.5	3.0	2.7		26.0
28.0		1.7	2.1	2.4		2.7	2.9	2.8	2.6			1.8	2.2	2.6		2.0	2.3	2.8	2.6				2.3	2.6		28.0
30.0			1.5	1.8		2.1	2.4	2.7	2.5					1.9			1.8	2.1	2.4					2.0		30.0
32.0						1.7	1.9	2.2	2.4									1.6	1.8							32.0
34.0						1.3	1.5	1.7																		34.0
36.0						0.9	1.1	1.3																		36.0
38.0								0.9																		38.0
40.0																										40.0
42.0																										42.0
44.0																										44.0
46.0																										46.0
48.0																										48.0
50.0																										50.0
52.0																										52.0
54.0																										54.0
56.0																										56.0
58.0																										58.0
60.0																										60.0
64.0																										64.0
% 1	92	92	92	92	92	0	0	0	0		92	92	92	92	92	46	46	46	46	46	92	92	92	92	92	1
% 2	92	92	92	92	92	46	46	46	46		92	92	92	92	92	92	92	92	92	92	92	92	92	92	92	2
% 3	92	92	92	92	92	92	92	92	92		92	92	92	92	92	92	92	92	92	92	92	92	92	92	92	3
% 4	92	92	92	92	92	92	92	92	92		92	92	92	92	92	92	92	92	92	92	92	92	92	92	92	4
% 5	0	0	0	0	0	92	92	92	92		46	46	46	46	46	92	92	92	92	92	92	92	92	92	92	5
% 6	0	0	0	0	0	92	92	92	92		0	0	0	0	0	46	46	46	46	46	0	0	0	0	0	6
ID	83	83	83	83	83	26	26	26	26		65	65	65	65	65	38	38	38	38	38	49	49	49	49	49	ID
[DEG]	63~84.7	62~84.7	62~84.7	64~84.7	78~84.7	53~84.7	55~84.7	54~84.7	64~84.7		65~84.7	65~84.7	67~84.7	66~84.7	79~84.7	65~84.7	65~84.7	65~84.7	66~84.7	78~84.7	67~84.7	69~84.7	69~84.7	68~84.7	78~84.7	[DEG]
	1	1	1	1	1	1	1	1	1		1	1	1	1	1	1	1	1	1	1	1	1	1	1	1	
	8.7t	8.7t	8.7t	8.7t	8.7t	8.7t	8.7t	8.7t	8.7t		8.7t	8.7t	8.7t	8.7t	8.7t	8.7t	8.7t	8.7t	8.7t	8.7t	8.7t	8.7t	8.7t	8.7t	8.7t	

m	52.3	52.3	52.3	52.3	52.3	52.3	52.3	52.3	52.3	52.3	56.0	56.0	56.0	56.0	56.0	60.0	60.0	60.0	60.0	60.0						m
°	5	15	30	45	60	5	15	30	45	60	5	15	30	45	60	5	15	30	45	60						°
3.0																										3.0
3.5																										3.5
4.0																										4.0
4.5																										4.5
5.0																										5.0
6.0																										6.0
7.0																										7.0
8.0																										8.0
9.0																										9.0
10.0																										10.0
11.0	2.7					3.0																				11.0
12.0	2.7					3.0					2.6															12.0
14.0	2.7	2.7				3.0	3.0				2.6	2.6				1.9										14.0
16.0	2.7	2.7	2.7			3.0	3.0	3.0			2.6	2.6				1.9	1.9									16.0
18.0	2.7	2.7	2.7			3.0	3.0	3.0			2.6	2.6	2.6			1.9	1.9	1.9								18.0
20.0	2.7	2.7	2.7	2.7	2.6	3.0	3.0	3.0	2.9	2.6	2.6	2.6	2.6	2.6		1.9	1.9	1.9	1.9							20.0
22.0	2.7	2.7	2.7	2.7	2.5	3.0	3.0	3.0	2.8	2.5	2.6	2.6	2.6	2.6	2.5	1.9	1.9	1.9	1.9	1.9						22.0
24.0	2.7	2.7	2.7	2.7		3.0	3.0	3.0	2.7		2.6	2.6	2.6	2.6	2.5	1.9	1.9	1.9	1.9	1.9						24.0
26.0	2.7	2.7	2.7	2.6		2.3	2.7	3.0	2.7		2.4	2.6	2.6	2.6			1.9	1.9	1.9							26.0
28.0	2.1	2.5	2.7	2.6			2.0	2.5	2.6			2.1	2.6	2.6				1.9	1.9							28.0
30.0		1.9	2.3	2.5					2.2					2.3					1.9							30.0
32.0			1.7	2.0																						32.0
34.0				1.5																						34.0
36.0																										36.0
38.0																										38.0
40.0																										40.0
42.0																										42.0
44.0																										44.0
46.0																										46.0
48.0																										48.0
50.0																										50.0
52.0																										52.0
54.0																										54.0
56.0																										56.0
58.0																										58.0
60.0																										60.0
64.0																										64.0
% 1	46	46	46	46	46	92	92	92	92	92	92	92	92	92	92	100	100	100	100	100						1
% 2	92	92	92	92	92	92	92	92	92	92	92	92	92	92	92	100	100	100	100	100						2
% 3	92	92	92	92	92	92	92	92	92	92	92	92	92	92	92	100	100	100	100	100						3
% 4	92	92	92	92	92	92	92	92	92	92	92	92	92	92	92	100	100	100	100	100						4
% 5	92	92	92	92	92	92	92	92	92	92	92	92	92	92	92	100	100	100	100	100						5
% 6	92	92	92	92	92	46	46	46	46	46	92	92	92	92	92	100	100	100	100	100						6
ID	28	28	28	28	28	39	39	39	39	39	29	29	29	29	29	19	19	19	19	19						ID
[DEG]	67~84.7	67~84.7	67~84.7	66~84.7	79~84.7	69~84.7	69~84.7	71~84.7	70~84.7	79~84.7	71~84.7	70~84.7	73~84.7	72~84.7	79~84.7	73~84.7	73~84.7	74~84.7	74~84.7	79~84.7						[DEG]
	1	1	1	1	1	1	1	1	1	1	1	1	1	1	1	1	1	1	1	1						
	8.7t	8.7t	8.7t	8.7t	8.7t	8.7t	8.7t	8.7t	8.7t	8.7t	8.7t	8.7t	8.7t	8.7t	8.7t	8.7t	8.7t	8.7t	8.7t	8.7t						

FLJ	1.6m + 17.4m	11.9 t	8.0m x 6.2m	360 °	JPN

m	11.4	11.4	11.4	11.4	11.4	15.1	15.1	15.1	15.1	15.1	15.1	15.1	15.1	15.1	15.1	15.1	15.1	15.1	15.1	15.1	18.8	18.8	18.8	18.8	18.8	m
°	5	15	30	45	60	5	15	30	45	60	5	15	30	45	60	5	15	30	45	60	5	15	30	45	60	°
3.0																										3.0
3.5																										3.5
4.0																										4.0
4.5	3.3																									4.5
5.0	3.3					3.1					3.3					3.3										5.0
6.0	3.3					3.1					3.3					3.3					2.7					6.0
7.0	3.3					3.1					3.3					3.3					2.7					7.0
8.0	3.3	3.3				3.1					3.3					3.3					2.7					8.0
9.0	3.3	3.3				3.1	3.1				3.3	3.3				3.3	3.3				2.7	2.7				9.0
10.0	3.3	3.2				3.1	3.1				3.3	3.3				3.3	3.3				2.7	2.7				10.0
11.0	3.3	3.0				3.1	3.1				3.3	3.1				3.3	3.1				2.7	2.7				11.0
12.0	3.2	2.9	2.5			3.1	2.9				3.3	2.9				3.3	3.0				2.7	2.7				12.0
14.0	2.9	2.6	2.3			3.1	2.7	2.3			3.1	2.7	2.3			3.1	2.7	2.3			2.7	2.7	2.3			14.0
16.0	2.6	2.4	2.1	1.8		2.8	2.5	2.2	1.9		2.8	2.5	2.2	1.9		2.8	2.5	2.2	1.9		2.7	2.5	2.2			16.0
18.0	2.4	2.2	1.9	1.7		2.6	2.3	2.0	1.8		2.6	2.3	2.0	1.8		2.6	2.3	2.0	1.8		2.7	2.4	2.0	1.8		18.0
20.0	2.2	2.0	1.8	1.6		2.4	2.1	1.9	1.7		2.4	2.1	1.9	1.7		2.4	2.1	1.9	1.7		2.5	2.2	1.9	1.7		20.0
22.0	2.0	1.9	1.7			2.2	2.0	1.8	1.6		2.2	2.0	1.8	1.6		2.2	2.0	1.8	1.6		2.3	2.1	1.8	1.6		22.0
24.0	1.8	1.7				2.1	1.9	1.7			2.1	1.9	1.7			2.1	1.9	1.7			2.2	2.0	1.8	1.6		24.0
26.0	1.7	1.6				1.9	1.8	1.6			1.9	1.8	1.6			1.9	1.8	1.6			2.0	1.9	1.7			26.0
28.0						1.8	1.6				1.8	1.6				1.8	1.6				1.9	1.8	1.6			28.0
30.0						1.6					1.6					1.6					1.9	1.7				30.0
32.0																					1.7	1.6				32.0
34.0																					1.6					34.0
36.0																										36.0
38.0																										38.0
40.0																										40.0
42.0																										42.0
44.0																										44.0
46.0																										46.0
48.0																										48.0
50.0																										50.0
52.0																										52.0
54.0																										54.0
56.0																										56.0
58.0																										58.0
60.0																										60.0
64.0																										64.0
1	0	0	0	0		0	0	0	0		0	0	0	0		0	0	0	0		0	0	0	0		1
2	0	0	0	0		0	0	0	0		0	0	0	0		46	46	46	46		0	0	0	0		2
3	0	0	0	0		0	0	0	0		46	46	46	46		0	0	0	0		0	0	0	0		3
4	0	0	0	0		46	46	46	46		0	0	0	0		0	0	0	0		0	0	0	0		4
5	0	0	0	0		0	0	0	0		0	0	0	0		0	0	0	0		46	46	46	46		5
6	0	0	0	0		0	0	0	0		0	0	0	0		0	0	0	0		46	46	46	46		6
ID	1	1	1	1		76	76	76	76		105	105	105	105		131	131	131	131		30	30	30	30		ID
[DEG]	0~84.7	0~84.7	0~84.7	0~84.7		23~84.7	36~84.7	47~84.7	63~84.7		23~84.7	36~84.7	47~84.7	63~84.7		23~84.7	36~84.7	47~84.7	63~84.7		21~84.7	33~84.7	49~84.7	63~84.7		[DEG]
	1	1	1	1		1	1	1	1		1	1	1	1		1	1	1	1		1	1	1	1		
	8.7t	8.7t	8.7t	8.7t		8.7t	8.7t	8.7t	8.7t		8.7t	8.7t	8.7t	8.7t		8.7t	8.7t	8.7t	8.7t		8.7t	8.7t	8.7t	8.7t		

m	18.8	18.8	18.8	18.8	18.8	18.8	18.8	18.8	18.8	18.8	18.8	18.8	18.8	18.8	18.8	22.6	22.6	22.6	22.6	22.6	26.3	26.3	26.3	26.3	26.3	m
°	5	15	30	45	60	5	15	30	45	60	5	15	30	45	60	5	15	30	45	60	5	15	30	45	60	°
3.0																										3.0
3.5																										3.5
4.0																										4.0
4.5																										4.5
5.0																										5.0
6.0	2.9					3.2					3.3					2.5										6.0
7.0	2.9					3.2					3.3					2.5					3.3					7.0
8.0	2.9					3.2					3.3					2.5					3.3					8.0
9.0	2.9	2.9				3.2	3.2				3.3	3.3				2.5					3.3					9.0
10.0	2.9	2.9				3.2	3.2				3.3	3.3				2.5	2.5				3.3	3.3				10.0
11.0	2.9	2.9				3.2	3.2				3.3	3.2				2.5	2.5				3.3	3.3				11.0
12.0	2.9	2.9				3.2	3.0				3.3	3.0				2.5	2.5				3.3	3.2				12.0
14.0	2.9	2.8	2.3			3.2	2.8	2.3			3.2	2.8	2.3			2.5	2.5	2.3			3.3	2.9	2.4			14.0
16.0	2.9	2.5	2.2	1.9		2.9	2.6	2.2	1.9		3.0	2.6	2.2	1.9		2.5	2.5	2.2			3.2	2.7	2.2			16.0
18.0	2.7	2.4	2.1	1.8		2.7	2.4	2.1	1.8		2.7	2.4	2.1	1.8		2.5	2.4	2.1	1.8		3.0	2.5	2.1	1.9		18.0
20.0	2.5	2.2	1.9	1.7		2.5	2.2	1.9	1.7		2.5	2.2	2.0	1.7		2.5	2.3	1.9	1.7		2.8	2.4	2.0	1.8		20.0
22.0	2.3	2.1	1.9	1.6		2.3	2.1	1.9	1.6		2.4	2.1	1.9	1.6		2.4	2.1	1.9	1.7		2.6	2.3	1.9	1.7		22.0
24.0	2.2	2.0	1.8	1.6		2.2	2.0	1.8	1.6		2.2	2.0	1.8	1.6		2.3	2.0	1.8	1.6		2.4	2.1	1.9	1.6		24.0
26.0	2.1	1.9	1.7			2.1	1.9	1.7			2.1	1.9	1.7			2.1	1.9	1.7	1.5		2.3	2.0	1.8	1.6		26.0
28.0	1.9	1.8	1.6			2.0	1.8	1.6			2.0	1.8	1.6			2.0	1.8	1.7			2.1	1.9	1.7	1.5		28.0
30.0	1.9	1.7				1.9	1.7				1.9	1.7				1.9	1.8	1.6			1.6	1.9	1.7			30.0
32.0	1.7	1.6				1.7	1.6				1.7	1.6				1.8	1.7				1.1	1.4	1.6			32.0
34.0	1.6					1.6					1.6					1.8	1.6					0.9	1.2			34.0
36.0																1.7										36.0
38.0																										38.0
40.0																										40.0
42.0																										42.0
44.0																										44.0
46.0																										46.0
48.0																										48.0
50.0																										50.0
52.0																										52.0
54.0																										54.0
56.0																										56.0
58.0																										58.0
60.0																										60.0
64.0																										64.0
1	0	0	0	0		0	0	0	0		0	0	0	0		0	0	0	0		92	92	92	92		1
2	0	0	0	0		0	0	0	0		46	46	46	46		0	0	0	0		92	92	92	92		2
3	0	0	0	0		46	46	46	46		46	46	46	46		0	0	0	0		0	0	0	0		3
4	46	46	46	46		46	46	46	46		0	0	0	0		0	0	0	0		0	0	0	0		4
5	46	46	46	46		0	0	0	0		0	0	0	0		46	46	46	46		0	0	0	0		5
6	0	0	0	0		0	0	0	0		0	0	0	0		92	92	92	92		0	0	0	0		6
ID	58	58	58	58		88	88	88	88		113	113	113	113		20	20	20	20		134	134	134	134		ID
[DEG]	21~84.7	32~84.7	49~84.7	63~84.7		21~84.7	32~84.7	49~84.7	63~84.7		20~84.7	32~84.7	49~84.7	63~84.7		28~84.7	37~84.7	51~84.7	63~84.7		45~84.7	44~84.7	47~84.7	62~84.7		[DEG]
	1	1	1	1		1	1	1	1		1	1	1	1		1	1	1	1		1	1	1	1		
	8.7t	8.7t	8.7t	8.7t		8.7t	8.7t	8.7t	8.7t		8.7t	8.7t	8.7t	8.7t		8.7t	8.7t	8.7t	8.7t		8.7t	8.7t	8.7t	8.7t		

フルオートラフィングジブ

FLJ	1.6m + 17.4m	11.9 t	8.0m x 6.2m	360 °	JPN

m	30.0	30.0	30.0	30.0	30.0	30.0	30.0	30.0	30.0	30.0	33.7	33.7	33.7	33.7	33.7	37.4	37.4	37.4	37.4	37.4	37.4	37.4	37.4	37.4	37.4	m
°	5	15	30	45	60	5	15	30	45	60	5	15	30	45	60	5	15	30	45	60	5	15	30	45	60	°
3.0																										3.0
3.5																										3.5
4.0																										4.0
4.5																										4.5
5.0																										5.0
6.0																										6.0
7.0																										7.0
8.0	2.3					3.2					3.1															8.0
9.0	2.3					3.2					3.1					2.4					2.5					9.0
10.0	2.3					3.2					3.1					2.4					2.5					10.0
11.0	2.3	2.3				3.2	3.2				3.1					2.4					2.5					11.0
12.0	2.3	2.3				3.2	3.2				3.1	3.1				2.4	2.4				2.5					12.0
14.0	2.3	2.3				3.2	2.9				3.1	3.0				2.4	2.4				2.5	2.5				14.0
16.0	2.3	2.3	2.2			3.2	2.8	2.3			3.1	2.8	2.3			2.4	2.4	2.2			2.5	2.5				16.0
18.0	2.3	2.3	2.1			3.1	2.6	2.2	1.9		3.1	2.6	2.2			2.4	2.4	2.2			2.5	2.5	2.1			18.0
20.0	2.3	2.3	2.0	1.8		2.9	2.4	2.1	1.8	1.5	2.9	2.5	2.1	1.8		2.4	2.4	2.1	1.8		2.5	2.4	2.0	1.8		20.0
22.0	2.3	2.2	1.9	1.7		2.7	2.3	2.0	1.7	1.5	2.7	2.3	2.0	1.8		2.4	2.4	2.0	1.8	1.5	2.5	2.2	1.9	1.7	1.5	22.0
24.0	2.3	2.1	1.8	1.7		2.5	2.2	1.9	1.7		2.6	2.2	1.9	1.7		2.4	2.2	1.9	1.7	1.5	2.5	2.1	1.8	1.7	1.5	24.0
26.0	2.3	2.0	1.8	1.6		2.4	2.1	1.8	1.6		2.4	2.1	1.8	1.6		2.4	2.2	1.8	1.7		2.4	2.1	1.8	1.6		26.0
28.0	2.2	1.9	1.7	1.6		2.0	2.0	1.8	1.6		1.9	2.0	1.8	1.6		1.9	2.1	1.8	1.6		2.2	2.0	1.7	1.6		28.0
30.0	2.1	1.8	1.6	1.5		1.5	1.8	1.7	1.5		1.4	1.8	1.7	1.5		1.4	1.8	1.7	1.6		2.1	1.9	1.7	1.5		30.0
32.0	2.0	1.8	1.6			1.0	1.3	1.6				1.2	1.7	1.5			1.3	1.7	1.5		2.1	1.8	1.6	1.5		32.0
34.0	1.9	1.7	1.6				0.9	1.2					1.2					1.3	1.5		2.0	1.8	1.6	1.5		34.0
36.0		1.7	1.5																		1.7	1.7	1.5			36.0
38.0		1.6																			1.4	1.6	1.5			38.0
40.0		1.6																			1.1	1.3	1.5			40.0
42.0		1.3																			0.9	1.0	1.2			42.0
44.0																										44.0
46.0																										46.0
48.0																										48.0
50.0																										50.0
52.0																										52.0
54.0																										54.0
56.0																										56.0
58.0																										58.0
60.0																										60.0
64.0																										64.0
1	0	0	0	0		92	92	92	92	92	92	92	92	92		92	92	92	92	92	0	0	0	0	0	1
2	0	0	0	0		92	92	92	92	92	92	92	92	92		92	92	92	92	92	0	0	0	0	0	2
3	0	0	0	0		46	46	46	46	46	92	92	92	92		92	92	92	92	92	46	46	46	46	46	3
4	46	46	46	46		0	0	0	0	0	0	0	0	0		46	46	46	46	46	92	92	92	92	92	4
5	92	92	92	92		0	0	0	0	0	0	0	0	0		0	0	0	0	0	92	92	92	92	92	5
6	92	92	92	92		0	0	0	0	0	0	0	0	0		0	0	0	0	0	92	92	92	92	92	6
ID	22	22	22	22		116	116	116	116	116	110	110	110	110		93	93	93	93	93	24	24	24	24	24	ID
[DEG]	48~84.7	33~84.7	49~84.7	63~84.7		49~84.7	49~84.7	53~84.7	62~84.7	77~84.7	56~84.7	56~84.7	57~84.7	62~84.7		59~84.7	60~84.7	60~84.7	62~84.7	77~84.7	43~84.7	46~84.7	48~84.7	63~84.7	78~84.7	[DEG]
	1	1	1	1		1	1	1	1	1	1	1	1	1		1	1	1	1	1	1	1	1	1	1	
	8.7t	8.7t	8.7t	8.7t		8.7t	8.7t	8.7t	8.7t	8.7t	8.7t	8.7t	8.7t	8.7t		8.7t	8.7t	8.7t	8.7t	8.7t	8.7t	8.7t	8.7t	8.7t	8.7t	

m	41.2	41.2	41.2	41.2	41.2	44.9	44.9	44.9	44.9	44.9	44.9	44.9	44.9	44.9	44.9	48.6	48.6	48.6	48.6	48.6	48.6	48.6	48.6	48.6	48.6	m
°	5	15	30	45	60	5	15	30	45	60	5	15	30	45	60	5	15	30	45	60	5	15	30	45	60	°
3.0																										3.0
3.5																										3.5
4.0																										4.0
4.5																										4.5
5.0																										5.0
6.0																										6.0
7.0																										7.0
8.0																										8.0
9.0																										9.0
10.0	2.7										2.4															10.0
11.0	2.7					1.9					2.4					2.0					2.2					11.0
12.0	2.7					1.9					2.4					2.0					2.2					12.0
14.0	2.7	2.7				1.9	1.9				2.4	2.4				2.0	2.0				2.2	2.2				14.0
16.0	2.7	2.7				1.9	1.9				2.4	2.4				2.0	2.0				2.2	2.2				16.0
18.0	2.7	2.6	2.1			1.9	1.9	1.9			2.4	2.4	2.1			2.0	2.0				2.2	2.2				18.0
20.0	2.7	2.5	2.1	1.8		1.9	1.9	1.9			2.4	2.4	2.0			2.0	2.0	2.0			2.2	2.2	2.0			20.0
22.0	2.7	2.4	2.0	1.8	1.5	1.9	1.9	1.9	1.7		2.4	2.4	2.0	1.7		2.0	2.0	1.9	1.7		2.2	2.2	1.9	1.7		22.0
24.0	2.6	2.3	1.9	1.7	1.5	1.9	1.9	1.8	1.7	1.5	2.4	2.2	1.9	1.7	1.5	2.0	2.0	1.9	1.7	1.5	2.2	2.2	1.9	1.7	1.5	24.0
26.0	2.5	2.2	1.8	1.7		1.9	1.9	1.8	1.6	1.5	2.4	2.2	1.8	1.7	1.5	2.0	2.0	1.8	1.6	1.5	2.2	2.1	1.8	1.6	1.5	26.0
28.0	1.9	2.1	1.8	1.6		1.9	1.9	1.7	1.6		2.0	2.1	1.8	1.6		2.0	2.0	1.7	1.6		2.0	2.1	1.8	1.6		28.0
30.0		1.8	1.7	1.6		1.9	1.9	1.7	1.5			1.9	1.7	1.6		1.9	2.0	1.7	1.6			1.9	1.7	1.6		30.0
32.0			1.7	1.6		1.9	1.9	1.6	1.5				1.7	1.5		1.5	1.8	1.6	1.5				1.7	1.5		32.0
34.0				1.5		1.7	1.8	1.6	1.5					1.5			1.4	1.6	1.5					1.5		34.0
36.0						1.3	1.6	1.5	1.5									1.4	1.5							36.0
38.0						1.0	1.2	1.5											1.3							38.0
40.0							0.9	1.2																		40.0
42.0								0.9																		42.0
44.0																										44.0
46.0																										46.0
48.0																										48.0
50.0																										50.0
52.0																										52.0
54.0																										54.0
56.0																										56.0
58.0																										58.0
60.0																										60.0
64.0																										64.0
1	92	92	92	92	92	0	0	0	0	0	92	92	92	92	92	46	46	46	46	46	92	92	92	92	92	1
2	92	92	92	92	92	46	46	46	46	46	92	92	92	92	92	92	92	92	92	92	92	92	92	92	92	2
3	92	92	92	92	92	92	92	92	92	92	92	92	92	92	92	92	92	92	92	92	92	92	92	92	92	3
4	92	92	92	92	92	92	92	92	92	92	92	92	92	92	92	92	92	92	92	92	92	92	92	92	92	4
5	0	0	0	0	0	92	92	92	92	92	46	46	46	46	46	92	92	92	92	92	92	92	92	92	92	5
6	0	0	0	0	0	92	92	92	92	92	0	0	0	0	0	46	46	46	46	46	0	0	0	0	0	6
ID	83	83	83	83	83	26	26	26	26	26	65	65	65	65	65	38	38	38	38	38	49	49	49	49	49	ID
[DEG]	64~84.7	65~84.7	66~84.7	65~84.7	79~84.7	56~84.7	56~84.7	56~84.7	65~84.7	78~84.7	66~84.7	67~84.7	68~84.7	67~84.7	78~84.7	64~84.7	65~84.7	65~84.7	65~84.7	79~84.7	68~84.7	69~84.7	70~84.7	70~84.7	79~84.7	[DEG]
	1	1	1	1	1	1	1	1	1	1	1	1	1	1	1	1	1	1	1	1	1	1	1	1	1	
	8.7t	8.7t	8.7t	8.7t	8.7t	8.7t	8.7t	8.7t	8.7t	8.7t	8.7t	8.7t	8.7t	8.7t	8.7t	8.7t	8.7t	8.7t	8.7t	8.7t	8.7t	8.7t	8.7t	8.7t	8.7t	

FLJ	1.6m + 17.4m	11.9 t	8.0m x 6.2m	360 °	JPN

m	52.3	52.3	52.3	52.3	52.3	52.3	52.3	52.3	52.3	52.3	56.0	56.0	56.0	56.0	56.0	60.0	60.0	60.0	60.0	60.0						m
°	5	15	30	45	60	5	15	30	45	60	5	15	30	45	60	5	15	30	45	60						°
3.0																										3.0
3.5																										3.5
4.0																										4.0
4.5																										4.5
5.0																										5.0
6.0																										6.0
7.0																										7.0
8.0																										8.0
9.0																										9.0
10.0																										10.0
11.0																										11.0
12.0						2.0																				12.0
14.0	1.8					2.0					1.8															14.0
16.0	1.8	1.8				2.0	2.0				1.8	1.8				1.0										16.0
18.0	1.8	1.8				2.0	2.0				1.8	1.8				1.0	1.0									18.0
20.0	1.8	1.8	1.8			2.0	2.0	2.0			1.8	1.8				1.0	1.0									20.0
22.0	1.8	1.8	1.8			2.0	2.0	1.9			1.8	1.8	1.8			1.0	1.0	1.0								22.0
24.0	1.8	1.8	1.8	1.6		2.0	2.0	1.9	1.7		1.8	1.8	1.8	1.6		1.0	1.0	1.0								24.0
26.0	1.8	1.8	1.8	1.6	1.5	2.0	2.0	1.8	1.6	1.5	1.8	1.8	1.8	1.6	1.5	1.0	1.0	1.0	1.0							26.0
28.0	1.8	1.8	1.7	1.6	1.4	2.0	2.0	1.7	1.6	1.4	1.8	1.8	1.7	1.6	1.4		1.0	1.0	1.0	1.0						28.0
30.0	1.8	1.8	1.7	1.5			2.0	1.7	1.5			1.8	1.7	1.5				1.0	1.0	1.0						30.0
32.0		1.8	1.6	1.5				1.6	1.5				1.6	1.5					1.0							32.0
34.0			1.6	1.5					1.5					1.5												34.0
36.0			1.5	1.4																						36.0
38.0				1.4																						38.0
40.0																										40.0
42.0																										42.0
44.0																										44.0
46.0																										46.0
48.0																										48.0
50.0																										50.0
52.0																										52.0
54.0																										54.0
56.0																										56.0
58.0																										58.0
60.0																										60.0
64.0																										64.0
1	46	46	46	46	46	92	92	92	92	92	92	92	92	92	92	100	100	100	100	100						1
2	92	92	92	92	92	92	92	92	92	92	92	92	92	92	92	100	100	100	100	100						2
3	92	92	92	92	92	92	92	92	92	92	92	92	92	92	92	100	100	100	100	100						3
4	92	92	92	92	92	92	92	92	92	92	92	92	92	92	92	100	100	100	100	100						4
5	92	92	92	92	92	92	92	92	92	92	92	92	92	92	92	100	100	100	100	100						5
6	92	92	92	92	92	46	46	46	46	46	92	92	92	92	92	100	100	100	100	100						6
ID	28	28	28	28	28	39	39	39	39	39	29	29	29	29	29	19	19	19	19	19						ID
[DEG]	68~84.7	69~84.7	68~84.7	67~84.7	78~84.7	70~84.7	70~84.7	71~84.7	71~84.7	78~84.7	71~84.7	72~84.7	73~84.7	73~84.7	79~84.7	73~84.7	74~84.7	75~84.7	76~84.7	78~84.7						[DEG]
	1	1	1	1	1	1	1	1	1	1	1	1	1	1	1	1	1	1	1	1						
	8.7t	8.7t	8.7t	8.7t	8.7t	8.7t	8.7t	8.7t	8.7t	8.7t	8.7t	8.7t	8.7t	8.7t	8.7t	8.7t	8.7t	8.7t	8.7t	8.7t						

FLJ	1.6m + 7.4m	11.9 t	8.0m x 5.0m	360 °	JPN

m	11.4	11.4	11.4	11.4	11.4	15.1	15.1	15.1	15.1	15.1	15.1	15.1	15.1	15.1	15.1	15.1	15.1	15.1	15.1	15.1	18.8	18.8	18.8	18.8	18.8	m
°	5	15	30	45	60	5	15	30	45	60	5	15	30	45	60	5	15	30	45	60	5	15	30	45	60	°
3.0	7.3					7.3					7.3					7.3					7.3					3.0
3.5	7.3					7.3					7.3					7.3					7.3					3.5
4.0	7.3	7.3				7.3	7.3				7.3	7.3				7.3	7.3				7.3					4.0
4.5	7.3	7.3				7.3	7.3				7.3	7.3				7.3	7.3				7.3					4.5
5.0	7.3	7.3	7.3			7.3	7.3				7.3	7.3				7.3	7.3				7.3	7.3				5.0
6.0	7.3	7.3	7.3			7.3	7.3	7.3			7.3	7.3	7.3			7.3	7.3	7.3			7.3	7.3	7.3			6.0
7.0	7.3	7.3	7.3	6.5	5.0	7.3	7.3	7.3	6.7		7.3	7.3	7.3	6.7		7.3	7.3	7.3	6.7		7.3	7.3	7.3			7.0
8.0	7.3	7.3	7.3	6.3	4.9	7.3	7.3	7.3	6.5	5.0	7.3	7.3	7.3	6.5	5.0	7.3	7.3	7.3	6.5	5.0	7.3	7.3	7.3	6.6	5.0	8.0
9.0	7.3	7.3	7.2	6.0		7.3	7.3	7.3	6.3	4.9	7.3	7.3	7.3	6.3	4.9	7.3	7.3	7.3	6.3	4.9	7.3	7.3	7.3	6.4	4.9	9.0
10.0	7.3	7.3	6.9	5.9		7.3	7.3	7.3	6.1		7.3	7.3	7.3	6.1		7.3	7.3	7.3	6.1		7.3	7.3	7.3	6.3	4.9	10.0
11.0	7.3	7.3	6.6	5.7		7.3	7.3	7.0	5.9		7.3	7.3	7.0	5.9		7.3	7.3	7.0	5.9		7.3	7.3	7.3	6.1		11.0
12.0	7.3	7.0	6.3			7.3	7.3	6.8	5.8		7.3	7.3	6.8	5.8		7.3	7.3	6.8	5.8		7.3	7.3	7.2	6.0		12.0
14.0	6.4	6.2	5.9			7.3	7.1	6.3			7.3	7.1	6.3			7.3	7.1	6.3			7.3	7.3	6.7	5.7		14.0
16.0	5.7	5.7				6.6	6.4	5.9			6.4	6.4	5.9			6.1	6.4	5.9			7.0	7.1	6.3			16.0
18.0						5.2	5.3				4.9	5.1				4.7	4.8				5.6	5.7	6.0			18.0
20.0						4.0					3.8					3.6					4.4	4.6				20.0
22.0																					3.5	3.6				22.0
24.0																					2.8					24.0
26.0																										26.0
28.0																										28.0
30.0																										30.0
32.0																										32.0
34.0																										34.0
36.0																										36.0
38.0																										38.0
40.0																										40.0
42.0																										42.0
44.0																										44.0
46.0																										46.0
48.0																										48.0
50.0																										50.0
52.0																										52.0
54.0																										54.0
56.0																										56.0
58.0																										58.0
60.0																										60.0
64.0																										64.0
1	0	0	0	0	0	0	0	0	0	0	0	0	0	0	0	0	0	0	0	0	0	0	0	0	0	1
2	0	0	0	0	0	0	0	0	0	0	0	0	0	0	0	46	46	46	46	46	0	0	0	0	0	2
3	0	0	0	0	0	0	0	0	0	0	46	46	46	46	46	0	0	0	0	0	0	0	0	0	0	3
4	0	0	0	0	0	46	46	46	46	46	0	0	0	0	0	0	0	0	0	0	0	0	0	0	0	4
5	0	0	0	0	0	0	0	0	0	0	0	0	0	0	0	0	0	0	0	0	46	46	46	46	46	5
6	0	0	0	0	0	0	0	0	0	0	0	0	0	0	0	0	0	0	0	0	46	46	46	46	46	6
ID	1	1	1	1	1	76	76	76	76	76	105	105	105	105	105	131	131	131	131	131	30	30	30	30	30	ID
[DEG]	0~84.7	0~84.7	0~84.7	0~84.7	0~84.7	24~84.7	37~84.7	48~84.7	64~84.7	75~84.7	24~84.7	37~84.7	48~84.7	64~84.7	75~84.7	24~84.7	37~84.7	48~84.7	64~84.7	75~84.7	21~84.7	33~84.7	50~84.7	63~84.7	75~84.7	[DEG]
	1	1	1	1	1	1	1	1	1	1	1	1	1	1	1	1	1	1	1	1	1	1	1	1	1	
	8.7t	8.7t	8.7t	8.7t	8.7t	8.7t	8.7t	8.7t	8.7t	8.7t	8.7t	8.7t	8.7t	8.7t	8.7t	8.7t	8.7t	8.7t	8.7t	8.7t	8.7t	8.7t	8.7t	8.7t	8.7t	

フルオートラフィングジブ

FLJ	1.6m + 7.4m	11.9 t	8.0m x 5.0m	360 °	JPN

m	18.8	18.8	18.8	18.8	18.8	18.8	18.8	18.8	18.8	18.8	18.8	18.8	18.8	18.8	18.8	22.6	22.6	22.6	22.6	22.6	26.3	26.3	26.3	26.3	26.3	m
°	5	15	30	45	60	5	15	30	45	60	5	15	30	45	60	5	15	30	45	60	5	15	30	45	60	°
3.0	7.3					7.3					7.3															3.0
3.5	7.3					7.3					7.3															3.5
4.0	7.3					7.3	7.3				7.3	7.3				7.3										4.0
4.5	7.3					7.3	7.3				7.3	7.3				7.3										4.5
5.0	7.3	7.3				7.3	7.3				7.3	7.3				7.3	7.3				7.3					5.0
6.0	7.3	7.3	7.3			7.3	7.3	7.3			7.3	7.3	7.3			7.3	7.3				7.3	7.3				6.0
7.0	7.3	7.3	7.3	6.9		7.3	7.3	7.3	6.9		7.3	7.3	7.3	6.9		7.3	7.3	7.3			7.3	7.3				7.0
8.0	7.3	7.3	7.3	6.6	5.0	7.3	7.3	7.3	6.6	5.0	7.3	7.3	7.3	6.6	5.0	7.3	7.3	7.3	6.8		7.3	7.3	7.3			8.0
9.0	7.3	7.3	7.3	6.4	4.9	7.3	7.3	7.3	6.4	4.9	7.3	7.3	7.3	6.4	4.9	7.3	7.3	7.3	6.6	5.0	7.3	7.3	7.3	6.7	5.0	9.0
10.0	7.3	7.3	7.3	6.3	4.9	7.3	7.3	7.3	6.3	4.9	7.3	7.3	7.3	6.3	4.9	7.3	7.3	7.3	6.4	4.9	7.3	7.3	7.3	6.5	4.9	10.0
11.0	7.3	7.3	7.3	6.1		7.3	7.3	7.3	6.1		7.3	7.3	7.3	6.1		7.3	7.3	7.3	6.3	4.8	7.3	7.3	7.3	6.4	4.9	11.0
12.0	7.3	7.3	7.2	6.0		7.3	7.3	7.2	6.0		7.3	7.3	7.2	6.0		7.3	7.3	7.3	6.1		7.3	7.3	7.3	6.3	4.8	12.0
14.0	7.3	7.3	6.7	5.7		7.3	7.3	6.7	5.7		7.3	7.3	6.7	5.7		7.2	6.9	6.5	5.9		6.4	6.9	7.3	6.0		14.0
16.0	6.7	7.0	6.3			6.3	6.6	6.3			5.9	6.2	6.3			6.4	6.1	5.9	5.7		4.5	4.9	5.4	5.8		16.0
18.0	5.2	5.4	5.7			4.9	5.1	5.3			4.5	4.7	4.9			5.7	5.5	5.3			3.0	3.4	3.8	4.1		18.0
20.0	4.1	4.3				3.7	3.9				3.3	3.5				4.6	4.7	4.9			2.0	2.2	2.6			20.0
22.0	3.2	3.3				2.9	3.0				2.4	2.6				3.7	3.8	3.9			1.1	1.3	1.6			22.0
24.0	2.5					2.1					1.7					2.9	3.0									24.0
26.0																2.3	2.4									26.0
28.0																										28.0
30.0																										30.0
32.0																										32.0
34.0																										34.0
36.0																										36.0
38.0																										38.0
40.0																										40.0
42.0																										42.0
44.0																										44.0
46.0																										46.0
48.0																										48.0
50.0																										50.0
52.0																										52.0
54.0																										54.0
56.0																										56.0
58.0																										58.0
60.0																										60.0
64.0																										64.0
1	0	0	0	0	0	0	0	0	0	0	0	0	0	0	0	0	0	0	0	0	92	92	92	92	92	1
2	0	0	0	0	0	0	0	0	0	0	46	46	46	46	46	0	0	0	0	0	92	92	92	92	92	2
3	0	0	0	0	0	46	46	46	46	46	46	46	46	46	46	0	0	0	0	0	0	0	0	0	0	3
4	46	46	46	46	46	46	46	46	46	46	0	0	0	0	0	0	0	0	0	0	0	0	0	0	0	4
5	46	46	46	46	46	0	0	0	0	0	0	0	0	0	0	46	46	46	46	46	0	0	0	0	0	5
6	0	0	0	0	0	0	0	0	0	0	0	0	0	0	0	92	92	92	92	92	0	0	0	0	0	6
ID	58	58	58	58	58	88	88	88	88	88	113	113	113	113	113	20	20	20	20	20	134	134	134	134	134	ID
[DEG]	20~84.7	33~84.7	50~84.7	63~84.7	75~84.7	20~84.7	32~84.7	50~84.7	63~84.7	75~84.7	20~84.7	32~84.7	50~84.7	63~84.7	75~84.7	28~84.7	30~84.7	46~84.7	63~84.7	76~84.7	48~84.7	50~84.7	52~84.7	62~84.7	76~84.7	[DEG]
	1	1	1	1	1	1	1	1	1	1	1	1	1	1	1	1	1	1	1	1	1	1	1	1	1	
	8.7t	8.7t	8.7t	8.7t	8.7t	8.7t	8.7t	8.7t	8.7t	8.7t	8.7t	8.7t	8.7t	8.7t	8.7t	8.7t	8.7t	8.7t	8.7t	8.7t	8.7t	8.7t	8.7t	8.7t	8.7t	

m	30.0	30.0	30.0	30.0	30.0	30.0	30.0	30.0	30.0	30.0	33.7	33.7	33.7	33.7	33.7	37.4	37.4	37.4	37.4	37.4	37.4	37.4	37.4	37.4	37.4	m
°	5	15	30	45	60	5	15	30	45	60	5	15	30	45	60	5	15	30	45	60	5	15	30	45	60	°
3.0																										3.0
3.5																										3.5
4.0																										4.0
4.5																										4.5
5.0	7.3					7.3																				5.0
6.0	7.3	7.3				7.3	7.3				7.3															6.0
7.0	7.3	7.3				7.3	7.3				7.3	7.3				7.1					7.3					7.0
8.0	7.3	7.3	7.3			7.3	7.3	7.3			7.3	7.3				7.1	7.1				7.3	7.3				8.0
9.0	7.3	7.3	7.3			7.3	7.3	7.3	6.8		7.3	7.3	7.3			7.1	7.1				7.3	7.3				9.0
10.0	7.3	7.3	7.3	6.6	5.0	7.3	7.3	7.3	6.6	5.0	7.3	7.3	7.3	6.7		7.1	7.1	7.1			7.3	7.3	7.3			10.0
11.0	7.3	7.3	7.3	6.5	4.9	7.3	7.3	7.3	6.5	4.9	7.3	7.3	7.3	6.6	4.9	7.1	7.1	7.1	6.7	5.0	7.3	7.3	7.2	6.7		11.0
12.0	7.3	7.3	7.1	6.4	4.9	7.3	7.3	7.3	6.4	4.9	7.3	7.3	7.3	6.5	4.9	7.1	7.1	7.1	6.6	4.9	7.3	7.3	6.9	6.4	4.9	12.0
14.0	6.8	6.6	6.3	6.1		6.4	6.9	7.3	6.1		6.4	6.9	7.3	6.2	4.8	6.5	7.0	7.1	6.3	4.8	6.9	6.6	6.2	5.9	4.8	14.0
16.0	6.0	5.8	5.6	5.5		4.5	4.9	5.5	5.9		4.5	4.9	5.5	6.0		4.6	5.0	5.6	6.1		6.1	5.9	5.7	5.5		16.0
18.0	5.3	5.2	5.1	5.0		3.0	3.4	3.9	4.2		3.0	3.4	3.9	4.3		3.2	3.5	4.1	4.4		5.3	5.4	5.2	5.0		18.0
20.0	4.5	4.7	4.6	4.5		2.0	2.3	2.7	2.9		2.0	2.3	2.7	3.0		2.1	2.4	2.8	3.1		4.2	4.4	4.7	4.6		20.0
22.0	3.6	3.7	3.9				1.4	1.7					1.7	1.9					2.1		3.3	3.5	3.7	3.9		22.0
24.0	2.8	3.0	3.1																		2.5	2.7	2.9	3.1		24.0
26.0	2.2	2.3	2.5																		1.9	2.1	2.3			26.0
28.0	1.7	1.8																			1.4	1.5	1.7			28.0
30.0	1.3	1.3																			1.0	1.1	1.2			30.0
32.0	0.9	0.9																								32.0
34.0																										34.0
36.0																										36.0
38.0																										38.0
40.0																										40.0
42.0																										42.0
44.0																										44.0
46.0																										46.0
48.0																										48.0
50.0																										50.0
52.0																										52.0
54.0																										54.0
56.0																										56.0
58.0																										58.0
60.0																										60.0
64.0																										64.0
1	0	0	0	0	0	92	92	92	92	92	92	92	92	92	92	92	92	92	92	92	0	0	0	0	0	1
2	0	0	0	0	0	92	92	92	92	92	92	92	92	92	92	92	92	92	92	92	0	0	0	0	0	2
3	0	0	0	0	0	46	46	46	46	46	92	92	92	92	92	92	92	92	92	92	46	46	46	46	46	3
4	46	46	46	46	46	0	0	0	0	0	0	0	0	0	0	46	46	46	46	46	92	92	92	92	92	4
5	92	92	92	92	92	0	0	0	0	0	0	0	0	0	0	0	0	0	0	0	92	92	92	92	92	5
6	92	92	92	92	92	0	0	0	0	0	0	0	0	0	0	0	0	0	0	0	92	92	92	92	92	6
ID	22	22	22	22	22	116	116	116	116	116	110	110	110	110	110	93	93	93	93	93	24	24	24	24	24	ID
[DEG]	30~84.7	32~84.7	49~84.7	63~84.7	78~84.7	57~84.7	55~84.7	57~84.7	62~84.7	78~84.7	61~84.7	62~84.7	61~84.7	62~84.7	76~84.7	64~84.7	65~84.7	67~84.7	65~84.7	78~84.7	48~84.7	50~84.7	51~84.7	62~84.7	78~84.7	[DEG]
	1	1	1	1	1	1	1	1	1	1	1	1	1	1	1	1	1	1	1	1	1	1	1	1	1	
	8.7t	8.7t	8.7t	8.7t	8.7t	8.7t	8.7t	8.7t	8.7t	8.7t	8.7t	8.7t	8.7t	8.7t	8.7t	8.7t	8.7t	8.7t	8.7t	8.7t	8.7t	8.7t	8.7t	8.7t	8.7t	

FLJ	1.6m + 7.4m	11.9 t	8.0m x 5.0m	360 °	JPN

m	41.2	41.2	41.2	41.2	41.2	44.9	44.9	44.9	44.9	44.9	44.9	44.9	44.9	44.9	44.9	48.6	48.6	48.6	48.6	48.6	48.6	48.6	48.6	48.6	48.6	m
°	5	15	30	45	60	5	15	30	45	60	5	15	30	45	60	5	15	30	45	60	5	15	30	45	60	°
3.0																										3.0
3.5																										3.5
4.0																										4.0
4.5																										4.5
5.0																										5.0
6.0																										6.0
7.0	7.3																									7.0
8.0	7.3										6.5															8.0
9.0	7.3	7.3				4.6					6.5					4.8					5.4					9.0
10.0	7.3	7.3	7.3			4.6	4.6				6.5	6.5				4.8					5.4					10.0
11.0	7.3	7.3	7.3			4.6	4.6				6.5	6.5	6.5			4.8	4.8				5.4	5.4				11.0
12.0	7.3	7.3	7.3	6.6	4.9	4.6	4.6	4.6			6.5	6.5	6.5			4.8	4.8	4.8			5.4	5.4	5.4			12.0
14.0	6.6	7.1	7.3	6.4	4.9	4.6	4.6	4.6	4.6	4.6	6.5	6.5	6.5	6.5	4.9	4.8	4.8	4.8	4.8	4.8	5.4	5.4	5.4	5.4	4.9	14.0
16.0	4.7	5.1	5.7	6.2		4.6	4.6	4.6	4.6	4.6	4.9	5.3	5.9	6.3	4.8	4.8	4.8	4.8	4.8	4.8	5.0	5.4	5.4	5.4	4.8	16.0
18.0	3.3	3.6	4.2	4.6		4.6	4.6	4.6	4.6		3.4	3.8	4.3	4.7		4.2	4.5	4.8	4.8		3.6	4.0	4.5	4.9		18.0
20.0		2.5	2.9	3.3		3.8	4.0	4.4	4.6			2.7	3.1	3.4		3.0	3.3	3.7	4.0			2.8	3.2	3.6		20.0
22.0				2.2		2.9	3.1	3.4	3.6					2.4			2.4	2.8	3.0					2.6		22.0
24.0						2.1	2.3	2.6	2.8										2.2							24.0
26.0						1.5	1.7	1.9	2.1																	26.0
28.0								1.4	1.5																	28.0
30.0																										30.0
32.0																										32.0
34.0																										34.0
36.0																										36.0
38.0																										38.0
40.0																										40.0
42.0																										42.0
44.0																										44.0
46.0																										46.0
48.0																										48.0
50.0																										50.0
52.0																										52.0
54.0																										54.0
56.0																										56.0
58.0																										58.0
60.0																										60.0
64.0																										64.0
1	92	92	92	92	92	0	0	0	0	0	92	92	92	92	92	46	46	46	46	46	92	92	92	92	92	1
2	92	92	92	92	92	46	46	46	46	46	92	92	92	92	92	92	92	92	92	92	92	92	92	92	92	2
3	92	92	92	92	92	92	92	92	92	92	92	92	92	92	92	92	92	92	92	92	92	92	92	92	92	3
4	92	92	92	92	92	92	92	92	92	92	92	92	92	92	92	92	92	92	92	92	92	92	92	92	92	4
5	0	0	0	0	0	92	92	92	92	92	46	46	46	46	46	92	92	92	92	92	92	92	92	92	92	5
6	0	0	0	0	0	92	92	92	92	92	0	0	0	0	0	46	46	46	46	46	0	0	0	0	0	6
ID	83	83	83	83	83	26	26	26	26	26	65	65	65	65	65	38	38	38	38	38	49	49	49	49	49	ID
[DEG]	69~84.7	67~84.7	69~84.7	68~84.7	79~84.7	61~84.7	62~84.7	61~84.7	62~84.7	78~84.7	71~84.7	69~84.7	71~84.7	70~84.7	78~84.7	70~84.7	69~84.7	71~84.7	69~84.7	79~84.7	72~84.7	71~84.7	73~84.7	72~84.7	79~84.7	[DEG]
	1	1	1	1	1	1	1	1	1	1	1	1	1	1	1	1	1	1	1	1	1	1	1	1	1	
	8.7t	8.7t	8.7t	8.7t	8.7t	8.7t	8.7t	8.7t	8.7t	8.7t	8.7t	8.7t	8.7t	8.7t	8.7t	8.7t	8.7t	8.7t	8.7t	8.7t	8.7t	8.7t	8.7t	8.7t	8.7t	

m	52.3	52.3	52.3	52.3	52.3	52.3	52.3	52.3	52.3	52.3	56.0	56.0	56.0	56.0	56.0	60.0	60.0	60.0	60.0	60.0						m
°	5	15	30	45	60	5	15	30	45	60	5	15	30	45	60	5	15	30	45	60						°
3.0																										3.0
3.5																										3.5
4.0																										4.0
4.5																										4.5
5.0																										5.0
6.0																										6.0
7.0																										7.0
8.0																										8.0
9.0																										9.0
10.0	3.9					4.4																				10.0
11.0	3.9					4.4					3.7															11.0
12.0	3.9	3.9				4.4	4.4				3.7															12.0
14.0	3.9	3.9	3.9			4.4	4.4	4.4			3.7	3.7	3.7			3.2	3.2									14.0
16.0	3.9	3.9	3.9	3.9	3.9	4.4	4.4	4.4	4.4	4.4	3.7	3.7	3.7	3.7	3.7	3.2	3.2	3.2	3.2							16.0
18.0	3.9	3.9	3.9	3.9	3.9	3.8	4.2	4.4	4.4	4.4	3.7	3.7	3.7	3.7	3.7	3.2	3.2	3.2	3.2	3.2						18.0
20.0	3.2	3.5	3.9	3.9			3.0	3.4	3.8			3.2	3.6	3.7				3.2	3.2	3.2						20.0
22.0		2.6	2.9	3.2					2.7					2.9												22.0
24.0				2.3																						24.0
26.0																										26.0
28.0																										28.0
30.0																										30.0
32.0																										32.0
34.0																										34.0
36.0																										36.0
38.0																										38.0
40.0																										40.0
42.0																										42.0
44.0																										44.0
46.0																										46.0
48.0																										48.0
50.0																										50.0
52.0																										52.0
54.0																										54.0
56.0																										56.0
58.0																										58.0
60.0																										60.0
64.0																										64.0
1	46	46	46	46	46	92	92	92	92	92	92	92	92	92	92	100	100	100	100	100						1
2	92	92	92	92	92	92	92	92	92	92	92	92	92	92	92	100	100	100	100	100						2
3	92	92	92	92	92	92	92	92	92	92	92	92	92	92	92	100	100	100	100	100						3
4	92	92	92	92	92	92	92	92	92	92	92	92	92	92	92	100	100	100	100	100						4
5	92	92	92	92	92	92	92	92	92	92	92	92	92	92	92	100	100	100	100	100						5
6	92	92	92	92	92	46	46	46	46	46	92	92	92	92	92	100	100	100	100	100						6
ID	28	28	28	28	28	39	39	39	39	39	29	29	29	29	29	19	19	19	19	19						ID
[DEG]	72~84.7	71~84.7	72~84.7	71~84.7	78~84.7	74~84.7	73~84.7	74~84.7	73~84.7	78~84.7	75~84.7	74~84.7	76~84.7	75~84.7	79~84.7	76~84.7	77~84.7	77~84.7	78~84.7	79~84.7						[DEG]
	1	1	1	1	1	1	1	1	1	1	1	1	1	1	1	1	1	1	1	1						
	8.7t	8.7t	8.7t	8.7t	8.7t	8.7t	8.7t	8.7t	8.7t	8.7t	8.7t	8.7t	8.7t	8.7t	8.7t	8.7t	8.7t	8.7t	8.7t	8.7t						

フルオートラフィングジブ

FLJ	1.6m + 12.4m	11.9 t	8.0m x 5.0m	360 °	JPN

m	11.4	11.4	11.4	11.4	11.4	15.1	15.1	15.1	15.1	15.1	15.1	15.1	15.1	15.1	15.1	15.1	15.1	15.1	15.1	15.1	18.8	18.8	18.8	18.8	18.8	m
°	5	15	30	45	60	5	15	30	45	60	5	15	30	45	60	5	15	30	45	60	5	15	30	45	60	°
3.0	4.3																									3.0
3.5	4.3																									3.5
4.0	4.3					4.3					4.3					4.3					4.3					4.0
4.5	4.3					4.3					4.3					4.3					4.3					4.5
5.0	4.3					4.3					4.3					4.3					4.3					5.0
6.0	4.3	4.3				4.3	4.3				4.3	4.3				4.3	4.3				4.3					6.0
7.0	4.3	4.3				4.3	4.3				4.3	4.3				4.3	4.3				4.3	4.3				7.0
8.0	4.3	4.3				4.3	4.3				4.3	4.3				4.3	4.3				4.3	4.3				8.0
9.0	4.3	4.3	4.3			4.3	4.3	4.3			4.3	4.3	4.3			4.3	4.3	4.3			4.3	4.3				9.0
10.0	4.3	4.3	4.1			4.3	4.3	4.3			4.3	4.3	4.3			4.3	4.3	4.3			4.3	4.3	4.3			10.0
11.0	4.3	4.3	3.9	3.2		4.3	4.3	4.1	3.3		4.3	4.3	4.1	3.3		4.3	4.3	4.1	3.3		4.3	4.3	4.1			11.0
12.0	4.3	4.3	3.7	3.1		4.3	4.3	3.9	3.2		4.3	4.3	3.9	3.2		4.3	4.3	3.9	3.2		4.3	4.3	3.9	3.3		12.0
14.0	4.3	4.0	3.3	2.9		4.3	4.3	3.5	3.0		4.3	4.3	3.5	3.0		4.3	4.3	3.5	3.0		4.3	4.3	3.7	3.1		14.0
16.0	3.8	3.5	3.0	2.7		4.3	3.9	3.3	2.8		4.3	3.9	3.3	2.8		4.3	3.9	3.3	2.8		4.3	4.1	3.4	2.9		16.0
18.0	3.4	3.2	2.8			3.9	3.6	3.0	2.7		3.9	3.6	3.0	2.7		3.9	3.6	3.0	2.7		4.3	3.8	3.2	2.8		18.0
20.0	3.0	2.9				3.5	3.3	2.9			3.5	3.3	2.9			3.5	3.3	2.9			4.0	3.5	3.0	2.7		20.0
22.0	2.7					3.2	3.0				3.2	3.0				3.2	3.0				3.6	3.3	2.9			22.0
24.0						2.9	2.8				2.9	2.8				2.9	2.8				3.3	3.1	2.8			24.0
26.0																					2.9	2.9				26.0
28.0																					2.4					28.0
30.0																										30.0
32.0																										32.0
34.0																										34.0
36.0																										36.0
38.0																										38.0
40.0																										40.0
42.0																										42.0
44.0																										44.0
46.0																										46.0
48.0																										48.0
50.0																										50.0
52.0																										52.0
54.0																										54.0
56.0																										56.0
58.0																										58.0
60.0																										60.0
64.0																										64.0
1	0	0	0	0		0	0	0	0		0	0	0	0		0	0	0	0		0	0	0	0		1
2	0	0	0	0		0	0	0	0		0	0	0	0		46	46	46	46		0	0	0	0		2
3	0	0	0	0		0	0	0	0		46	46	46	46		0	0	0	0		0	0	0	0		3
4	0	0	0	0		46	46	46	46		0	0	0	0		0	0	0	0		0	0	0	0		4
5	0	0	0	0		0	0	0	0		0	0	0	0		0	0	0	0		46	46	46	46		5
6	0	0	0	0		0	0	0	0		0	0	0	0		0	0	0	0		46	46	46	46		6
ID	1	1	1	1		76	76	76	76		105	105	105	105		131	131	131	131		30	30	30	30		ID
[DEG]	0~84.7	0~84.7	0~84.7	0~84.7		29~84.7	32~84.7	51~84.7	60~84.7		29~84.7	31~84.7	51~84.7	60~84.7		29~84.7	31~84.7	51~84.7	60~84.7		26~84.7	37~84.7	46~84.7	60~84.7		[DEG]
	1	1	1	1		1	1	1	1		1	1	1	1		1	1	1	1		1	1	1	1		
	8.7t	8.7t	8.7t	8.7t		8.7t	8.7t	8.7t	8.7t		8.7t	8.7t	8.7t	8.7t		8.7t	8.7t	8.7t	8.7t		8.7t	8.7t	8.7t	8.7t		

m	18.8	18.8	18.8	18.8	18.8	18.8	18.8	18.8	18.8	18.8	18.8	18.8	18.8	18.8	18.8	22.6	22.6	22.6	22.6	22.6	26.3	26.3	26.3	26.3	26.3	m
°	5	15	30	45	60	5	15	30	45	60	5	15	30	45	60	5	15	30	45	60	5	15	30	45	60	°
3.0																										3.0
3.5																										3.5
4.0	4.3					4.3					4.3															4.0
4.5	4.3					4.3					4.3															4.5
5.0	4.3					4.3					4.3					4.3										5.0
6.0	4.3					4.3					4.3					4.3					4.3					6.0
7.0	4.3	4.3				4.3	4.3				4.3	4.3				4.3	4.3				4.3					7.0
8.0	4.3	4.3				4.3	4.3				4.3	4.3				4.3	4.3				4.3	4.3				8.0
9.0	4.3	4.3				4.3	4.3				4.3	4.3				4.3	4.3				4.3	4.3				9.0
10.0	4.3	4.3	4.3			4.3	4.3	4.3			4.3	4.3	4.3			4.3	4.3				4.3	4.3				10.0
11.0	4.3	4.3	4.1			4.3	4.3	4.2			4.3	4.3	4.2			4.3	4.3	4.1			4.3	4.3	4.3			11.0
12.0	4.3	4.3	4.0	3.3		4.3	4.3	4.0	3.3		4.3	4.3	4.0	3.3		4.3	4.3	4.0			4.3	4.3	4.2			12.0
14.0	4.3	4.3	3.7	3.1		4.3	4.3	3.7	3.1		4.3	4.3	3.7	3.1		4.3	4.3	3.7	3.1		4.3	4.3	3.9	3.2	2.7	14.0
16.0	4.3	4.1	3.5	2.9		4.3	4.2	3.5	2.9		4.3	4.2	3.5	2.9		4.3	4.2	3.5	3.0		4.3	4.3	3.7	3.0	2.6	16.0
18.0	4.3	3.8	3.2	2.8		4.3	3.8	3.2	2.8		4.3	3.9	3.2	2.8		4.3	3.9	3.3	2.9		4.1	4.2	3.5	2.9		18.0
20.0	4.0	3.6	3.0	2.7		4.0	3.6	3.0	2.7		4.0	3.6	3.0	2.7		4.2	3.7	3.1	2.8		3.0	3.5	3.3	2.8		20.0
22.0	3.6	3.3	2.9			3.6	3.3	2.9			3.4	3.3	2.9			3.9	3.4	3.0			2.1	2.5	3.0	2.7		22.0
24.0	3.3	3.1	2.8			3.0	3.1	2.8			2.6	2.9	2.8			3.6	3.3	2.9			1.3	1.7	2.1			24.0
26.0	2.6	2.8				2.4	2.5				2.0	2.2				2.9	3.1	2.8				1.0	1.4			26.0
28.0	2.1					1.8					1.5					2.4	2.5									28.0
30.0																2.0	2.1									30.0
32.0																1.6										32.0
34.0																										34.0
36.0																										36.0
38.0																										38.0
40.0																										40.0
42.0																										42.0
44.0																										44.0
46.0																										46.0
48.0																										48.0
50.0																										50.0
52.0																										52.0
54.0																										54.0
56.0																										56.0
58.0																										58.0
60.0																										60.0
64.0																										64.0
1	0	0	0	0		0	0	0	0		0	0	0	0		0	0	0	0		92	92	92	92	92	1
2	0	0	0	0		0	0	0	0		46	46	46	46		0	0	0	0		92	92	92	92	92	2
3	0	0	0	0		46	46	46	46		46	46	46	46		0	0	0	0		0	0	0	0	0	3
4	46	46	46	46		46	46	46	46		0	0	0	0		0	0	0	0		0	0	0	0	0	4
5	46	46	46	46		0	0	0	0		0	0	0	0		46	46	46	46		0	0	0	0	0	5
6	0	0	0	0		0	0	0	0		0	0	0	0		92	92	92	92		0	0	0	0	0	6
ID	58	58	58	58		88	88	88	88		113	113	113	113		20	20	20	20		134	134	134	134	134	ID
[DEG]	26~84.7	37~84.7	46~84.7	60~84.7		25~84.7	36~84.7	46~84.7	60~84.7		25~84.7	36~84.7	46~84.7	60~84.7		23~84.7	34~84.7	49~84.7	65~84.7		52~84.7	51~84.7	54~84.7	64~84.7	77~84.7	[DEG]
	1	1	1	1		1	1	1	1		1	1	1	1		1	1	1	1		1	1	1	1	1	
	8.7t	8.7t	8.7t	8.7t		8.7t	8.7t	8.7t	8.7t		8.7t	8.7t	8.7t	8.7t		8.7t	8.7t	8.7t	8.7t		8.7t	8.7t	8.7t	8.7t	8.7t	

FLJ	1.6m + 12.4m	11.9 t	8.0m x 5.0m	360 °	JPN

m	30.0	30.0	30.0	30.0	30.0	30.0	30.0	30.0	30.0	30.0	33.7	33.7	33.7	33.7	33.7	37.4	37.4	37.4	37.4	37.4	37.4	37.4	37.4	37.4	37.4	m
°	5	15	30	45	60	5	15	30	45	60	5	15	30	45	60	5	15	30	45	60	5	15	30	45	60	°
3.0																										3.0
3.5																										3.5
4.0																										4.0
4.5																										4.5
5.0																										5.0
6.0	4.0					4.3																				6.0
7.0	4.0					4.3					4.3					4.1										7.0
8.0	4.0					4.3					4.3					4.1					4.3					8.0
9.0	4.0	4.0				4.3	4.3				4.3	4.3				4.1					4.3					9.0
10.0	4.0	4.0				4.3	4.3				4.3	4.3				4.1	4.1				4.3	4.3				10.0
11.0	4.0	4.0				4.3	4.3	4.3			4.3	4.3				4.1	4.1				4.3	4.3				11.0
12.0	4.0	4.0	4.0			4.3	4.3	4.2			4.3	4.3	4.2			4.1	4.1				4.3	4.3				12.0
14.0	4.0	4.0	3.7	3.2		4.3	4.3	3.9	3.2		4.3	4.3	3.9	3.3		4.1	4.1	3.9			4.3	4.3	3.7			14.0
16.0	4.0	4.0	3.5	3.1		4.3	4.3	3.7	3.1		4.3	4.3	3.7	3.2	2.6	4.1	4.1	3.7	3.2	2.6	4.3	4.3	3.5	3.1		16.0
18.0	4.0	4.0	3.4	3.0		4.0	4.3	3.5	3.0		3.9	4.3	3.6	3.0	2.6	4.0	4.1	3.6	3.1	2.6	4.3	4.1	3.4	3.0		18.0
20.0	4.0	3.8	3.2	2.9		2.9	3.4	3.4	2.9		2.8	3.4	3.4	2.9		2.9	3.4	3.4	3.0		4.3	3.9	3.2	2.9		20.0
22.0	4.0	3.6	3.1	2.8		2.0	2.4	3.0	2.8		1.9	2.4	3.0	2.8		2.0	2.4	3.1	2.9		3.8	3.7	3.1	2.8		22.0
24.0	3.4	3.4	3.0	2.7		1.3	1.6	2.1	2.5			1.6	2.1	2.5				2.2	2.6		3.1	3.4	3.0	2.7		24.0
26.0	2.8	3.0	2.9					1.4						1.7					1.8		2.4	2.7	2.9	2.7		26.0
28.0	2.2	2.4	2.6																		1.9	2.1	2.4	2.6		28.0
30.0	1.8	1.9	2.1																		1.5	1.7	1.9			30.0
32.0	1.4	1.5	1.7																		1.1	1.3	1.5			32.0
34.0	1.1	1.2																				0.9	1.1			34.0
36.0																										36.0
38.0																										38.0
40.0																										40.0
42.0																										42.0
44.0																										44.0
46.0																										46.0
48.0																										48.0
50.0																										50.0
52.0																										52.0
54.0																										54.0
56.0																										56.0
58.0																										58.0
60.0																										60.0
64.0																										64.0
1	0	0	0	0		92	92	92	92		92	92	92	92	92	92	92	92	92	92	0	0	0	0		1
2	0	0	0	0		92	92	92	92		92	92	92	92	92	92	92	92	92	92	0	0	0	0		2
3	0	0	0	0		46	46	46	46		92	92	92	92	92	92	92	92	92	92	46	46	46	46		3
4	46	46	46	46		0	0	0	0		0	0	0	0	0	46	46	46	46	46	92	92	92	92		4
5	92	92	92	92		0	0	0	0		0	0	0	0	0	0	0	0	0	0	92	92	92	92		5
6	92	92	92	92		0	0	0	0		0	0	0	0	0	0	0	0	0	0	92	92	92	92		6
ID	22	22	22	22		116	116	116	116		110	110	110	110	110	93	93	93	93	93	24	24	24	24		ID
[DEG]	38~84.7	40~84.7	47~84.7	64~84.7		56~84.7	59~84.7	58~84.7	64~84.7		62~84.7	62~84.7	65~84.7	63~84.7	77~84.7	65~84.7	67~84.7	67~84.7	66~84.7	79~84.7	52~84.7	50~84.7	53~84.7	64~84.7		[DEG]
	1	1	1	1		1	1	1	1		1	1	1	1	1	1	1	1	1	1	1	1	1	1		
	8.7t	8.7t	8.7t	8.7t		8.7t	8.7t	8.7t	8.7t		8.7t	8.7t	8.7t	8.7t	8.7t	8.7t	8.7t	8.7t	8.7t	8.7t	8.7t	8.7t	8.7t	8.7t		

m	41.2	41.2	41.2	41.2	41.2	44.9	44.9	44.9	44.9	44.9	44.9	44.9	44.9	44.9	44.9	48.6	48.6	48.6	48.6	48.6	48.6	48.6	48.6	48.6	48.6	m
°	5	15	30	45	60	5	15	30	45	60	5	15	30	45	60	5	15	30	45	60	5	15	30	45	60	°
3.0																										3.0
3.5																										3.5
4.0																										4.0
4.5																										4.5
5.0																										5.0
6.0																										6.0
7.0																										7.0
8.0	4.3																									8.0
9.0	4.3										4.0															9.0
10.0	4.3					3.0					4.0					3.2					3.6					10.0
11.0	4.3	4.3				3.0					4.0	4.0				3.2					3.6					11.0
12.0	4.3	4.3				3.0	3.0				4.0	4.0				3.2	3.2				3.6	3.6				12.0
14.0	4.3	4.3	3.9			3.0	3.0				4.0	4.0				3.2	3.2				3.6	3.6				14.0
16.0	4.3	4.3	3.7	3.2		3.0	3.0	3.0			4.0	4.0	3.7			3.2	3.2	3.2			3.6	3.6	3.6			16.0
18.0	4.0	4.3	3.5	3.1	2.6	3.0	3.0	3.0	2.9		4.0	4.0	3.5	3.0	2.6	3.2	3.2	3.2	3.0		3.6	3.6	3.5	3.0		18.0
20.0	2.9	3.5	3.4	3.0	2.6	3.0	3.0	3.0	2.9		3.0	3.6	3.4	2.9	2.6	3.2	3.2	3.2	2.9	2.6	3.1	3.6	3.3	2.9	2.6	20.0
22.0		2.5	3.1	2.9		3.0	3.0	3.0	2.8			2.6	3.2	2.9		2.7	3.2	3.2	2.8	2.5		2.7	3.2	2.8	2.5	22.0
24.0			2.3	2.7		2.6	3.0	3.0	2.7				2.4	2.8			2.4	2.9	2.7				2.5	2.8		24.0
26.0				1.9		2.0	2.3	2.7	2.6					2.0				2.2	2.5					2.1		26.0
28.0						1.5	1.8	2.1	2.4										1.9							28.0
30.0							1.3	1.6	1.8																	30.0
32.0								1.1	1.3																	32.0
34.0																										34.0
36.0																										36.0
38.0																										38.0
40.0																										40.0
42.0																										42.0
44.0																										44.0
46.0																										46.0
48.0																										48.0
50.0																										50.0
52.0																										52.0
54.0																										54.0
56.0																										56.0
58.0																										58.0
60.0																										60.0
64.0																										64.0
1	92	92	92	92	92	0	0	0	0		92	92	92	92	92	46	46	46	46	46	92	92	92	92	92	1
2	92	92	92	92	92	46	46	46	46		92	92	92	92	92	92	92	92	92	92	92	92	92	92	92	2
3	92	92	92	92	92	92	92	92	92		92	92	92	92	92	92	92	92	92	92	92	92	92	92	92	3
4	92	92	92	92	92	92	92	92	92		92	92	92	92	92	92	92	92	92	92	92	92	92	92	92	4
5	0	0	0	0	0	92	92	92	92		46	46	46	46	46	92	92	92	92	92	92	92	92	92	92	5
6	0	0	0	0	0	92	92	92	92		0	0	0	0	0	46	46	46	46	46	0	0	0	0	0	6
ID	83	83	83	83	83	26	26	26	26		65	65	65	65	65	38	38	38	38	38	49	49	49	49	49	ID
[DEG]	69~84.7	69~84.7	70~84.7	69~84.7	78~84.7	63~84.7	62~84.7	62~84.7	64~84.7		71~84.7	71~84.7	71~84.7	71~84.7	79~84.7	71~84.7	71~84.7	71~84.7	70~84.7	78~84.7	73~84.7	73~84.7	73~84.7	73~84.7	78~84.7	[DEG]
	1	1	1	1	1	1	1	1	1		1	1	1	1	1	1	1	1	1	1	1	1	1	1	1	
	8.7t	8.7t	8.7t	8.7t	8.7t	8.7t	8.7t	8.7t	8.7t		8.7t	8.7t	8.7t	8.7t	8.7t	8.7t	8.7t	8.7t	8.7t	8.7t	8.7t	8.7t	8.7t	8.7t	8.7t	

フルオートラフィングジブ

FLJ	1.6m + 12.4m	11.9 t	8.0m x 5.0m	360 °	JPN

m	52.3	52.3	52.3	52.3	52.3	52.3	52.3	52.3	52.3	52.3	56.0	56.0	56.0	56.0	56.0	60.0	60.0	60.0	60.0	60.0	m
°	5	15	30	45	60	5	15	30	45	60	5	15	30	45	60	5	15	30	45	60	°
3.0																					3.0
3.5																					3.5
4.0																					4.0
4.5																					4.5
5.0																					5.0
6.0																					6.0
7.0																					7.0
8.0																					8.0
9.0																					9.0
10.0																					10.0
11.0	2.7					3.0															11.0
12.0	2.7					3.0					2.6										12.0
14.0	2.7	2.7				3.0	3.0				2.6	2.6				1.9					14.0
16.0	2.7	2.7	2.7			3.0	3.0	3.0			2.6	2.6				1.9	1.9				16.0
18.0	2.7	2.7	2.7			3.0	3.0	3.0			2.6	2.6	2.6			1.9	1.9	1.9			18.0
20.0	2.7	2.7	2.7	2.7	2.6	3.0	3.0	3.0	2.9	2.6	2.6	2.6	2.6	2.6			1.9	1.9	1.9		20.0
22.0	2.7	2.7	2.7	2.7	2.5		2.8	3.0	2.8	2.5		2.6	2.6	2.6	2.5			1.9	1.9	1.9	22.0
24.0		2.5	2.7	2.7				2.6	2.7				2.6	2.6	2.5				1.9	1.9	24.0
26.0			2.3	2.6					2.3					2.4							26.0
28.0				2.0																	28.0
30.0																					30.0
32.0																					32.0
34.0																					34.0
36.0																					36.0
38.0																					38.0
40.0																					40.0
42.0																					42.0
44.0																					44.0
46.0																					46.0
48.0																					48.0
50.0																					50.0
52.0																					52.0
54.0																					54.0
56.0																					56.0
58.0																					58.0
60.0																					60.0
64.0																					64.0
1	46	46	46	46	46	92	92	92	92	92	92	92	92	92	92	100	100	100	100	100	1
2	92	92	92	92	92	92	92	92	92	92	92	92	92	92	92	100	100	100	100	100	2
3	92	92	92	92	92	92	92	92	92	92	92	92	92	92	92	100	100	100	100	100	3
4	92	92	92	92	92	92	92	92	92	92	92	92	92	92	92	100	100	100	100	100	4
5	92	92	92	92	92	92	92	92	92	92	92	92	92	92	92	100	100	100	100	100	5
6	92	92	92	92	92	46	46	46	46	46	92	92	92	92	92	100	100	100	100	100	6
ID	28	28	28	28	28	39	39	39	39	39	29	29	29	29	29	19	19	19	19	19	ID
[DEG]	72~84.7	72~84.7	73~84.7	72~84.7	79~84.7	74~84.7	74~84.7	75~84.7	74~84.7	79~84.7	75~84.7	75~84.7	76~84.7	76~84.7	79~84.7	77~84.7	78~84.7	78~84.7	78~84.7	79~84.7	[DEG]
	1	1	1	1	1	1	1	1	1	1	1	1	1	1	1	1	1	1	1	1	
	8.7t	8.7t	8.7t	8.7t	8.7t	8.7t	8.7t	8.7t	8.7t	8.7t	8.7t	8.7t	8.7t	8.7t	8.7t	8.7t	8.7t	8.7t	8.7t	8.7t	

FLJ	1.6m + 17.4m	11.9 t	8.0m x 5.0m	360 °	JPN

m	11.4	11.4	11.4	11.4	11.4	15.1	15.1	15.1	15.1	15.1	15.1	15.1	15.1	15.1	15.1	15.1	15.1	15.1	15.1	15.1	18.8	18.8	18.8	18.8	18.8	m
°	5	15	30	45	60	5	15	30	45	60	5	15	30	45	60	5	15	30	45	60	5	15	30	45	60	°
3.0																										3.0
3.5																										3.5
4.0																										4.0
4.5	3.3																									4.5
5.0	3.3					3.1					3.3					3.3										5.0
6.0	3.3					3.1					3.3					3.3					2.7					6.0
7.0	3.3					3.1					3.3					3.3					2.7					7.0
8.0	3.3	3.3				3.1					3.3					3.3					2.7					8.0
9.0	3.3	3.3				3.1	3.1				3.3	3.3				3.3	3.3				2.7	2.7				9.0
10.0	3.3	3.2				3.1	3.1				3.3	3.3				3.3	3.3				2.7	2.7				10.0
11.0	3.3	3.0				3.1	3.1				3.3	3.1				3.3	3.1				2.7	2.7				11.0
12.0	3.2	2.9	2.5			3.1	2.9				3.3	2.9				3.3	3.0				2.7	2.7				12.0
14.0	2.9	2.6	2.3			3.1	2.7	2.3			3.1	2.7	2.3			3.1	2.7	2.3			2.7	2.7	2.3			14.0
16.0	2.6	2.4	2.1	1.8		2.8	2.5	2.2	1.9		2.8	2.5	2.2	1.9		2.8	2.5	2.2	1.9		2.7	2.5	2.2			16.0
18.0	2.4	2.2	1.9	1.7		2.6	2.3	2.0	1.8		2.6	2.3	2.0	1.8		2.6	2.3	2.0	1.8		2.7	2.4	2.0	1.8		18.0
20.0	2.2	2.0	1.8	1.6		2.4	2.1	1.9	1.7		2.4	2.1	1.9	1.7		2.4	2.1	1.9	1.7		2.5	2.2	1.9	1.7		20.0
22.0	2.0	1.9	1.7			2.2	2.0	1.8	1.6		2.2	2.0	1.8	1.6		2.2	2.0	1.8	1.6		2.3	2.1	1.8	1.6		22.0
24.0	1.8	1.7				2.1	1.9	1.7			2.1	1.9	1.7			2.1	1.9	1.7			2.2	2.0	1.8	1.6		24.0
26.0	1.7	1.6				1.9	1.8	1.6			1.9	1.8	1.6			1.9	1.8	1.6			2.0	1.9	1.7			26.0
28.0						1.8	1.6				1.8	1.6				1.8	1.6				1.9	1.8	1.6			28.0
30.0						1.6					1.6					1.6					1.9	1.7				30.0
32.0																					1.7	1.6				32.0
34.0																					1.6					34.0
36.0																										36.0
38.0																										38.0
40.0																										40.0
42.0																										42.0
44.0																										44.0
46.0																										46.0
48.0																										48.0
50.0																										50.0
52.0																										52.0
54.0																										54.0
56.0																										56.0
58.0																										58.0
60.0																										60.0
64.0																										64.0
1	0	0	0	0		0	0	0	0		0	0	0	0		0	0	0	0		0	0	0	0		1
2	0	0	0	0		0	0	0	0		0	0	0	0		46	46	46	46		0	0	0	0		2
3	0	0	0	0		0	0	0	0		46	46	46	46		0	0	0	0		0	0	0	0		3
4	0	0	0	0		46	46	46	46		0	0	0	0		0	0	0	0		0	0	0	0		4
5	0	0	0	0		0	0	0	0		0	0	0	0		0	0	0	0		46	46	46	46		5
6	0	0	0	0		0	0	0	0		0	0	0	0		0	0	0	0		46	46	46	46		6
ID	1	1	1	1		76	76	76	76		105	105	105	105		131	131	131	131		30	30	30	30		ID
[DEG]	0~84.7	0~84.7	0~84.7	0~84.7		23~84.7	36~84.7	47~84.7	63~84.7		23~84.7	36~84.7	47~84.7	63~84.7		23~84.7	36~84.7	47~84.7	63~84.7		21~84.7	33~84.7	49~84.7	63~84.7		[DEG]
	1	1	1	1		1	1	1	1		1	1	1	1		1	1	1	1		1	1	1	1		
	8.7t	8.7t	8.7t	8.7t		8.7t	8.7t	8.7t	8.7t		8.7t	8.7t	8.7t	8.7t		8.7t	8.7t	8.7t	8.7t		8.7t	8.7t	8.7t	8.7t		

FLJ	1.6m + 17.4m	11.9 t	8.0m x 5.0m	360 °	JPN

m	18.8	18.8	18.8	18.8	18.8	18.8	18.8	18.8	18.8	18.8	18.8	18.8	18.8	18.8	18.8	22.6	22.6	22.6	22.6	22.6	26.3	26.3	26.3	26.3	26.3	m
°	5	15	30	45	60	5	15	30	45	60	5	15	30	45	60	5	15	30	45	60	5	15	30	45	60	°
3.0																										3.0
3.5																										3.5
4.0																										4.0
4.5																										4.5
5.0																										5.0
6.0	2.9					3.2					3.3					2.5										6.0
7.0	2.9					3.2					3.3					2.5					3.3					7.0
8.0	2.9					3.2					3.3					2.5					3.3					8.0
9.0	2.9	2.9				3.2	3.2				3.3	3.3				2.5					3.3					9.0
10.0	2.9	2.9				3.2	3.2				3.3	3.3				2.5	2.5				3.3	3.3				10.0
11.0	2.9	2.9				3.2	3.2				3.3	3.2				2.5	2.5				3.3	3.3				11.0
12.0	2.9	2.9				3.2	3.0				3.3	3.0				2.5	2.5				3.3	3.2				12.0
14.0	2.9	2.8	2.3			3.2	2.8	2.3			3.2	2.8	2.3			2.5	2.5	2.3			3.3	2.9	2.4			14.0
16.0	2.9	2.5	2.2	1.9		2.9	2.6	2.2	1.9		3.0	2.6	2.2	1.9		2.5	2.5	2.2			3.2	2.7	2.2			16.0
18.0	2.7	2.4	2.1	1.8		2.7	2.4	2.1	1.8		2.7	2.4	2.1	1.8		2.5	2.4	2.1	1.8		3.0	2.5	2.1	1.9		18.0
20.0	2.5	2.2	1.9	1.7		2.5	2.2	1.9	1.7		2.5	2.2	2.0	1.7		2.5	2.3	1.9	1.7		2.8	2.4	2.0	1.8		20.0
22.0	2.3	2.1	1.9	1.6		2.3	2.1	1.9	1.6		2.4	2.1	1.9	1.6		2.4	2.1	1.9	1.7		2.6	2.3	1.9	1.7		22.0
24.0	2.2	2.0	1.8	1.6		2.2	2.0	1.8	1.6		2.2	2.0	1.8	1.6		2.3	2.0	1.8	1.6		2.1	2.1	1.9	1.6		24.0
26.0	2.1	1.9	1.7			2.1	1.9	1.7			2.1	1.9	1.7			2.1	1.9	1.7	1.5		1.5	1.9	1.8	1.6		26.0
28.0	1.9	1.8	1.6			2.0	1.8	1.6			2.0	1.8	1.6			2.0	1.8	1.7			1.0	1.3	1.7	1.5		28.0
30.0	1.9	1.7				1.9	1.7				1.7	1.7				1.9	1.8	1.6					1.3			30.0
32.0	1.7	1.6				1.6	1.6				1.3	1.5				1.8	1.7									32.0
34.0	1.5					1.3					1.0					1.7	1.6									34.0
36.0																1.4										36.0
38.0																										38.0
40.0																										40.0
42.0																										42.0
44.0																										44.0
46.0																										46.0
48.0																										48.0
50.0																										50.0
52.0																										52.0
54.0																										54.0
56.0																										56.0
58.0																										58.0
60.0																										60.0
64.0																										64.0
1	0	0	0	0		0	0	0	0		0	0	0	0		0	0	0	0		92	92	92	92		1
2	0	0	0	0		0	0	0	0		46	46	46	46		0	0	0	0		92	92	92	92		2
3	0	0	0	0		46	46	46	46		46	46	46	46		0	0	0	0		0	0	0	0		3
4	46	46	46	46		46	46	46	46		0	0	0	0		0	0	0	0		0	0	0	0		4
5	46	46	46	46		0	0	0	0		0	0	0	0		46	46	46	46		0	0	0	0		5
6	0	0	0	0		0	0	0	0		0	0	0	0		92	92	92	92		0	0	0	0		6
ID	58	58	58	58		88	88	88	88		113	113	113	113		20	20	20	20		134	134	134	134		ID
[DEG]	20~84.7	32~84.7	49~84.7	63~84.7		20~84.7	32~84.7	49~84.7	63~84.7		20~84.7	32~84.7	49~84.7	63~84.7		28~84.7	37~84.7	51~84.7	63~84.7		52~84.7	55~84.7	56~84.7	62~84.7		[DEG]
	1	1	1	1		1	1	1	1		1	1	1	1		1	1	1	1		1	1	1	1		
	8.7t	8.7t	8.7t	8.7t		8.7t	8.7t	8.7t	8.7t		8.7t	8.7t	8.7t	8.7t		8.7t	8.7t	8.7t	8.7t		8.7t	8.7t	8.7t	8.7t		

m	30.0	30.0	30.0	30.0	30.0	30.0	30.0	30.0	30.0	30.0	33.7	33.7	33.7	33.7	33.7	37.4	37.4	37.4	37.4	37.4	37.4	37.4	37.4	37.4	37.4	m
°	5	15	30	45	60	5	15	30	45	60	5	15	30	45	60	5	15	30	45	60	5	15	30	45	60	°
3.0																										3.0
3.5																										3.5
4.0																										4.0
4.5																										4.5
5.0																										5.0
6.0																										6.0
7.0																										7.0
8.0	2.3					3.2					3.1															8.0
9.0	2.3					3.2					3.1					2.4					2.5					9.0
10.0	2.3					3.2					3.1					2.4					2.5					10.0
11.0	2.3	2.3				3.2	3.2				3.1					2.4					2.5					11.0
12.0	2.3	2.3				3.2	3.2				3.1	3.1				2.4	2.4				2.5					12.0
14.0	2.3	2.3				3.2	2.9				3.1	3.0				2.4	2.4				2.5	2.5				14.0
16.0	2.3	2.3	2.2			3.2	2.8	2.3			3.1	2.8	2.3			2.4	2.4	2.2			2.5	2.5				16.0
18.0	2.3	2.3	2.1			3.1	2.6	2.2	1.9		3.1	2.6	2.2			2.4	2.4	2.2			2.5	2.5	2.1			18.0
20.0	2.3	2.3	2.0	1.8		2.9	2.4	2.1	1.8	1.5	2.9	2.5	2.1	1.8		2.4	2.4	2.1	1.8		2.5	2.4	2.0	1.8		20.0
22.0	2.3	2.2	1.9	1.7		2.7	2.3	2.0	1.7	1.5	2.6	2.3	2.0	1.8		2.4	2.4	2.0	1.8	1.5	2.5	2.2	1.9	1.7	1.5	22.0
24.0	2.3	2.1	1.8	1.7		2.0	2.2	1.9	1.7		1.9	2.2	1.9	1.7		1.9	2.2	1.9	1.7	1.5	2.5	2.1	1.8	1.7	1.5	24.0
26.0	2.3	2.0	1.8	1.6		1.4	1.8	1.8	1.6			1.8	1.8	1.6			1.8	1.8	1.7		2.4	2.1	1.8	1.6		26.0
28.0	2.2	1.9	1.7	1.6			1.2	1.8	1.6				1.8	1.6				1.8	1.6		2.2	2.0	1.7	1.6		28.0
30.0	2.1	1.8	1.6	1.5				1.2	1.5					1.5					1.6		1.9	1.9	1.7	1.5		30.0
32.0	1.8	1.8	1.6																		1.5	1.7	1.6	1.5		32.0
34.0	1.5	1.7	1.6																		1.1	1.4	1.6	1.5		34.0
36.0		1.3	1.5																			1.0	1.3			36.0
38.0		1.0																					1.0			38.0
40.0																										40.0
42.0																										42.0
44.0																										44.0
46.0																										46.0
48.0																										48.0
50.0																										50.0
52.0																										52.0
54.0																										54.0
56.0																										56.0
58.0																										58.0
60.0																										60.0
64.0																										64.0
1	0	0	0	0		92	92	92	92	92	92	92	92	92		92	92	92	92	92	0	0	0	0	0	1
2	0	0	0	0		92	92	92	92	92	92	92	92	92		92	92	92	92	92	0	0	0	0	0	2
3	0	0	0	0		46	46	46	46	46	92	92	92	92		92	92	92	92	92	46	46	46	46	46	3
4	46	46	46	46		0	0	0	0	0	0	0	0	0		46	46	46	46	46	92	92	92	92	92	4
5	92	92	92	92		0	0	0	0	0	0	0	0	0		0	0	0	0	0	92	92	92	92	92	5
6	92	92	92	92		0	0	0	0	0	0	0	0	0		0	0	0	0	0	92	92	92	92	92	6
ID	22	22	22	22		116	116	116	116	116	110	110	110	110		93	93	93	93	93	24	24	24	24	24	ID
[DEG]	47~84.7	42~84.7	49~84.7	63~84.7		59~84.7	59~84.7	59~84.7	62~84.7	77~84.7	64~84.7	65~84.7	66~84.7	65~84.7		66~84.7	67~84.7	68~84.7	68~84.7	77~84.7	54~84.7	54~84.7	54~84.7	63~84.7	78~84.7	[DEG]
	1	1	1	1		1	1	1	1	1	1	1	1	1		1	1	1	1	1	1	1	1	1	1	
	8.7t	8.7t	8.7t	8.7t		8.7t	8.7t	8.7t	8.7t	8.7t	8.7t	8.7t	8.7t	8.7t		8.7t	8.7t	8.7t	8.7t	8.7t	8.7t	8.7t	8.7t	8.7t	8.7t	

フルオートラフィングジブ

FLJ	1.6m + 17.4m	11.9 t	8.0m x 5.0m	360 °	JPN

m	41.2	41.2	41.2	41.2	41.2	44.9	44.9	44.9	44.9	44.9	44.9	44.9	44.9	44.9	44.9	48.6	48.6	48.6	48.6	48.6	48.6	48.6	48.6	48.6	48.6	m
°	5	15	30	45	60	5	15	30	45	60	5	15	30	45	60	5	15	30	45	60	5	15	30	45	60	°
3.0																										3.0
3.5																										3.5
4.0																										4.0
4.5																										4.5
5.0																										5.0
6.0																										6.0
7.0																										7.0
8.0																										8.0
9.0																										9.0
10.0	2.7										2.4															10.0
11.0	2.7					1.9					2.4					2.0					2.2					11.0
12.0	2.7					1.9					2.4					2.0					2.2					12.0
14.0	2.7	2.7				1.9	1.9				2.4	2.4				2.0	2.0				2.2	2.2				14.0
16.0	2.7	2.7				1.9	1.9				2.4	2.4				2.0	2.0				2.2	2.2				16.0
18.0	2.7	2.6	2.1			1.9	1.9	1.9			2.4	2.4	2.1			2.0	2.0				2.2	2.2				18.0
20.0	2.7	2.5	2.1	1.8		1.9	1.9	1.9			2.4	2.4	2.0			2.0	2.0	2.0			2.2	2.2	2.0			20.0
22.0	2.6	2.4	2.0	1.8	1.5	1.9	1.9	1.9	1.7		2.4	2.4	2.0	1.7		2.0	2.0	1.9	1.7		2.2	2.2	1.9	1.7		22.0
24.0		2.3	1.9	1.7	1.5	1.9	1.9	1.8	1.7	1.5		2.2	1.9	1.7	1.5	2.0	2.0	1.9	1.7	1.5		2.2	1.9	1.7	1.5	24.0
26.0			1.8	1.7		1.9	1.9	1.8	1.6	1.5			1.8	1.7	1.5		2.0	1.8	1.6	1.5			1.8	1.6	1.5	26.0
28.0			1.8	1.6		1.9	1.9	1.7	1.6				1.8	1.6				1.7	1.6					1.6		28.0
30.0				1.6		1.5	1.8	1.7	1.5					1.6				1.7	1.6							30.0
32.0							1.4	1.6	1.5										1.5							32.0
34.0								1.4	1.5																	34.0
36.0									1.2																	36.0
38.0																										38.0
40.0																										40.0
42.0																										42.0
44.0																										44.0
46.0																										46.0
48.0																										48.0
50.0																										50.0
52.0																										52.0
54.0																										54.0
56.0																										56.0
58.0																										58.0
60.0																										60.0
64.0																										64.0
1	92	92	92	92	92	0	0	0	0	0	92	92	92	92	92	46	46	46	46	46	92	92	92	92	92	1
2	92	92	92	92	92	46	46	46	46	46	92	92	92	92	92	92	92	92	92	92	92	92	92	92	92	2
3	92	92	92	92	92	92	92	92	92	92	92	92	92	92	92	92	92	92	92	92	92	92	92	92	92	3
4	92	92	92	92	92	92	92	92	92	92	92	92	92	92	92	92	92	92	92	92	92	92	92	92	92	4
5	0	0	0	0	0	92	92	92	92	92	46	46	46	46	46	92	92	92	92	92	92	92	92	92	92	5
6	0	0	0	0	0	92	92	92	92	92	0	0	0	0	0	46	46	46	46	46	0	0	0	0	0	6
ID	83	83	83	83	83	26	26	26	26	26	65	65	65	65	65	38	38	38	38	38	49	49	49	49	49	ID
[DEG]	70~84.7	71~84.7	70~84.7	70~84.7	79~84.7	64~84.7	65~84.7	66~84.7	65~84.7	78~84.7	72~84.7	73~84.7	72~84.7	72~84.7	78~84.7	71~84.7	72~84.7	72~84.7	71~84.7	79~84.7	73~84.7	74~84.7	75~84.7	76~84.7	79~84.7	[DEG]
	1	1	1	1	1	1	1	1	1	1	1	1	1	1	1	1	1	1	1	1	1	1	1	1	1	
	8.7t	8.7t	8.7t	8.7t	8.7t	8.7t	8.7t	8.7t	8.7t	8.7t	8.7t	8.7t	8.7t	8.7t	8.7t	8.7t	8.7t	8.7t	8.7t	8.7t	8.7t	8.7t	8.7t	8.7t	8.7t	

m	52.3	52.3	52.3	52.3	52.3	52.3	52.3	52.3	52.3	52.3	56.0	56.0	56.0	56.0	56.0	60.0	60.0	60.0	60.0	60.0						m
°	5	15	30	45	60	5	15	30	45	60	5	15	30	45	60	5	15	30	45	60						°
3.0																										3.0
3.5																										3.5
4.0																										4.0
4.5																										4.5
5.0																										5.0
6.0																										6.0
7.0																										7.0
8.0																										8.0
9.0																										9.0
10.0																										10.0
11.0																										11.0
12.0						2.0																				12.0
14.0	1.8					2.0					1.8															14.0
16.0	1.8	1.8				2.0	2.0				1.8	1.8				1.0										16.0
18.0	1.8	1.8				2.0	2.0				1.8	1.8				1.0	1.0									18.0
20.0	1.8	1.8	1.8			2.0	2.0	2.0			1.8	1.8				1.0	1.0									20.0
22.0	1.8	1.8	1.8			2.0	2.0	1.9			1.8	1.8	1.8				1.0	1.0								22.0
24.0	1.8	1.8	1.8	1.6			2.0	1.9	1.7			1.8	1.8	1.6				1.0								24.0
26.0		1.8	1.8	1.6	1.5			1.8	1.6	1.5			1.8	1.6	1.5			1.0	1.0							26.0
28.0			1.7	1.6	1.4				1.6	1.4				1.6	1.4				1.0	1.0							28.0
30.0			1.7	1.5																1.0						30.0
32.0				1.5																						32.0
34.0																										34.0
36.0																										36.0
38.0																										38.0
40.0																										40.0
42.0																										42.0
44.0																										44.0
46.0																										46.0
48.0																										48.0
50.0																										50.0
52.0																										52.0
54.0																										54.0
56.0																										56.0
58.0																										58.0
60.0																										60.0
64.0																										64.0
1	46	46	46	46	46	92	92	92	92	92	92	92	92	92	92	100	100	100	100	100						1
2	92	92	92	92	92	92	92	92	92	92	92	92	92	92	92	100	100	100	100	100						2
3	92	92	92	92	92	92	92	92	92	92	92	92	92	92	92	100	100	100	100	100						3
4	92	92	92	92	92	92	92	92	92	92	92	92	92	92	92	100	100	100	100	100						4
5	92	92	92	92	92	92	92	92	92	92	92	92	92	92	92	100	100	100	100	100						5
6	92	92	92	92	92	46	46	46	46	46	92	92	92	92	92	100	100	100	100	100						6
ID	28	28	28	28	28	39	39	39	39	39	29	29	29	29	29	19	19	19	19	19						ID
[DEG]	73~84.7	73~84.7	73~84.7	73~84.7	78~84.7	74~84.7	75~84.7	76~84.7	77~84.7	78~84.7	75~84.7	76~84.7	78~84.7	78~84.7	79~84.7	77~84.7	78~84.7	78~84.7	79~84.7	78~84.7						[DEG]
	1	1	1	1	1	1	1	1	1	1	1	1	1	1	1	1	1	1	1	1						
	8.7t	8.7t	8.7t	8.7t	8.7t	8.7t	8.7t	8.7t	8.7t	8.7t	8.7t	8.7t	8.7t	8.7t	8.7t	8.7t	8.7t	8.7t	8.7t	8.7t						

FLJ	1.6m + 7.4m	9.6 t	8.0m x 7.5m	360 °	JPN

m	11.4	11.4	11.4	11.4	11.4	15.1	15.1	15.1	15.1	15.1	15.1	15.1	15.1	15.1	15.1	15.1	15.1	15.1	15.1	15.1	18.8	18.8	18.8	18.8	18.8	m
°	5	15	30	45	60	5	15	30	45	60	5	15	30	45	60	5	15	30	45	60	5	15	30	45	60	°
3.0	7.3					7.3					7.3					7.3					7.3					3.0
3.5	7.3					7.3					7.3					7.3					7.3					3.5
4.0	7.3	7.3				7.3	7.3				7.3	7.3				7.3	7.3				7.3					4.0
4.5	7.3	7.3				7.3	7.3				7.3	7.3				7.3	7.3				7.3					4.5
5.0	7.3	7.3	7.3			7.3	7.3				7.3	7.3				7.3	7.3				7.3	7.3				5.0
6.0	7.3	7.3	7.3			7.3	7.3	7.3			7.3	7.3	7.3			7.3	7.3	7.3			7.3	7.3	7.3			6.0
7.0	7.3	7.3	7.3	6.5	5.0	7.3	7.3	7.3	6.7		7.3	7.3	7.3	6.7		7.3	7.3	7.3	6.7		7.3	7.3	7.3			7.0
8.0	7.3	7.3	7.3	6.3	4.9	7.3	7.3	7.3	6.5	5.0	7.3	7.3	7.3	6.5	5.0	7.3	7.3	7.3	6.5	5.0	7.3	7.3	7.3	6.6	5.0	8.0
9.0	7.3	7.3	7.2	6.0		7.3	7.3	7.3	6.3	4.9	7.3	7.3	7.3	6.3	4.9	7.3	7.3	7.3	6.3	4.9	7.3	7.3	7.3	6.4	4.9	9.0
10.0	7.3	7.3	6.9	5.9		7.3	7.3	7.3	6.1		7.3	7.3	7.3	6.1		7.3	7.3	7.3	6.1		7.3	7.3	7.3	6.3	4.9	10.0
11.0	7.3	7.3	6.6	5.7		7.3	7.3	7.0	5.9		7.3	7.3	7.0	5.9		7.3	7.3	7.0	5.9		7.3	7.3	7.3	6.1		11.0
12.0	7.3	7.0	6.3			7.3	7.3	6.8	5.8		7.3	7.3	6.8	5.8		7.3	7.3	6.8	5.8		7.3	7.3	7.2	6.0		12.0
14.0	6.4	6.2	5.9			7.3	7.1	6.3			7.3	7.1	6.3			7.3	7.1	6.3			7.3	7.3	6.7	5.7		14.0
16.0	5.7	5.7				6.8	6.4	5.9			6.8	6.4	5.9			6.8	6.4	5.9			7.3	7.1	6.3			16.0
18.0						6.0	5.9				6.0	5.9				6.0	5.9				7.0	6.6	6.0			18.0
20.0						5.5					5.5					5.5					6.3	6.1				20.0
22.0																					5.8	5.7				22.0
24.0																					5.1					24.0
26.0																										26.0
28.0																										28.0
30.0																										30.0
32.0																										32.0
34.0																										34.0
36.0																										36.0
38.0																										38.0
40.0																										40.0
42.0																										42.0
44.0																										44.0
46.0																										46.0
48.0																										48.0
50.0																										50.0
52.0																										52.0
54.0																										54.0
56.0																										56.0
58.0																										58.0
60.0																										60.0
64.0																										64.0
1	0	0	0	0	0	0	0	0	0	0	0	0	0	0	0	0	0	0	0	0	0	0	0	0	0	1
2	0	0	0	0	0	0	0	0	0	0	0	0	0	0	0	46	46	46	46	46	0	0	0	0	0	2
3	0	0	0	0	0	0	0	0	0	0	46	46	46	46	46	0	0	0	0	0	0	0	0	0	0	3
4	0	0	0	0	0	46	46	46	46	46	0	0	0	0	0	0	0	0	0	0	0	0	0	0	0	4
5	0	0	0	0	0	0	0	0	0	0	0	0	0	0	0	0	0	0	0	0	46	46	46	46	46	5
6	0	0	0	0	0	0	0	0	0	0	0	0	0	0	0	0	0	0	0	0	46	46	46	46	46	6
ID	1	1	1	1	1	76	76	76	76	76	105	105	105	105	105	131	131	131	131	131	30	30	30	30	30	ID
[DEG]	0~84.7	0~84.7	0~84.7	0~84.7	0~84.7	24~84.7	37~84.7	48~84.7	64~84.7	75~84.7	24~84.7	37~84.7	48~84.7	64~84.7	75~84.7	24~84.7	37~84.7	48~84.7	64~84.7	75~84.7	22~84.7	34~84.7	50~84.7	63~84.7	75~84.7	[DEG]
	1	1	1	1	1	1	1	1	1	1	1	1	1	1	1	1	1	1	1	1	1	1	1	1	1	
	8.7t	8.7t	8.7t	8.7t	8.7t	8.7t	8.7t	8.7t	8.7t	8.7t	8.7t	8.7t	8.7t	8.7t	8.7t	8.7t	8.7t	8.7t	8.7t	8.7t	8.7t	8.7t	8.7t	8.7t	8.7t	

m	18.8	18.8	18.8	18.8	18.8	18.8	18.8	18.8	18.8	18.8	18.8	18.8	18.8	18.8	18.8	22.6	22.6	22.6	22.6	22.6	26.3	26.3	26.3	26.3	26.3	m
°	5	15	30	45	60	5	15	30	45	60	5	15	30	45	60	5	15	30	45	60	5	15	30	45	60	°
3.0	7.3					7.3					7.3															3.0
3.5	7.3					7.3					7.3															3.5
4.0	7.3					7.3	7.3				7.3	7.3				7.3										4.0
4.5	7.3					7.3	7.3				7.3	7.3				7.3										4.5
5.0	7.3	7.3				7.3	7.3				7.3	7.3				7.3	7.3				7.3					5.0
6.0	7.3	7.3	7.3			7.3	7.3	7.3			7.3	7.3	7.3			7.3	7.3				7.3	7.3				6.0
7.0	7.3	7.3	7.3	6.9		7.3	7.3	7.3	6.9		7.3	7.3	7.3	6.9		7.3	7.3	7.3			7.3	7.3				7.0
8.0	7.3	7.3	7.3	6.6	5.0	7.3	7.3	7.3	6.6	5.0	7.3	7.3	7.3	6.6	5.0	7.3	7.3	7.3	6.8		7.3	7.3	7.3			8.0
9.0	7.3	7.3	7.3	6.4	4.9	7.3	7.3	7.3	6.4	4.9	7.3	7.3	7.3	6.4	4.9	7.3	7.3	7.3	6.6	5.0	7.3	7.3	7.3	6.7	5.0	9.0
10.0	7.3	7.3	7.3	6.3	4.9	7.3	7.3	7.3	6.3	4.9	7.3	7.3	7.3	6.3	4.9	7.3	7.3	7.3	6.4	4.9	7.3	7.3	7.3	6.5	4.9	10.0
11.0	7.3	7.3	7.3	6.1		7.3	7.3	7.3	6.1		7.3	7.3	7.3	6.1		7.3	7.3	7.3	6.3	4.8	7.3	7.3	7.3	6.4	4.9	11.0
12.0	7.3	7.3	7.2	6.0		7.3	7.3	7.2	6.0		7.3	7.3	7.2	6.0		7.3	7.3	7.3	6.1		7.3	7.3	7.3	6.3	4.8	12.0
14.0	7.3	7.3	6.7	5.7		7.3	7.3	6.7	5.7		7.3	7.3	6.7	5.7		7.2	6.9	6.5	5.9		7.3	7.3	7.3	6.0		14.0
16.0	7.3	7.1	6.3			7.3	7.1	6.3			7.3	7.1	6.3			6.4	6.1	5.9	5.7		7.3	7.3	7.0	5.8		16.0
18.0	7.0	6.6	6.0			7.0	6.6	6.0			7.0	6.6	6.0			5.7	5.5	5.3			6.1	6.6	6.6	5.7		18.0
20.0	6.3	6.1				6.3	6.1				6.2	6.1				5.1	5.0	4.9			4.4	4.7	5.2			20.0
22.0	5.8	5.7				5.4	5.5				4.8	5.0				4.6	4.5	4.5			3.0	3.3	3.7			22.0
24.0	4.7					4.2					3.7					4.2	4.1				1.9	2.2	2.4			24.0
26.0																3.8	3.8				1.0	1.2				26.0
28.0																										28.0
30.0																										30.0
32.0																										32.0
34.0																										34.0
36.0																										36.0
38.0																										38.0
40.0																										40.0
42.0																										42.0
44.0																										44.0
46.0																										46.0
48.0																										48.0
50.0																										50.0
52.0																										52.0
54.0																										54.0
56.0																										56.0
58.0																										58.0
60.0																										60.0
64.0																										64.0
1	0	0	0	0	0	0	0	0	0	0	0	0	0	0	0	0	0	0	0	0	92	92	92	92	92	1
2	0	0	0	0	0	0	0	0	0	0	46	46	46	46	46	0	0	0	0	0	92	92	92	92	92	2
3	0	0	0	0	0	46	46	46	46	46	46	46	46	46	46	0	0	0	0	0	0	0	0	0	0	3
4	46	46	46	46	46	46	46	46	46	46	0	0	0	0	0	0	0	0	0	0	0	0	0	0	0	4
5	46	46	46	46	46	0	0	0	0	0	0	0	0	0	0	46	46	46	46	46	0	0	0	0	0	5
6	0	0	0	0	0	0	0	0	0	0	0	0	0	0	0	92	92	92	92	92	0	0	0	0	0	6
ID	58	58	58	58	58	88	88	88	88	88	113	113	113	113	113	20	20	20	20	20	134	134	134	134	134	ID
[DEG]	21~84.7	33~84.7	50~84.7	63~84.7	75~84.7	21~84.7	33~84.7	50~84.7	63~84.7	75~84.7	21~84.7	33~84.7	50~84.7	63~84.7	75~84.7	29~84.7	30~84.7	46~84.7	63~84.7	76~84.7	38~84.7	40~84.7	47~84.7	63~84.7	76~84.7	[DEG]
	1	1	1	1	1	1	1	1	1	1	1	1	1	1	1	1	1	1	1	1	1	1	1	1	1	
	8.7t	8.7t	8.7t	8.7t	8.7t	8.7t	8.7t	8.7t	8.7t	8.7t	8.7t	8.7t	8.7t	8.7t	8.7t	8.7t	8.7t	8.7t	8.7t	8.7t	8.7t	8.7t	8.7t	8.7t	8.7t	

フルオートラフィングジブ

FLJ	1.6m + 7.4m	9.6 t	8.0m x 7.5m	360 °	JPN

m	30.0	30.0	30.0	30.0	30.0	30.0	30.0	30.0	30.0	30.0	33.7	33.7	33.7	33.7	33.7	37.4	37.4	37.4	37.4	37.4	37.4	37.4	37.4	37.4	37.4	m
°	5	15	30	45	60	5	15	30	45	60	5	15	30	45	60	5	15	30	45	60	5	15	30	45	60	°
m 3.0																										3.0
3.5																										3.5
4.0																										4.0
4.5																										4.5
5.0	7.3					7.3																				5.0
6.0	7.3	7.3				7.3	7.3				7.3															6.0
7.0	7.3	7.3				7.3	7.3				7.3	7.3				7.1					7.3					7.0
8.0	7.3	7.3	7.3			7.3	7.3	7.3			7.3	7.3				7.1	7.1				7.3	7.3				8.0
9.0	7.3	7.3	7.3			7.3	7.3	7.3	6.8		7.3	7.3	7.3			7.1	7.1				7.3	7.3				9.0
10.0	7.3	7.3	7.3	6.6	5.0	7.3	7.3	7.3	6.6	5.0	7.3	7.3	7.3	6.7		7.1	7.1	7.1			7.3	7.3	7.3			10.0
11.0	7.3	7.3	7.3	6.5	4.9	7.3	7.3	7.3	6.5	4.9	7.3	7.3	7.3	6.6	4.9	7.1	7.1	7.1	6.7	5.0	7.3	7.3	7.2	6.7		11.0
12.0	7.3	7.3	7.1	6.4	4.9	7.3	7.3	7.3	6.4	4.9	7.3	7.3	7.3	6.5	4.9	7.1	7.1	7.1	6.6	4.9	7.3	7.3	6.9	6.4	4.9	12.0
14.0	6.8	6.6	6.3	6.1		7.3	7.3	7.3	6.1		7.3	7.3	7.3	6.2	4.8	7.1	7.1	7.1	6.3	4.8	6.9	6.6	6.2	5.9	4.8	14.0
16.0	6.0	5.8	5.6	5.5		7.3	7.3	7.2	5.9		7.3	7.3	7.3	6.0		7.1	7.1	7.1	6.1		6.1	5.9	5.7	5.5		16.0
18.0	5.3	5.2	5.1	5.0		6.1	6.6	6.9	5.8		6.1	6.6	7.1	5.9		6.2	6.8	7.1	6.0		5.5	5.4	5.2	5.0		18.0
20.0	4.8	4.7	4.6	4.5		4.4	4.8	5.3	5.6		4.3	4.8	5.3	5.7		4.5	4.9	5.5	5.8		5.0	4.9	4.7	4.6		20.0
22.0	4.3	4.3	4.2			3.0	3.3	3.8			3.0	3.4	3.8	4.1		3.1	3.5	4.0	4.3		4.6	4.5	4.3	4.3		22.0
24.0	3.9	3.9	3.8			1.9	2.2	2.5			1.9	2.2	2.6			2.0	2.4	2.8	3.0		4.2	4.1	4.0	4.0		24.0
26.0	3.5	3.5	3.5			1.0	1.2	1.5			1.0	1.3	1.6			1.1	1.4	1.8			3.8	3.8	3.7			26.0
28.0	3.2	3.1																0.9			3.0	3.2	3.4			28.0
30.0	2.7	2.8																			2.4	2.5	2.7			30.0
32.0	2.2	2.2																			1.8	1.9	2.0			32.0
34.0	1.7																				1.3	1.4				34.0
36.0																						0.9				36.0
38.0																										38.0
40.0																										40.0
42.0																										42.0
44.0																										44.0
46.0																										46.0
48.0																										48.0
50.0																										50.0
52.0																										52.0
54.0																										54.0
56.0																										56.0
58.0																										58.0
60.0																										60.0
64.0																										64.0
% 1	0	0	0	0	0	92	92	92	92	92	92	92	92	92	92	92	92	92	92	92	0	0	0	0	0	1
2	0	0	0	0	0	92	92	92	92	92	92	92	92	92	92	92	92	92	92	92	0	0	0	0	0	2
3	0	0	0	0	0	46	46	46	46	46	92	92	92	92	92	92	92	92	92	92	46	46	46	46	46	3
4	46	46	46	46	46	0	0	0	0	0	0	0	0	0	0	46	46	46	46	46	92	92	92	92	92	4
5	92	92	92	92	92	0	0	0	0	0	0	0	0	0	0	0	0	0	0	0	92	92	92	92	92	5
6	92	92	92	92	92	0	0	0	0	0	0	0	0	0	0	0	0	0	0	0	92	92	92	92	92	6
ID	22	22	22	22	22	116	116	116	116	116	110	110	110	110	110	93	93	93	93	93	24	24	24	24	24	ID
[DEG]	24~84.7	32~84.7	50~84.7	63~84.7	78~84.7	46~84.7	47~84.7	49~84.7	63~84.7	78~84.7	51~84.7	52~84.7	54~84.7	62~84.7	76~84.7	55~84.7	56~84.7	54~84.7	62~84.7	78~84.7	42~84.7	38~84.7	48~84.7	63~84.7	78~84.7	[DEG]
	1	1	1	1	1	1	1	1	1	1	1	1	1	1	1	1	1	1	1	1	1	1	1	1	1	
	8.7t	8.7t	8.7t	8.7t	8.7t	8.7t	8.7t	8.7t	8.7t	8.7t	8.7t	8.7t	8.7t	8.7t	8.7t	8.7t	8.7t	8.7t	8.7t	8.7t	8.7t	8.7t	8.7t	8.7t	8.7t	

m	41.2	41.2	41.2	41.2	41.2	44.9	44.9	44.9	44.9	44.9	44.9	44.9	44.9	44.9	44.9	48.6	48.6	48.6	48.6	48.6	48.6	48.6	48.6	48.6	48.6	m
°	5	15	30	45	60	5	15	30	45	60	5	15	30	45	60	5	15	30	45	60	5	15	30	45	60	°
m 3.0																										3.0
3.5																										3.5
4.0																										4.0
4.5																										4.5
5.0																										5.0
6.0																										6.0
7.0	7.3																									7.0
8.0	7.3										6.5															8.0
9.0	7.3	7.3				4.6					6.5					4.8					5.4					9.0
10.0	7.3	7.3	7.3			4.6	4.6				6.5	6.5				4.8					5.4					10.0
11.0	7.3	7.3	7.3			4.6	4.6				6.5	6.5	6.5			4.8	4.8				5.4	5.4				11.0
12.0	7.3	7.3	7.3	6.6	4.9	4.6	4.6	4.6			6.5	6.5	6.5			4.8	4.8	4.8			5.4	5.4	5.4			12.0
14.0	7.3	7.3	7.3	6.4	4.9	4.6	4.6	4.6	4.6	4.6	6.5	6.5	6.5	6.5	4.9	4.8	4.8	4.8	4.8	4.8	5.4	5.4	5.4	5.4	4.9	14.0
16.0	7.3	7.3	7.3	6.2		4.6	4.6	4.6	4.6	4.6	6.5	6.5	6.5	6.3	4.8	4.8	4.8	4.8	4.8	4.8	5.4	5.4	5.4	5.4	4.8	16.0
18.0	6.4	6.9	7.2	6.1		4.6	4.6	4.6	4.6		6.5	6.5	6.5	6.1		4.8	4.8	4.8	4.8		5.4	5.4	5.4	5.4		18.0
20.0	4.6	5.1	5.6	5.9		4.6	4.6	4.6	4.6		4.9	5.3	5.9	6.0		4.8	4.8	4.8	4.8		5.1	5.4	5.4	5.4		20.0
22.0	3.3	3.6	4.1	4.5		4.6	4.5	4.3	4.2		3.5	3.9	4.4	4.7		4.4	4.8	4.8	4.7		3.7	4.1	4.5	4.9		22.0
24.0	2.2	2.5	2.9	3.2		4.2	4.2	4.0	4.0		2.4	2.7	3.1	3.4		3.3	3.6	4.0	4.3		2.6	2.9	3.3	3.6		24.0
26.0	1.3	1.6	1.9	2.1		3.3	3.5	3.8	3.7		1.5	1.8	2.1	2.4		2.4	2.6	3.0	3.2		1.7	2.0	2.3	2.6		26.0
28.0			1.1			2.5	2.7	2.9	3.1			1.0	1.3	1.5		1.6	1.8	2.1	2.3			1.2	1.5	1.7		28.0
30.0						1.8	2.0	2.2								0.9	1.2	1.4	1.6					0.9		30.0
32.0						1.3	1.4	1.6																		32.0
34.0							0.9	1.1																		34.0
36.0																										36.0
38.0																										38.0
40.0																										40.0
42.0																										42.0
44.0																										44.0
46.0																										46.0
48.0																										48.0
50.0																										50.0
52.0																										52.0
54.0																										54.0
56.0																										56.0
58.0																										58.0
60.0																										60.0
64.0																										64.0
% 1	92	92	92	92	92	0	0	0	0	0	92	92	92	92	92	46	46	46	46	46	92	92	92	92	92	1
2	92	92	92	92	92	46	46	46	46	46	92	92	92	92	92	92	92	92	92	92	92	92	92	92	92	2
3	92	92	92	92	92	92	92	92	92	92	92	92	92	92	92	92	92	92	92	92	92	92	92	92	92	3
4	92	92	92	92	92	92	92	92	92	92	92	92	92	92	92	92	92	92	92	92	92	92	92	92	92	4
5	0	0	0	0	0	92	92	92	92	92	46	46	46	46	46	92	92	92	92	92	92	92	92	92	92	5
6	0	0	0	0	0	92	92	92	92	92	0	0	0	0	0	46	46	46	46	46	0	0	0	0	0	6
ID	83	83	83	83	83	26	26	26	26	26	65	65	65	65	65	38	38	38	38	38	49	49	49	49	49	ID
[DEG]	58~84.7	60~84.7	58~84.7	62~84.7	79~84.7	54~84.7	52~84.7	53~84.7	63~84.7	78~84.7	61~84.7	60~84.7	61~84.7	62~84.7	78~84.7	59~84.7	60~84.7	61~84.7	62~84.7	79~84.7	64~84.7	62~84.7	64~84.7	62~84.7	79~84.7	[DEG]
	1	1	1	1	1	1	1	1	1	1	1	1	1	1	1	1	1	1	1	1	1	1	1	1	1	
	8.7t	8.7t	8.7t	8.7t	8.7t	8.7t	8.7t	8.7t	8.7t	8.7t	8.7t	8.7t	8.7t	8.7t	8.7t	8.7t	8.7t	8.7t	8.7t	8.7t	8.7t	8.7t	8.7t	8.7t	8.7t	

FLJ	1.6m + 7.4m	9.6 t	8.0m x 7.5m	360 °	JPN

m	52.3	52.3	52.3	52.3	52.3	52.3	52.3	52.3	52.3	52.3	56.0	56.0	56.0	56.0	56.0	60.0	60.0	60.0	60.0	60.0						m
°	5	15	30	45	60	5	15	30	45	60	5	15	30	45	60	5	15	30	45	60						°
3.0																										3.0
3.5																										3.5
4.0																										4.0
4.5																										4.5
5.0																										5.0
6.0																										6.0
7.0																										7.0
8.0																										8.0
9.0																										9.0
10.0	3.9					4.4																				10.0
11.0	3.9					4.4					3.7															11.0
12.0	3.9	3.9				4.4	4.4				3.7															12.0
14.0	3.9	3.9	3.9			4.4	4.4	4.4			3.7	3.7	3.7			3.2	3.2									14.0
16.0	3.9	3.9	3.9	3.9	3.9	4.4	4.4	4.4	4.4	4.4	3.7	3.7	3.7	3.7	3.7	3.2	3.2	3.2	3.2							16.0
18.0	3.9	3.9	3.9	3.9	3.9	4.4	4.4	4.4	4.4	4.4	3.7	3.7	3.7	3.7	3.7	3.2	3.2	3.2	3.2	3.2						18.0
20.0	3.9	3.9	3.9	3.9		4.4	4.4	4.4	4.4		3.7	3.7	3.7	3.7		3.2	3.2	3.2	3.2	3.2						20.0
22.0	3.9	3.9	3.9	3.9		3.9	4.3	4.4	4.4		3.7	3.7	3.7	3.7		3.2	3.2	3.2	3.2							22.0
24.0	3.5	3.8	3.9	3.9		2.8	3.2	3.6	3.9		3.0	3.4	3.7	3.7		3.0	3.2	3.2	3.2							24.0
26.0	2.6	2.8	3.2	3.4		1.9	2.2	2.6	2.8		2.1	2.4	2.8	3.0		2.0	2.3	2.7	3.0							26.0
28.0	1.8	2.0	2.3	2.5		1.1	1.4	1.7	2.0		1.3	1.6	1.9	2.2				1.9	2.1							28.0
30.0	1.1	1.4	1.6	1.8					1.2				1.2	1.4												30.0
32.0			1.0																							32.0
34.0																										34.0
36.0																										36.0
38.0																										38.0
40.0																										40.0
42.0																										42.0
44.0																										44.0
46.0																										46.0
48.0																										48.0
50.0																										50.0
52.0																										52.0
54.0																										54.0
56.0																										56.0
58.0																										58.0
60.0																										60.0
64.0																										64.0
1	46	46	46	46	46	92	92	92	92	92	92	92	92	92	92	100	100	100	100	100						1
2	92	92	92	92	92	92	92	92	92	92	92	92	92	92	92	100	100	100	100	100						2
3	92	92	92	92	92	92	92	92	92	92	92	92	92	92	92	100	100	100	100	100						3
4	92	92	92	92	92	92	92	92	92	92	92	92	92	92	92	100	100	100	100	100						4
5	92	92	92	92	92	92	92	92	92	92	92	92	92	92	92	100	100	100	100	100						5
6	92	92	92	92	92	46	46	46	46	46	92	92	92	92	92	100	100	100	100	100						6
ID	28	28	28	28	28	39	39	39	39	39	29	29	29	29	29	19	19	19	19	19						ID
[DEG]	61~84.7	63~84.7	61~84.7	65~84.7	78~84.7	63~84.7	65~84.7	66~84.7	65~84.7	78~84.7	66~84.7	67~84.7	66~84.7	67~84.7	79~84.7	70~84.7	71~84.7	70~84.7	71~84.7	79~84.7						[DEG]
	1	1	1	1	1	1	1	1	1	1	1	1	1	1	1	1	1	1	1	1						
	8.7t	8.7t	8.7t	8.7t	8.7t	8.7t	8.7t	8.7t	8.7t	8.7t	8.7t	8.7t	8.7t	8.7t	8.7t	8.7t	8.7t	8.7t	8.7t	8.7t						

FLJ	1.6m + 12.4m	9.6 t	8.0m x 7.5m	360 °	JPN

m	11.4	11.4	11.4	11.4	11.4	15.1	15.1	15.1	15.1	15.1	15.1	15.1	15.1	15.1	15.1	15.1	15.1	15.1	15.1	15.1	18.8	18.8	18.8	18.8	18.8	m
°	5	15	30	45	60	5	15	30	45	60	5	15	30	45	60	5	15	30	45	60	5	15	30	45	60	°
3.0	4.3																									3.0
3.5	4.3																									3.5
4.0	4.3					4.3					4.3					4.3					4.3					4.0
4.5	4.3					4.3					4.3					4.3					4.3					4.5
5.0	4.3					4.3					4.3					4.3					4.3					5.0
6.0	4.3	4.3				4.3	4.3				4.3	4.3				4.3	4.3				4.3					6.0
7.0	4.3	4.3				4.3	4.3				4.3	4.3				4.3	4.3				4.3	4.3				7.0
8.0	4.3	4.3				4.3	4.3				4.3	4.3				4.3	4.3				4.3	4.3				8.0
9.0	4.3	4.3	4.3			4.3	4.3	4.3			4.3	4.3	4.3			4.3	4.3	4.3			4.3	4.3				9.0
10.0	4.3	4.3	4.1			4.3	4.3	4.3			4.3	4.3	4.3			4.3	4.3	4.3			4.3	4.3	4.3			10.0
11.0	4.3	4.3	3.9	3.2		4.3	4.3	4.1	3.3		4.3	4.3	4.1	3.3		4.3	4.3	4.1	3.3		4.3	4.3	4.1			11.0
12.0	4.3	4.3	3.7	3.1		4.3	4.3	3.9	3.2		4.3	4.3	3.9	3.2		4.3	4.3	3.9	3.2		4.3	4.3	3.9	3.3		12.0
14.0	4.3	4.0	3.3	2.9		4.3	4.3	3.5	3.0		4.3	4.3	3.5	3.0		4.3	4.3	3.5	3.0		4.3	4.3	3.7	3.1		14.0
16.0	3.8	3.5	3.0	2.7		4.3	3.9	3.3	2.8		4.3	3.9	3.3	2.8		4.3	3.9	3.3	2.8		4.3	4.1	3.4	2.9		16.0
18.0	3.4	3.2	2.8			3.9	3.6	3.0	2.7		3.9	3.6	3.0	2.7		3.9	3.6	3.0	2.7		4.3	3.8	3.2	2.8		18.0
20.0	3.0	2.9				3.5	3.3	2.9			3.5	3.3	2.9			3.5	3.3	2.9			4.0	3.5	3.0	2.7		20.0
22.0	2.7					3.2	3.0				3.2	3.0				3.2	3.0				3.6	3.3	2.9			22.0
24.0						2.9	2.8				2.9	2.8				2.9	2.8				3.3	3.1	2.8			24.0
26.0																					3.0	2.9				26.0
28.0																					2.8					28.0
30.0																										30.0
32.0																										32.0
34.0																										34.0
36.0																										36.0
38.0																										38.0
40.0																										40.0
42.0																										42.0
44.0																										44.0
46.0																										46.0
48.0																										48.0
50.0																										50.0
52.0																										52.0
54.0																										54.0
56.0																										56.0
58.0																										58.0
60.0																										60.0
64.0																										64.0
1	0	0	0	0		0	0	0	0		0	0	0	0		0	0	0	0		0	0	0	0		1
2	0	0	0	0		0	0	0	0		0	0	0	0		46	46	46	46		0	0	0	0		2
3	0	0	0	0		0	0	0	0		46	46	46	46		0	0	0	0		0	0	0	0		3
4	0	0	0	0		46	46	46	46		0	0	0	0		0	0	0	0		0	0	0	0		4
5	0	0	0	0		0	0	0	0		0	0	0	0		0	0	0	0		46	46	46	46		5
6	0	0	0	0		0	0	0	0		0	0	0	0		0	0	0	0		46	46	46	46		6
ID	1	1	1	1		76	76	76	76		105	105	105	105		131	131	131	131		30	30	30	30		ID
[DEG]	0~84.7	0~84.7	0~84.7	0~84.7		29~84.7	32~84.7	51~84.7	60~84.7		29~84.7	31~84.7	51~84.7	60~84.7		29~84.7	31~84.7	51~84.7	60~84.7		26~84.7	37~84.7	46~84.7	60~84.7		[DEG]
	1	1	1	1		1	1	1	1		1	1	1	1		1	1	1	1		1	1	1	1		
	8.7t	8.7t	8.7t	8.7t		8.7t	8.7t	8.7t	8.7t		8.7t	8.7t	8.7t	8.7t		8.7t	8.7t	8.7t	8.7t		8.7t	8.7t	8.7t	8.7t		

フルオートラフィングジブ

FLJ	1.6m + 12.4m	9.6 t	8.0m x 7.5m	360 °	JPN

m	18.8	18.8	18.8	18.8	18.8	18.8	18.8	18.8	18.8	18.8	18.8	18.8	18.8	18.8	18.8	22.6	22.6	22.6	22.6	22.6	26.3	26.3	26.3	26.3	26.3	m
°	5	15	30	45	60	5	15	30	45	60	5	15	30	45	60	5	15	30	45	60	5	15	30	45	60	°
3.0																										3.0
3.5																										3.5
4.0	4.3					4.3					4.3															4.0
4.5	4.3					4.3					4.3															4.5
5.0	4.3					4.3					4.3					4.3										5.0
6.0	4.3					4.3					4.3					4.3					4.3					6.0
7.0	4.3	4.3				4.3	4.3				4.3	4.3				4.3	4.3				4.3					7.0
8.0	4.3	4.3				4.3	4.3				4.3	4.3				4.3	4.3				4.3	4.3				8.0
9.0	4.3	4.3				4.3	4.3				4.3	4.3				4.3	4.3				4.3	4.3				9.0
10.0	4.3	4.3	4.3			4.3	4.3	4.3			4.3	4.3	4.3			4.3	4.3				4.3	4.3				10.0
11.0	4.3	4.3	4.1			4.3	4.3	4.2			4.3	4.3	4.2			4.3	4.3	4.1			4.3	4.3	4.3			11.0
12.0	4.3	4.3	4.0	3.3		4.3	4.3	4.0	3.3		4.3	4.3	4.0	3.3		4.3	4.3	4.0			4.3	4.3	4.2			12.0
14.0	4.3	4.3	3.7	3.1		4.3	4.3	3.7	3.1		4.3	4.3	3.7	3.1		4.3	4.3	3.7	3.1		4.3	4.3	3.9	3.2	2.7	14.0
16.0	4.3	4.1	3.5	2.9		4.3	4.2	3.5	2.9		4.3	4.2	3.5	2.9		4.3	4.2	3.5	3.0		4.3	4.3	3.7	3.0	2.6	16.0
18.0	4.3	3.8	3.2	2.8		4.3	3.8	3.2	2.8		4.3	3.9	3.2	2.8		4.3	3.9	3.3	2.9		4.3	4.2	3.5	2.9		18.0
20.0	4.0	3.6	3.0	2.7		4.0	3.6	3.0	2.7		4.0	3.6	3.0	2.7		4.2	3.7	3.1	2.8		4.3	4.0	3.3	2.8		20.0
22.0	3.6	3.3	2.9			3.6	3.3	2.9			3.6	3.3	2.9			3.9	3.4	3.0			4.3	3.7	3.2	2.7		22.0
24.0	3.3	3.1	2.8			3.3	3.1	2.8			3.3	3.1	2.8			3.6	3.3	2.9			3.2	3.5	3.0			24.0
26.0	3.0	2.9				3.0	2.9				3.0	2.9				3.4	3.1	2.8			2.2	2.6	2.9			26.0
28.0	2.8					2.8					2.8					3.2	3.0				1.5	1.8	2.2			28.0
30.0																2.9	2.8					1.1				30.0
32.0																2.7										32.0
34.0																										34.0
36.0																										36.0
38.0																										38.0
40.0																										40.0
42.0																										42.0
44.0																										44.0
46.0																										46.0
48.0																										48.0
50.0																										50.0
52.0																										52.0
54.0																										54.0
56.0																										56.0
58.0																										58.0
60.0																										60.0
64.0																										64.0
1	0	0	0	0		0	0	0	0		0	0	0	0		0	0	0	0		92	92	92	92	92	1
2	0	0	0	0		0	0	0	0		46	46	46	46		0	0	0	0		92	92	92	92	92	2
3	0	0	0	0		46	46	46	46		46	46	46	46		0	0	0	0		0	0	0	0	0	3
4	46	46	46	46		46	46	46	46		0	0	0	0		0	0	0	0		0	0	0	0	0	4
5	46	46	46	46		0	0	0	0		0	0	0	0		46	46	46	46		0	0	0	0	0	5
6	0	0	0	0		0	0	0	0		0	0	0	0		92	92	92	92		0	0	0	0	0	6
ID	58	58	58	58		88	88	88	88		113	113	113	113		20	20	20	20		134	134	134	134	134	ID
[DEG]	26~84.7	37~84.7	46~84.7	60~84.7		26~84.7	37~84.7	46~84.7	60~84.7		26~84.7	37~84.7	46~84.7	60~84.7		24~84.7	34~84.7	49~84.7	65~84.7		44~84.7	42~84.7	50~84.7	64~84.7	77~84.7	[DEG]
	1	1	1	1		1	1	1	1		1	1	1	1		1	1	1	1		1	1	1	1	1	
	8.7t	8.7t	8.7t	8.7t		8.7t	8.7t	8.7t	8.7t		8.7t	8.7t	8.7t	8.7t		8.7t	8.7t	8.7t	8.7t		8.7t	8.7t	8.7t	8.7t	8.7t	

m	30.0	30.0	30.0	30.0	30.0	30.0	30.0	30.0	30.0	30.0	33.7	33.7	33.7	33.7	33.7	37.4	37.4	37.4	37.4	37.4	37.4	37.4	37.4	37.4	37.4	m
°	5	15	30	45	60	5	15	30	45	60	5	15	30	45	60	5	15	30	45	60	5	15	30	45	60	°
3.0																										3.0
3.5																										3.5
4.0																										4.0
4.5																										4.5
5.0																										5.0
6.0	4.0					4.3																				6.0
7.0	4.0					4.3					4.3					4.1										7.0
8.0	4.0					4.3					4.3					4.1					4.3					8.0
9.0	4.0	4.0				4.3	4.3				4.3	4.3				4.1					4.3					9.0
10.0	4.0	4.0				4.3	4.3				4.3	4.3				4.1	4.1				4.3	4.3				10.0
11.0	4.0	4.0				4.3	4.3	4.3			4.3	4.3				4.1	4.1				4.3	4.3				11.0
12.0	4.0	4.0	4.0			4.3	4.3	4.2			4.3	4.3	4.2			4.1	4.1				4.3	4.3				12.0
14.0	4.0	4.0	3.7	3.2		4.3	4.3	3.9	3.2		4.3	4.3	3.9	3.3		4.1	4.1	3.9			4.3	4.3	3.7			14.0
16.0	4.0	4.0	3.5	3.1		4.3	4.3	3.7	3.1		4.3	4.3	3.7	3.2	2.6	4.1	4.1	3.7	3.2	2.6	4.3	4.3	3.5	3.1		16.0
18.0	4.0	4.0	3.4	3.0		4.3	4.3	3.5	3.0		4.3	4.3	3.6	3.0	2.6	4.1	4.1	3.6	3.1	2.6	4.3	4.1	3.4	3.0		18.0
20.0	4.0	3.8	3.2	2.9		4.3	4.1	3.4	2.9		4.3	4.1	3.4	2.9		4.1	4.1	3.4	3.0		4.3	3.9	3.2	2.9		20.0
22.0	4.0	3.6	3.1	2.8		4.2	3.8	3.2	2.8		4.1	3.9	3.3	2.8		4.1	3.9	3.3	2.9		4.2	3.7	3.1	2.8		22.0
24.0	3.7	3.4	3.0	2.7		3.1	3.6	3.1	2.7		3.0	3.5	3.1	2.8		3.0	3.6	3.2	2.8		3.9	3.5	3.0	2.7		24.0
26.0	3.4	3.3	2.9			2.1	2.6	3.0			2.1	2.5	3.0	2.7		2.1	2.6	3.0	2.7		3.6	3.4	2.9	2.7		26.0
28.0	3.1	3.1	2.8			1.4	1.7	2.2			1.3	1.7	2.2			1.3	1.8	2.3	2.7		3.3	3.2	2.8	2.6		28.0
30.0	2.8	2.8	2.7				1.0	1.4				1.0	1.4				1.0	1.5			3.0	3.0	2.7			30.0
32.0	2.5	2.5	2.5																		2.4	2.6	2.7			32.0
34.0	2.2	2.2																			1.9	2.1	2.3			34.0
36.0		2.0																			1.5	1.6	1.8			36.0
38.0																					1.1	1.2				38.0
40.0																										40.0
42.0																										42.0
44.0																										44.0
46.0																										46.0
48.0																										48.0
50.0																										50.0
52.0																										52.0
54.0																										54.0
56.0																										56.0
58.0																										58.0
60.0																										60.0
64.0																										64.0
1	0	0	0	0		92	92	92	92		92	92	92	92	92	92	92	92	92	92	0	0	0	0		1
2	0	0	0	0		92	92	92	92		92	92	92	92	92	92	92	92	92	92	0	0	0	0		2
3	0	0	0	0		46	46	46	46		92	92	92	92	92	92	92	92	92	92	46	46	46	46		3
4	46	46	46	46		0	0	0	0		0	0	0	0	0	46	46	46	46	46	92	92	92	92		4
5	92	92	92	92		0	0	0	0		0	0	0	0	0	0	0	0	0	0	92	92	92	92		5
6	92	92	92	92		0	0	0	0		0	0	0	0	0	0	0	0	0	0	92	92	92	92		6
ID	22	22	22	22		116	116	116	116		110	110	110	110	110	93	93	93	93	93	24	24	24	24		ID
[DEG]	39~84.7	36~84.7	47~84.7	64~84.7		49~84.7	48~84.7	51~84.7	64~84.7		54~84.7	53~84.7	55~84.7	64~84.7	77~84.7	57~84.7	56~84.7	59~84.7	64~84.7	79~84.7	42~84.7	44~84.7	50~84.7	64~84.7		[DEG]
	1	1	1	1		1	1	1	1		1	1	1	1	1	1	1	1	1	1	1	1	1	1		
	8.7t	8.7t	8.7t	8.7t		8.7t	8.7t	8.7t	8.7t		8.7t	8.7t	8.7t	8.7t	8.7t	8.7t	8.7t	8.7t	8.7t	8.7t	8.7t	8.7t	8.7t	8.7t		

FLJ	1.6m + 12.4m	9.6 t	8.0m x 7.5m	360 °	JPN

m	41.2	41.2	41.2	41.2	41.2	44.9	44.9	44.9	44.9	44.9	44.9	44.9	44.9	44.9	44.9	48.6	48.6	48.6	48.6	48.6	48.6	48.6	48.6	48.6	48.6	m
°	5	15	30	45	60	5	15	30	45	60	5	15	30	45	60	5	15	30	45	60	5	15	30	45	60	°
3.0																										3.0
3.5																										3.5
4.0																										4.0
4.5																										4.5
5.0																										5.0
6.0																										6.0
7.0																										7.0
8.0	4.3																									8.0
9.0	4.3										4.0															9.0
10.0	4.3					3.0					4.0					3.2					3.6					10.0
11.0	4.3	4.3				3.0					4.0	4.0				3.2					3.6					11.0
12.0	4.3	4.3				3.0	3.0				4.0	4.0				3.2	3.2				3.6	3.6				12.0
14.0	4.3	4.3	3.9			3.0	3.0				4.0	4.0				3.2	3.2				3.6	3.6				14.0
16.0	4.3	4.3	3.7	3.2		3.0	3.0	3.0			4.0	4.0	3.7			3.2	3.2	3.2			3.6	3.6	3.6			16.0
18.0	4.3	4.3	3.5	3.1	2.6	3.0	3.0	3.0	2.9		4.0	4.0	3.5	3.0	2.6	3.2	3.2	3.2	3.0		3.6	3.6	3.5	3.0		18.0
20.0	4.3	4.1	3.4	3.0	2.6	3.0	3.0	3.0	2.9		4.0	4.0	3.4	2.9	2.6	3.2	3.2	3.2	2.9	2.6	3.6	3.6	3.3	2.9	2.6	20.0
22.0	4.2	4.0	3.3	2.9		3.0	3.0	3.0	2.8		4.0	3.9	3.2	2.9		3.2	3.2	3.2	2.8	2.5	3.6	3.6	3.2	2.8	2.5	22.0
24.0	3.1	3.7	3.2	2.8		3.0	3.0	3.0	2.7		3.2	3.7	3.1	2.8		3.2	3.2	3.1	2.7		3.4	3.6	3.1	2.8		24.0
26.0	2.2	2.7	3.0	2.7		3.0	3.0	2.9	2.6		2.3	2.8	3.0	2.7		3.1	3.2	3.0	2.7		2.4	2.9	3.0	2.7		26.0
28.0	1.4	1.8	2.4	2.7		3.0	3.0	2.8	2.6		1.5	2.0	2.5	2.7		2.3	2.7	2.9	2.6		1.7	2.1	2.6	2.6		28.0
30.0		1.1	1.6	1.9		2.5	2.8	2.7	2.5		0.9	1.3	1.8	2.1		1.6	2.0	2.4	2.6		1.0	1.4	1.9	2.3		30.0
32.0			0.9			1.9	2.1	2.5	2.5				1.1	1.4		1.0	1.4	1.8	2.1				1.2	1.5		32.0
34.0						1.4	1.6	1.9										1.2	1.4					0.9		34.0
36.0						0.9	1.1	1.4																		36.0
38.0								1.0																		38.0
40.0																										40.0
42.0																										42.0
44.0																										44.0
46.0																										46.0
48.0																										48.0
50.0																										50.0
52.0																										52.0
54.0																										54.0
56.0																										56.0
58.0																										58.0
60.0																										60.0
64.0																										64.0
1	92	92	92	92	92	0	0	0	0		92	92	92	92	92	46	46	46	46	46	92	92	92	92	92	1
2	92	92	92	92	92	46	46	46	46		92	92	92	92	92	92	92	92	92	92	92	92	92	92	92	2
3	92	92	92	92	92	92	92	92	92		92	92	92	92	92	92	92	92	92	92	92	92	92	92	92	3
4	92	92	92	92	92	92	92	92	92		92	92	92	92	92	92	92	92	92	92	92	92	92	92	92	4
5	0	0	0	0	0	92	92	92	92		46	46	46	46	46	92	92	92	92	92	92	92	92	92	92	5
6	0	0	0	0	0	92	92	92	92		0	0	0	0	0	46	46	46	46	46	0	0	0	0	0	6
ID	83	83	83	83	83	26	26	26	26		65	65	65	65	65	38	38	38	38	38	49	49	49	49	49	ID
[DEG]	60~84.7	59~84.7	59~84.7	64~84.7	78~84.7	53~84.7	55~84.7	54~84.7	64~84.7		60~84.7	62~84.7	62~84.7	63~84.7	79~84.7	60~84.7	62~84.7	62~84.7	64~84.7	78~84.7	63~84.7	64~84.7	64~84.7	63~84.7	78~84.7	[DEG]
	1	1	1	1	1	1	1	1	1		1	1	1	1	1	1	1	1	1	1	1	1	1	1	1	
	8.7t	8.7t	8.7t	8.7t	8.7t	8.7t	8.7t	8.7t	8.7t		8.7t	8.7t	8.7t	8.7t	8.7t	8.7t	8.7t	8.7t	8.7t	8.7t	8.7t	8.7t	8.7t	8.7t	8.7t	

m	52.3	52.3	52.3	52.3	52.3	52.3	52.3	52.3	52.3	52.3	56.0	56.0	56.0	56.0	56.0	60.0	60.0	60.0	60.0	60.0						m
°	5	15	30	45	60	5	15	30	45	60	5	15	30	45	60	5	15	30	45	60						°
3.0																										3.0
3.5																										3.5
4.0																										4.0
4.5																										4.5
5.0																										5.0
6.0																										6.0
7.0																										7.0
8.0																										8.0
9.0																										9.0
10.0																										10.0
11.0	2.7					3.0																				11.0
12.0	2.7					3.0					2.6															12.0
14.0	2.7	2.7				3.0	3.0				2.6	2.6				1.9										14.0
16.0	2.7	2.7	2.7			3.0	3.0	3.0			2.6	2.6				1.9	1.9									16.0
18.0	2.7	2.7	2.7			3.0	3.0	3.0			2.6	2.6	2.6			1.9	1.9	1.9								18.0
20.0	2.7	2.7	2.7	2.7	2.6	3.0	3.0	3.0	2.9	2.6	2.6	2.6	2.6	2.6		1.9	1.9	1.9	1.9							20.0
22.0	2.7	2.7	2.7	2.7	2.5	3.0	3.0	3.0	2.8	2.5	2.6	2.6	2.6	2.6	2.5	1.9	1.9	1.9	1.9	1.9						22.0
24.0	2.7	2.7	2.7	2.7		3.0	3.0	3.0	2.7		2.6	2.6	2.6	2.6	2.5	1.9	1.9	1.9	1.9	1.9						24.0
26.0	2.7	2.7	2.7	2.6		2.6	3.0	3.0	2.7		2.6	2.6	2.6	2.6		1.9	1.9	1.9	1.9							26.0
28.0	2.4	2.7	2.7	2.6		1.8	2.3	2.8	2.6		2.0	2.4	2.6	2.6		1.9	1.9	1.9	1.9							28.0
30.0	1.8	2.1	2.6	2.5		1.2	1.6	2.1	2.4		1.3	1.7	2.2	2.5			1.6	1.9	1.9							30.0
32.0	1.2	1.5	1.9	2.2				1.4	1.7				1.6	1.9				1.5	1.8							32.0
34.0		1.0	1.3	1.6					1.1					1.3												34.0
36.0				1.1																						36.0
38.0																										38.0
40.0																										40.0
42.0																										42.0
44.0																										44.0
46.0																										46.0
48.0																										48.0
50.0																										50.0
52.0																										52.0
54.0																										54.0
56.0																										56.0
58.0																										58.0
60.0																										60.0
64.0																										64.0
1	46	46	46	46	46	92	92	92	92	92	92	92	92	92	92	100	100	100	100	100						1
2	92	92	92	92	92	92	92	92	92	92	92	92	92	92	92	100	100	100	100	100						2
3	92	92	92	92	92	92	92	92	92	92	92	92	92	92	92	100	100	100	100	100						3
4	92	92	92	92	92	92	92	92	92	92	92	92	92	92	92	100	100	100	100	100						4
5	92	92	92	92	92	92	92	92	92	92	92	92	92	92	92	100	100	100	100	100						5
6	92	92	92	92	92	46	46	46	46	46	92	92	92	92	92	100	100	100	100	100						6
ID	28	28	28	28	28	39	39	39	39	39	29	29	29	29	29	19	19	19	19	19						ID
[DEG]	63~84.7	62~84.7	65~84.7	63~84.7	79~84.7	65~84.7	67~84.7	67~84.7	66~84.7	79~84.7	67~84.7	68~84.7	69~84.7	68~84.7	79~84.7	70~84.7	70~84.7	70~84.7	72~84.7	79~84.7						[DEG]
	1	1	1	1	1	1	1	1	1	1	1	1	1	1	1	1	1	1	1	1						
	8.7t	8.7t	8.7t	8.7t	8.7t	8.7t	8.7t	8.7t	8.7t	8.7t	8.7t	8.7t	8.7t	8.7t	8.7t	8.7t	8.7t	8.7t	8.7t	8.7t						

フルオートラフィングジブ

FLJ	1.6m + 17.4m	9.6 t	8.0m x 7.5m	360 °	JPN

m	11.4	11.4	11.4	11.4	11.4	15.1	15.1	15.1	15.1	15.1	15.1	15.1	15.1	15.1	15.1	15.1	15.1	15.1	15.1	15.1	18.8	18.8	18.8	18.8	18.8	m
°	5	15	30	45	60	5	15	30	45	60	5	15	30	45	60	5	15	30	45	60	5	15	30	45	60	°
3.0																										3.0
3.5																										3.5
4.0																										4.0
4.5	3.3																									4.5
5.0	3.3					3.1					3.3					3.3										5.0
6.0	3.3					3.1					3.3					3.3					2.7					6.0
7.0	3.3					3.1					3.3					3.3					2.7					7.0
8.0	3.3	3.3				3.1					3.3					3.3					2.7					8.0
9.0	3.3	3.3				3.1	3.1				3.3	3.3				3.3	3.3				2.7	2.7				9.0
10.0	3.3	3.2				3.1	3.1				3.3	3.3				3.3	3.3				2.7	2.7				10.0
11.0	3.3	3.0				3.1	3.1				3.3	3.1				3.3	3.1				2.7	2.7				11.0
12.0	3.2	2.9	2.5			3.1	2.9				3.3	2.9				3.3	3.0				2.7	2.7				12.0
14.0	2.9	2.6	2.3			3.1	2.7	2.3			3.1	2.7	2.3			3.1	2.7	2.3			2.7	2.7	2.3			14.0
16.0	2.6	2.4	2.1	1.8		2.8	2.5	2.2	1.9		2.8	2.5	2.2	1.9		2.8	2.5	2.2	1.9		2.7	2.5	2.2			16.0
18.0	2.4	2.2	1.9	1.7		2.6	2.3	2.0	1.8		2.6	2.3	2.0	1.8		2.6	2.3	2.0	1.8		2.7	2.4	2.0	1.8		18.0
20.0	2.2	2.0	1.8	1.6		2.4	2.1	1.9	1.7		2.4	2.1	1.9	1.7		2.4	2.1	1.9	1.7		2.5	2.2	1.9	1.7		20.0
22.0	2.0	1.9	1.7			2.2	2.0	1.8	1.6		2.2	2.0	1.8	1.6		2.2	2.0	1.8	1.6		2.3	2.1	1.8	1.6		22.0
24.0	1.8	1.7				2.1	1.9	1.7			2.1	1.9	1.7			2.1	1.9	1.7			2.2	2.0	1.8	1.6		24.0
26.0	1.7	1.6				1.9	1.8	1.6			1.9	1.8	1.6			1.9	1.8	1.6			2.0	1.9	1.7			26.0
28.0						1.8	1.6				1.8	1.6				1.8	1.6				1.9	1.8	1.6			28.0
30.0						1.6					1.6					1.6					1.9	1.7				30.0
32.0																					1.7	1.6				32.0
34.0																					1.6					34.0
36.0																										36.0
38.0																										38.0
40.0																										40.0
42.0																										42.0
44.0																										44.0
46.0																										46.0
48.0																										48.0
50.0																										50.0
52.0																										52.0
54.0																										54.0
56.0																										56.0
58.0																										58.0
60.0																										60.0
64.0																										64.0
1	0	0	0	0		0	0	0	0		0	0	0	0		0	0	0	0		0	0	0	0		1
2	0	0	0	0		0	0	0	0		0	0	0	0		46	46	46	46		0	0	0	0		2
3	0	0	0	0		0	0	0	0		46	46	46	46		0	0	0	0		0	0	0	0		3
4	0	0	0	0		46	46	46	46		0	0	0	0		0	0	0	0		0	0	0	0		4
5	0	0	0	0		0	0	0	0		0	0	0	0		0	0	0	0		46	46	46	46		5
6	0	0	0	0		0	0	0	0		0	0	0	0		0	0	0	0		46	46	46	46		6
ID	1	1	1	1		76	76	76	76		105	105	105	105		131	131	131	131		30	30	30	30		ID
[DEG]	0~84.7	0~84.7	0~84.7	0~84.7		23~84.7	36~84.7	47~84.7	63~84.7		23~84.7	36~84.7	47~84.7	63~84.7		23~84.7	36~84.7	47~84.7	63~84.7		21~84.7	33~84.7	49~84.7	63~84.7		[DEG]
	1	1	1	1		1	1	1	1		1	1	1	1		1	1	1	1		1	1	1	1		
	8.7t	8.7t	8.7t	8.7t		8.7t	8.7t	8.7t	8.7t		8.7t	8.7t	8.7t	8.7t		8.7t	8.7t	8.7t	8.7t		8.7t	8.7t	8.7t	8.7t		

m	18.8	18.8	18.8	18.8	18.8	18.8	18.8	18.8	18.8	18.8	18.8	18.8	18.8	18.8	18.8	22.6	22.6	22.6	22.6	22.6	26.3	26.3	26.3	26.3	26.3	m
°	5	15	30	45	60	5	15	30	45	60	5	15	30	45	60	5	15	30	45	60	5	15	30	45	60	°
3.0																										3.0
3.5																										3.5
4.0																										4.0
4.5																										4.5
5.0																										5.0
6.0	2.9					3.2					3.3					2.5										6.0
7.0	2.9					3.2					3.3					2.5					3.3					7.0
8.0	2.9					3.2					3.3					2.5					3.3					8.0
9.0	2.9	2.9				3.2	3.2				3.3	3.3				2.5					3.3					9.0
10.0	2.9	2.9				3.2	3.2				3.3	3.3				2.5	2.5				3.3	3.3				10.0
11.0	2.9	2.9				3.2	3.2				3.3	3.2				2.5	2.5				3.3	3.3				11.0
12.0	2.9	2.9				3.2	3.0				3.3	3.0				2.5	2.5				3.3	3.2				12.0
14.0	2.9	2.8	2.3			3.2	2.8	2.3			3.2	2.8	2.3			2.5	2.5	2.3			3.3	2.9	2.4			14.0
16.0	2.9	2.5	2.2	1.9		2.9	2.6	2.2	1.9		3.0	2.6	2.2	1.9		2.5	2.5	2.2			3.2	2.7	2.2			16.0
18.0	2.7	2.4	2.1	1.8		2.7	2.4	2.1	1.8		2.7	2.4	2.1	1.8		2.5	2.4	2.1	1.8		3.0	2.5	2.1	1.9		18.0
20.0	2.5	2.2	1.9	1.7		2.5	2.2	1.9	1.7		2.5	2.2	2.0	1.7		2.5	2.3	1.9	1.7		2.8	2.4	2.0	1.8		20.0
22.0	2.3	2.1	1.9	1.6		2.3	2.1	1.9	1.6		2.4	2.1	1.9	1.6		2.4	2.1	1.9	1.7		2.6	2.3	1.9	1.7		22.0
24.0	2.2	2.0	1.8	1.6		2.2	2.0	1.8	1.6		2.2	2.0	1.8	1.6		2.3	2.0	1.8	1.6		2.4	2.1	1.9	1.6		24.0
26.0	2.1	1.9	1.7			2.1	1.9	1.7			2.1	1.9	1.7			2.1	1.9	1.7	1.5		2.3	2.0	1.8	1.6		26.0
28.0	1.9	1.8	1.6			2.0	1.8	1.6			2.0	1.8	1.6			2.0	1.8	1.7			2.2	1.9	1.7	1.5		28.0
30.0	1.9	1.7				1.9	1.7				1.9	1.7				1.9	1.8	1.6			1.7	1.9	1.7			30.0
32.0	1.7	1.6				1.7	1.6				1.7	1.6				1.8	1.7				1.2	1.5	1.6			32.0
34.0	1.6					1.6					1.6					1.8	1.6					1.0	1.3			34.0
36.0																1.7										36.0
38.0																										38.0
40.0																										40.0
42.0																										42.0
44.0																										44.0
46.0																										46.0
48.0																										48.0
50.0																										50.0
52.0																										52.0
54.0																										54.0
56.0																										56.0
58.0																										58.0
60.0																										60.0
64.0																										64.0
1	0	0	0	0		0	0	0	0		0	0	0	0		0	0	0	0		92	92	92	92		1
2	0	0	0	0		0	0	0	0		46	46	46	46		0	0	0	0		92	92	92	92		2
3	0	0	0	0		46	46	46	46		46	46	46	46		0	0	0	0		0	0	0	0		3
4	46	46	46	46		46	46	46	46		0	0	0	0		0	0	0	0		0	0	0	0		4
5	46	46	46	46		0	0	0	0		0	0	0	0		46	46	46	46		0	0	0	0		5
6	0	0	0	0		0	0	0	0		0	0	0	0		92	92	92	92		0	0	0	0		6
ID	58	58	58	58		88	88	88	88		113	113	113	113		20	20	20	20		134	134	134	134		ID
[DEG]	21~84.7	32~84.7	49~84.7	63~84.7		21~84.7	32~84.7	49~84.7	63~84.7		20~84.7	32~84.7	49~84.7	63~84.7		28~84.7	37~84.7	51~84.7	63~84.7		45~84.7	44~84.7	47~84.7	62~84.7		[DEG]
	1	1	1	1		1	1	1	1		1	1	1	1		1	1	1	1		1	1	1	1		
	8.7t	8.7t	8.7t	8.7t		8.7t	8.7t	8.7t	8.7t		8.7t	8.7t	8.7t	8.7t		8.7t	8.7t	8.7t	8.7t		8.7t	8.7t	8.7t	8.7t		

FLJ	1.6m + 17.4m	9.6 t	8.0m x 7.5m	360 °	JPN

m	30.0	30.0	30.0	30.0	30.0	30.0	30.0	30.0	30.0	30.0	33.7	33.7	33.7	33.7	33.7	37.4	37.4	37.4	37.4	37.4	37.4	37.4	37.4	37.4	37.4	m
°	5	15	30	45	60	5	15	30	45	60	5	15	30	45	60	5	15	30	45	60	5	15	30	45	60	°
3.0																										3.0
3.5																										3.5
4.0																										4.0
4.5																										4.5
5.0																										5.0
6.0																										6.0
7.0																										7.0
8.0	2.3					3.2					3.1															8.0
9.0	2.3					3.2					3.1					2.4					2.5					9.0
10.0	2.3					3.2					3.1					2.4					2.5					10.0
11.0	2.3	2.3				3.2	3.2				3.1					2.4					2.5					11.0
12.0	2.3	2.3				3.2	3.2				3.1	3.1				2.4	2.4				2.5					12.0
14.0	2.3	2.3				3.2	2.9				3.1	3.0				2.4	2.4				2.5	2.5				14.0
16.0	2.3	2.3	2.2			3.2	2.8	2.3			3.1	2.8	2.3			2.4	2.4	2.2			2.5	2.5				16.0
18.0	2.3	2.3	2.1			3.1	2.6	2.2	1.9		3.1	2.6	2.2			2.4	2.4	2.2			2.5	2.5	2.1			18.0
20.0	2.3	2.3	2.0	1.8		2.9	2.4	2.1	1.8	1.5	2.9	2.5	2.1	1.8		2.4	2.4	2.1	1.8		2.5	2.4	2.0	1.8		20.0
22.0	2.3	2.2	1.9	1.7		2.7	2.3	2.0	1.7	1.5	2.7	2.3	2.0	1.8		2.4	2.4	2.0	1.8	1.5	2.5	2.2	1.9	1.7	1.5	22.0
24.0	2.3	2.1	1.8	1.7		2.5	2.2	1.9	1.7		2.6	2.2	1.9	1.7		2.4	2.2	1.9	1.7	1.5	2.5	2.1	1.8	1.7	1.5	24.0
26.0	2.3	2.0	1.8	1.6		2.4	2.1	1.8	1.6		2.4	2.1	1.8	1.6		2.4	2.2	1.8	1.7		2.4	2.1	1.8	1.6		26.0
28.0	2.2	1.9	1.7	1.6		2.3	2.0	1.8	1.6		2.1	2.0	1.8	1.6		2.1	2.1	1.8	1.6		2.2	2.0	1.7	1.6		28.0
30.0	2.1	1.8	1.6	1.5		1.6	1.9	1.7	1.5		1.5	1.9	1.7	1.5		1.5	2.0	1.7	1.6		2.1	1.9	1.7	1.5		30.0
32.0	2.0	1.8	1.6			1.0	1.4	1.6			0.9	1.3	1.7	1.5		0.9	1.4	1.7	1.5		2.1	1.8	1.6	1.5		32.0
34.0	1.9	1.7	1.6				0.9	1.3					1.3					1.3	1.5		2.0	1.8	1.6	1.5		34.0
36.0		1.7	1.5																		1.9	1.7	1.5			36.0
38.0		1.6																			1.6	1.7	1.5			38.0
40.0		1.6																			1.2	1.4	1.5			40.0
42.0		1.4																			0.9	1.1	1.3			42.0
44.0																										44.0
46.0																										46.0
48.0																										48.0
50.0																										50.0
52.0																										52.0
54.0																										54.0
56.0																										56.0
58.0																										58.0
60.0																										60.0
64.0																										64.0
1	0	0	0	0		92	92	92	92	92	92	92	92	92		92	92	92	92	92	0	0	0	0	0	1
2	0	0	0	0		92	92	92	92	92	92	92	92	92		92	92	92	92	92	0	0	0	0	0	2
3	0	0	0	0		46	46	46	46	46	92	92	92	92		92	92	92	92	92	46	46	46	46	46	3
4	46	46	46	46		0	0	0	0	0	0	0	0	0		46	46	46	46	46	92	92	92	92	92	4
5	92	92	92	92		0	0	0	0	0	0	0	0	0		0	0	0	0	0	92	92	92	92	92	5
6	92	92	92	92		0	0	0	0	0	0	0	0	0		0	0	0	0	0	92	92	92	92	92	6
ID	22	22	22	22		116	116	116	116	116	110	110	110	110		93	93	93	93	93	24	24	24	24	24	ID
[DEG]	48~84.7	33~84.7	49~84.7	63~84.7		49~84.7	49~84.7	53~84.7	62~84.7	77~84.7	53~84.7	56~84.7	57~84.7	62~84.7		56~84.7	60~84.7	60~84.7	62~84.7	77~84.7	43~84.7	46~84.7	48~84.7	63~84.7	78~84.7	[DEG]
	1	1	1	1		1	1	1	1	1	1	1	1	1		1	1	1	1	1	1	1	1	1	1	
	8.7t	8.7t	8.7t	8.7t		8.7t	8.7t	8.7t	8.7t	8.7t	8.7t	8.7t	8.7t	8.7t		8.7t	8.7t	8.7t	8.7t	8.7t	8.7t	8.7t	8.7t	8.7t	8.7t	

m	41.2	41.2	41.2	41.2	41.2	44.9	44.9	44.9	44.9	44.9	44.9	44.9	44.9	44.9	44.9	48.6	48.6	48.6	48.6	48.6	48.6	48.6	48.6	48.6	48.6	m
°	5	15	30	45	60	5	15	30	45	60	5	15	30	45	60	5	15	30	45	60	5	15	30	45	60	°
3.0																										3.0
3.5																										3.5
4.0																										4.0
4.5																										4.5
5.0																										5.0
6.0																										6.0
7.0																										7.0
8.0																										8.0
9.0																										9.0
10.0	2.7										2.4															10.0
11.0	2.7					1.9					2.4					2.0					2.2					11.0
12.0	2.7					1.9					2.4					2.0					2.2					12.0
14.0	2.7	2.7				1.9	1.9				2.4	2.4				2.0	2.0				2.2	2.2				14.0
16.0	2.7	2.7				1.9	1.9				2.4	2.4				2.0	2.0				2.2	2.2				16.0
18.0	2.7	2.6	2.1			1.9	1.9	1.9			2.4	2.4	2.1			2.0	2.0				2.2	2.2				18.0
20.0	2.7	2.5	2.1	1.8		1.9	1.9	1.9			2.4	2.4	2.0			2.0	2.0	2.0			2.2	2.2	2.0			20.0
22.0	2.7	2.4	2.0	1.8	1.5	1.9	1.9	1.9	1.7		2.4	2.4	2.0	1.7		2.0	2.0	1.9	1.7		2.2	2.2	1.9	1.7		22.0
24.0	2.6	2.3	1.9	1.7	1.5	1.9	1.9	1.8	1.7	1.5	2.4	2.2	1.9	1.7	1.5	2.0	2.0	1.9	1.7	1.5	2.2	2.2	1.9	1.7	1.5	24.0
26.0	2.5	2.2	1.8	1.7		1.9	1.9	1.8	1.6	1.5	2.4	2.2	1.8	1.7	1.5	2.0	2.0	1.8	1.6	1.5	2.2	2.1	1.8	1.6	1.5	26.0
28.0	2.1	2.1	1.8	1.6		1.9	1.9	1.7	1.6		2.2	2.1	1.8	1.6		2.0	2.0	1.7	1.6		2.2	2.1	1.8	1.6		28.0
30.0	1.5	2.0	1.7	1.6		1.9	1.9	1.7	1.5		1.6	2.0	1.7	1.6		2.0	2.0	1.7	1.6		1.6	2.0	1.7	1.6		30.0
32.0	0.9	1.4	1.7	1.6		1.9	1.9	1.6	1.5		1.0	1.5	1.7	1.5		1.6	1.9	1.6	1.5		1.1	1.5	1.7	1.5		32.0
34.0			1.4	1.5		1.9	1.8	1.6	1.5			0.9	1.5	1.5		1.1	1.5	1.6	1.5			1.0	1.6	1.5		34.0
36.0				1.2		1.4	1.7	1.5	1.5				0.9	1.3			1.0	1.5	1.5				1.0	1.4		36.0
38.0						1.0	1.3	1.5										1.0	1.4					0.9		38.0
40.0							0.9	1.3																		40.0
42.0								0.9																		42.0
44.0																										44.0
46.0																										46.0
48.0																										48.0
50.0																										50.0
52.0																										52.0
54.0																										54.0
56.0																										56.0
58.0																										58.0
60.0																										60.0
64.0																										64.0
1	92	92	92	92	92	0	0	0	0	0	92	92	92	92	92	46	46	46	46	46	92	92	92	92	92	1
2	92	92	92	92	92	46	46	46	46	46	92	92	92	92	92	92	92	92	92	92	92	92	92	92	92	2
3	92	92	92	92	92	92	92	92	92	92	92	92	92	92	92	92	92	92	92	92	92	92	92	92	92	3
4	92	92	92	92	92	92	92	92	92	92	92	92	92	92	92	92	92	92	92	92	92	92	92	92	92	4
5	0	0	0	0	0	92	92	92	92	92	46	46	46	46	46	92	92	92	92	92	92	92	92	92	92	5
6	0	0	0	0	0	92	92	92	92	92	0	0	0	0	0	46	46	46	46	46	0	0	0	0	0	6
ID	83	83	83	83	83	26	26	26	26	26	65	65	65	65	65	38	38	38	38	38	49	49	49	49	49	ID
[DEG]	59~84.7	62~84.7	63~84.7	62~84.7	79~84.7	56~84.7	56~84.7	56~84.7	65~84.7	78~84.7	62~84.7	62~84.7	63~84.7	65~84.7	78~84.7	62~84.7	62~84.7	63~84.7	65~84.7	79~84.7	64~84.7	64~84.7	65~84.7	65~84.7	79~84.7	[DEG]
	1	1	1	1	1	1	1	1	1	1	1	1	1	1	1	1	1	1	1	1	1	1	1	1	1	
	8.7t	8.7t	8.7t	8.7t	8.7t	8.7t	8.7t	8.7t	8.7t	8.7t	8.7t	8.7t	8.7t	8.7t	8.7t	8.7t	8.7t	8.7t	8.7t	8.7t	8.7t	8.7t	8.7t	8.7t	8.7t	

フルオートラフィングジブ

FLJ	1.6m + 17.4m	9.6 t	8.0m x 7.5m	360 °	JPN

m	52.3	52.3	52.3	52.3	52.3	52.3	52.3	52.3	52.3	52.3	56.0	56.0	56.0	56.0	56.0	60.0	60.0	60.0	60.0	60.0						m
°	5	15	30	45	60	5	15	30	45	60	5	15	30	45	60	5	15	30	45	60						°
3.0																										3.0
3.5																										3.5
4.0																										4.0
4.5																										4.5
5.0																										5.0
6.0																										6.0
7.0																										7.0
8.0																										8.0
9.0																										9.0
10.0																										10.0
11.0																										11.0
12.0						2.0																				12.0
14.0	1.8					2.0					1.8															14.0
16.0	1.8	1.8				2.0	2.0				1.8	1.8				1.0										16.0
18.0	1.8	1.8				2.0	2.0				1.8	1.8				1.0	1.0									18.0
20.0	1.8	1.8	1.8			2.0	2.0	2.0			1.8	1.8				1.0	1.0									20.0
22.0	1.8	1.8	1.8			2.0	2.0	1.9			1.8	1.8	1.8			1.0	1.0	1.0								22.0
24.0	1.8	1.8	1.8	1.6		2.0	2.0	1.9	1.7		1.8	1.8	1.8	1.6		1.0	1.0	1.0								24.0
26.0	1.8	1.8	1.8	1.6	1.5	2.0	2.0	1.8	1.6	1.5	1.8	1.8	1.8	1.6	1.5	1.0	1.0	1.0	1.0							26.0
28.0	1.8	1.8	1.7	1.6	1.4	2.0	2.0	1.7	1.6	1.4	1.8	1.8	1.7	1.6	1.4	1.0	1.0	1.0	1.0	1.0						28.0
30.0	1.8	1.8	1.7	1.5		1.8	2.0	1.7	1.5		1.8	1.8	1.7	1.5		1.0	1.0	1.0	1.0	1.0						30.0
32.0	1.7	1.8	1.6	1.5		1.2	1.7	1.6	1.5		1.3	1.8	1.6	1.5			1.0	1.0	1.0							32.0
34.0	1.2	1.6	1.6	1.5			1.1	1.6	1.5			1.2	1.6	1.5				1.0	1.0							34.0
36.0		1.1	1.5	1.4				1.2	1.5				1.3	1.4					1.0							36.0
38.0			1.2	1.4					1.0					1.2												38.0
40.0				1.0																						40.0
42.0																										42.0
44.0																										44.0
46.0																										46.0
48.0																										48.0
50.0																										50.0
52.0																										52.0
54.0																										54.0
56.0																										56.0
58.0																										58.0
60.0																										60.0
64.0																										64.0
1	46	46	46	46	46	92	92	92	92	92	92	92	92	92	92	100	100	100	100	100						1
2	92	92	92	92	92	92	92	92	92	92	92	92	92	92	92	100	100	100	100	100						2
3	92	92	92	92	92	92	92	92	92	92	92	92	92	92	92	100	100	100	100	100						3
4	92	92	92	92	92	92	92	92	92	92	92	92	92	92	92	100	100	100	100	100						4
5	92	92	92	92	92	92	92	92	92	92	92	92	92	92	92	100	100	100	100	100						5
6	92	92	92	92	92	46	46	46	46	46	92	92	92	92	92	100	100	100	100	100						6
ID	28	28	28	28	28	39	39	39	39	39	29	29	29	29	29	19	19	19	19	19						ID
[DEG]	64~84.7	64~84.7	65~84.7	65~84.7	78~84.7	66~84.7	66~84.7	67~84.7	67~84.7	78~84.7	68~84.7	68~84.7	69~84.7	69~84.7	79~84.7	71~84.7	71~84.7	72~84.7	72~84.7	78~84.7						[DEG]
	1	1	1	1	1	1	1	1	1	1	1	1	1	1	1	1	1	1	1	1						
	8.7t	8.7t	8.7t	8.7t	8.7t	8.7t	8.7t	8.7t	8.7t	8.7t	8.7t	8.7t	8.7t	8.7t	8.7t	8.7t	8.7t	8.7t	8.7t	8.7t						

FLJ	1.6m + 7.4m	9.6 t	8.0m x 6.2m	360 °	JPN

m	11.4	11.4	11.4	11.4	11.4	15.1	15.1	15.1	15.1	15.1	15.1	15.1	15.1	15.1	15.1	15.1	15.1	15.1	15.1	15.1	18.8	18.8	18.8	18.8	18.8	m
°	5	15	30	45	60	5	15	30	45	60	5	15	30	45	60	5	15	30	45	60	5	15	30	45	60	°
3.0	7.3					7.3					7.3					7.3					7.3					3.0
3.5	7.3					7.3					7.3					7.3					7.3					3.5
4.0	7.3	7.3				7.3	7.3				7.3	7.3				7.3	7.3				7.3					4.0
4.5	7.3	7.3				7.3	7.3				7.3	7.3				7.3	7.3				7.3					4.5
5.0	7.3	7.3	7.3			7.3	7.3				7.3	7.3				7.3	7.3				7.3	7.3				5.0
6.0	7.3	7.3	7.3			7.3	7.3	7.3			7.3	7.3	7.3			7.3	7.3	7.3			7.3	7.3	7.3			6.0
7.0	7.3	7.3	7.3	6.5	5.0	7.3	7.3	7.3	6.7		7.3	7.3	7.3	6.7		7.3	7.3	7.3	6.7		7.3	7.3	7.3			7.0
8.0	7.3	7.3	7.3	6.3	4.9	7.3	7.3	7.3	6.5	5.0	7.3	7.3	7.3	6.5	5.0	7.3	7.3	7.3	6.5	5.0	7.3	7.3	7.3	6.6	5.0	8.0
9.0	7.3	7.3	7.2	6.0		7.3	7.3	7.3	6.3	4.9	7.3	7.3	7.3	6.3	4.9	7.3	7.3	7.3	6.3	4.9	7.3	7.3	7.3	6.4	4.9	9.0
10.0	7.3	7.3	6.9	5.9		7.3	7.3	7.3	6.1		7.3	7.3	7.3	6.1		7.3	7.3	7.3	6.1		7.3	7.3	7.3	6.3	4.9	10.0
11.0	7.3	7.3	6.6	5.7		7.3	7.3	7.0	5.9		7.3	7.3	7.0	5.9		7.3	7.3	7.0	5.9		7.3	7.3	7.3	6.1		11.0
12.0	7.3	7.0	6.3			7.3	7.3	6.8	5.8		7.3	7.3	6.8	5.8		7.3	7.3	6.8	5.8		7.3	7.3	7.2	6.0		12.0
14.0	6.4	6.2	5.9			7.3	7.1	6.3			7.3	7.1	6.3			7.3	7.1	6.3			7.3	7.3	6.7	5.7		14.0
16.0	5.7	5.7				6.8	6.4	5.9			6.8	6.4	5.9			6.8	6.4	5.9			7.3	7.1	6.3			16.0
18.0						6.0	5.9				6.0	5.9				6.0	5.9				7.0	6.6	6.0			18.0
20.0						5.2					5.0					4.7					5.6	5.8				20.0
22.0																					4.5	4.6				22.0
24.0																					3.7					24.0
26.0																										26.0
28.0																										28.0
30.0																										30.0
32.0																										32.0
34.0																										34.0
36.0																										36.0
38.0																										38.0
40.0																										40.0
42.0																										42.0
44.0																										44.0
46.0																										46.0
48.0																										48.0
50.0																										50.0
52.0																										52.0
54.0																										54.0
56.0																										56.0
58.0																										58.0
60.0																										60.0
64.0																										64.0
1	0	0	0	0	0	0	0	0	0	0	0	0	0	0	0	0	0	0	0	0	0	0	0	0	0	1
2	0	0	0	0	0	0	0	0	0	0	0	0	0	0	0	46	46	46	46	46	0	0	0	0	0	2
3	0	0	0	0	0	0	0	0	0	0	46	46	46	46	46	0	0	0	0	0	0	0	0	0	0	3
4	0	0	0	0	0	46	46	46	46	46	0	0	0	0	0	0	0	0	0	0	0	0	0	0	0	4
5	0	0	0	0	0	0	0	0	0	0	0	0	0	0	0	0	0	0	0	0	46	46	46	46	46	5
6	0	0	0	0	0	0	0	0	0	0	0	0	0	0	0	0	0	0	0	0	46	46	46	46	46	6
ID	1	1	1	1	1	76	76	76	76	76	105	105	105	105	105	131	131	131	131	131	30	30	30	30	30	ID
[DEG]	0~84.7	0~84.7	0~84.7	0~84.7	0~84.7	24~84.7	37~84.7	48~84.7	64~84.7	75~84.7	24~84.7	37~84.7	48~84.7	64~84.7	75~84.7	24~84.7	37~84.7	48~84.7	64~84.7	75~84.7	21~84.7	33~84.7	50~84.7	63~84.7	75~84.7	[DEG]
	1	1	1	1	1	1	1	1	1	1	1	1	1	1	1	1	1	1	1	1	1	1	1	1	1	
	8.7t	8.7t	8.7t	8.7t	8.7t	8.7t	8.7t	8.7t	8.7t	8.7t	8.7t	8.7t	8.7t	8.7t	8.7t	8.7t	8.7t	8.7t	8.7t	8.7t	8.7t	8.7t	8.7t	8.7t	8.7t	

FLJ	1.6m + 7.4m	9.6 t	8.0m x 6.2m	360 °	JPN

m	18.8	18.8	18.8	18.8	18.8	18.8	18.8	18.8	18.8	18.8	18.8	18.8	18.8	18.8	18.8	22.6	22.6	22.6	22.6	22.6	26.3	26.3	26.3	26.3	26.3	m
°	5	15	30	45	60	5	15	30	45	60	5	15	30	45	60	5	15	30	45	60	5	15	30	45	60	°
3.0	7.3					7.3					7.3															3.0
3.5	7.3					7.3					7.3															3.5
4.0	7.3					7.3	7.3				7.3	7.3				7.3										4.0
4.5	7.3					7.3	7.3				7.3	7.3				7.3										4.5
5.0	7.3	7.3				7.3	7.3				7.3	7.3				7.3	7.3				7.3					5.0
6.0	7.3	7.3	7.3			7.3	7.3	7.3			7.3	7.3	7.3			7.3	7.3				7.3	7.3				6.0
7.0	7.3	7.3	7.3	6.9		7.3	7.3	7.3	6.9		7.3	7.3	7.3	6.9		7.3	7.3	7.3			7.3	7.3				7.0
8.0	7.3	7.3	7.3	6.6	5.0	7.3	7.3	7.3	6.6	5.0	7.3	7.3	7.3	6.6	5.0	7.3	7.3	7.3	6.8		7.3	7.3	7.3			8.0
9.0	7.3	7.3	7.3	6.4	4.9	7.3	7.3	7.3	6.4	4.9	7.3	7.3	7.3	6.4	4.9	7.3	7.3	7.3	6.6	5.0	7.3	7.3	7.3	6.7	5.0	9.0
10.0	7.3	7.3	7.3	6.3	4.9	7.3	7.3	7.3	6.3	4.9	7.3	7.3	7.3	6.3	4.9	7.3	7.3	7.3	6.4	4.9	7.3	7.3	7.3	6.5	4.9	10.0
11.0	7.3	7.3	7.3	6.1		7.3	7.3	7.3	6.1		7.3	7.3	7.3	6.1		7.3	7.3	7.3	6.3	4.8	7.3	7.3	7.3	6.4	4.9	11.0
12.0	7.3	7.3	7.2	6.0		7.3	7.3	7.2	6.0		7.3	7.3	7.2	6.0		7.3	7.3	7.3	6.1		7.3	7.3	7.3	6.3	4.8	12.0
14.0	7.3	7.3	6.7	5.7		7.3	7.3	6.7	5.7		7.3	7.3	6.7	5.7		7.2	6.9	6.5	5.9		7.3	7.3	7.3	6.0		14.0
16.0	7.3	7.1	6.3			7.3	7.1	6.3			7.3	7.1	6.3			6.4	6.1	5.9	5.7		6.0	6.5	7.0	5.8		16.0
18.0	6.6	6.6	6.0			6.2	6.5	6.0			5.8	6.0	6.0			5.7	5.5	5.3			4.3	4.7	5.2	5.5		18.0
20.0	5.3	5.4				4.9	5.1				4.5	4.7				5.1	5.0	4.9			3.1	3.4	3.7			20.0
22.0	4.2	4.3				3.9	4.0				3.5	3.6				4.6	4.5	4.5			2.1	2.3	2.6			22.0
24.0	3.4					3.0					2.6					3.8	3.9				1.2	1.4	1.7			24.0
26.0																3.1	3.2									26.0
28.0																										28.0
30.0																										30.0
32.0																										32.0
34.0																										34.0
36.0																										36.0
38.0																										38.0
40.0																										40.0
42.0																										42.0
44.0																										44.0
46.0																										46.0
48.0																										48.0
50.0																										50.0
52.0																										52.0
54.0																										54.0
56.0																										56.0
58.0																										58.0
60.0																										60.0
64.0																										64.0
1	0	0	0	0	0	0	0	0	0	0	0	0	0	0	0	0	0	0	0	0	92	92	92	92	92	1
2	0	0	0	0	0	0	0	0	0	0	46	46	46	46	46	0	0	0	0	0	92	92	92	92	92	2
3	0	0	0	0	0	46	46	46	46	46	46	46	46	46	46	0	0	0	0	0	0	0	0	0	0	3
4	46	46	46	46	46	46	46	46	46	46	0	0	0	0	0	0	0	0	0	0	0	0	0	0	0	4
5	46	46	46	46	46	0	0	0	0	0	0	0	0	0	0	46	46	46	46	46	0	0	0	0	0	5
6	0	0	0	0	0	0	0	0	0	0	0	0	0	0	0	92	92	92	92	92	0	0	0	0	0	6
ID	58	58	58	58	58	88	88	88	88	88	113	113	113	113	113	20	20	20	20	20	134	134	134	134	134	ID
[DEG]	21~84.7	33~84.7	50~84.7	63~84.7	75~84.7	21~84.7	33~84.7	50~84.7	63~84.7	75~84.7	20~84.7	33~84.7	50~84.7	63~84.7	75~84.7	29~84.7	30~84.7	46~84.7	63~84.7	76~84.7	44~84.7	45~84.7	47~84.7	63~84.7	76~84.7	[DEG]
	1	1	1	1	1	1	1	1	1	1	1	1	1	1	1	1	1	1	1	1	1	1	1	1	1	
	8.7t	8.7t	8.7t	8.7t	8.7t	8.7t	8.7t	8.7t	8.7t	8.7t	8.7t	8.7t	8.7t	8.7t	8.7t	8.7t	8.7t	8.7t	8.7t	8.7t	8.7t	8.7t	8.7t	8.7t	8.7t	

m	30.0	30.0	30.0	30.0	30.0	30.0	30.0	30.0	30.0	30.0	33.7	33.7	33.7	33.7	33.7	37.4	37.4	37.4	37.4	37.4	37.4	37.4	37.4	37.4	37.4	m
°	5	15	30	45	60	5	15	30	45	60	5	15	30	45	60	5	15	30	45	60	5	15	30	45	60	°
3.0																										3.0
3.5																										3.5
4.0																										4.0
4.5																										4.5
5.0	7.3					7.3																				5.0
6.0	7.3	7.3				7.3	7.3				7.3															6.0
7.0	7.3	7.3				7.3	7.3				7.3	7.3				7.1					7.3					7.0
8.0	7.3	7.3	7.3			7.3	7.3	7.3			7.3	7.3				7.1	7.1				7.3	7.3				8.0
9.0	7.3	7.3	7.3			7.3	7.3	7.3	6.8		7.3	7.3	7.3			7.1	7.1				7.3	7.3				9.0
10.0	7.3	7.3	7.3	6.6	5.0	7.3	7.3	7.3	6.6	5.0	7.3	7.3	7.3	6.7		7.1	7.1	7.1			7.3	7.3	7.3			10.0
11.0	7.3	7.3	7.3	6.5	4.9	7.3	7.3	7.3	6.5	4.9	7.3	7.3	7.3	6.6	4.9	7.1	7.1	7.1	6.7	5.0	7.3	7.3	7.2	6.7		11.0
12.0	7.3	7.3	7.1	6.4	4.9	7.3	7.3	7.3	6.4	4.9	7.3	7.3	7.3	6.5	4.9	7.1	7.1	7.1	6.6	4.9	7.3	7.3	6.9	6.4	4.9	12.0
14.0	6.8	6.6	6.3	6.1		7.3	7.3	7.3	6.1		7.3	7.3	7.3	6.2	4.8	7.1	7.1	7.1	6.3	4.8	6.9	6.6	6.2	5.9	4.8	14.0
16.0	6.0	5.8	5.6	5.5		6.0	6.5	7.1	5.9		6.0	6.5	7.1	6.0		6.1	6.6	7.1	6.1		6.1	5.9	5.7	5.5		16.0
18.0	5.3	5.2	5.1	5.0		4.3	4.7	5.2	5.6		4.3	4.7	5.3	5.6		4.5	4.9	5.4	5.8		5.5	5.4	5.2	5.0		18.0
20.0	4.8	4.7	4.6	4.5		3.1	3.4	3.8	4.1		3.1	3.4	3.8	4.1		3.2	3.5	4.0	4.3		5.0	4.9	4.7	4.6		20.0
22.0	4.3	4.3	4.2			2.1	2.3	2.6			2.0	2.3	2.7	2.9		2.2	2.5	2.8	3.1		4.3	4.5	4.3	4.3		22.0
24.0	3.7	3.9	3.8			1.2	1.5	1.7				1.5	1.8					1.9	2.1		3.4	3.6	3.8	4.0		24.0
26.0	3.0	3.2	3.3																		2.7	2.9	3.1			26.0
28.0	2.4	2.5																			2.2	2.3	2.4			28.0
30.0	1.9	2.0																			1.6	1.8	1.9			30.0
32.0	1.5	1.6																			1.2	1.3	1.4			32.0
34.0	1.1																					0.9				34.0
36.0																										36.0
38.0																										38.0
40.0																										40.0
42.0																										42.0
44.0																										44.0
46.0																										46.0
48.0																										48.0
50.0																										50.0
52.0																										52.0
54.0																										54.0
56.0																										56.0
58.0																										58.0
60.0																										60.0
64.0																										64.0
1	0	0	0	0	0	92	92	92	92	92	92	92	92	92	92	92	92	92	92	92	0	0	0	0	0	1
2	0	0	0	0	0	92	92	92	92	92	92	92	92	92	92	92	92	92	92	92	0	0	0	0	0	2
3	0	0	0	0	0	46	46	46	46	46	92	92	92	92	92	92	92	92	92	92	46	46	46	46	46	3
4	46	46	46	46	46	0	0	0	0	0	0	0	0	0	0	46	46	46	46	46	92	92	92	92	92	4
5	92	92	92	92	92	0	0	0	0	0	0	0	0	0	0	0	0	0	0	0	92	92	92	92	92	5
6	92	92	92	92	92	0	0	0	0	0	0	0	0	0	0	0	0	0	0	0	92	92	92	92	92	6
ID	22	22	22	22	22	116	116	116	116	116	110	110	110	110	110	93	93	93	93	93	24	24	24	24	24	ID
[DEG]	24~84.7	32~84.7	50~84.7	63~84.7	78~84.7	50~84.7	51~84.7	53~84.7	62~84.7	78~84.7	58~84.7	56~84.7	57~84.7	62~84.7	76~84.7	61~84.7	62~84.7	61~84.7	62~84.7	78~84.7	45~84.7	42~84.7	48~84.7	63~84.7	78~84.7	[DEG]
	1	1	1	1	1	1	1	1	1	1	1	1	1	1	1	1	1	1	1	1	1	1	1	1	1	
	8.7t	8.7t	8.7t	8.7t	8.7t	8.7t	8.7t	8.7t	8.7t	8.7t	8.7t	8.7t	8.7t	8.7t	8.7t	8.7t	8.7t	8.7t	8.7t	8.7t	8.7t	8.7t	8.7t	8.7t	8.7t	

フルオートラフィングジブ

FLJ	1.6m + 7.4m	9.6 t	8.0m x 6.2m	360 °	JPN

m	41.2	41.2	41.2	41.2	41.2	44.9	44.9	44.9	44.9	44.9	44.9	44.9	44.9	44.9	44.9	48.6	48.6	48.6	48.6	48.6	48.6	48.6	48.6	48.6	48.6	m
°	5	15	30	45	60	5	15	30	45	60	5	15	30	45	60	5	15	30	45	60	5	15	30	45	60	°
3.0																										3.0
3.5																										3.5
4.0																										4.0
4.5																										4.5
5.0																										5.0
6.0																										6.0
7.0	7.3																									7.0
8.0	7.3										6.5															8.0
9.0	7.3	7.3				4.6					6.5					4.8					5.4					9.0
10.0	7.3	7.3	7.3			4.6	4.6				6.5	6.5				4.8					5.4					10.0
11.0	7.3	7.3	7.3			4.6	4.6				6.5	6.5	6.5			4.8	4.8				5.4	5.4				11.0
12.0	7.3	7.3	7.3	6.6	4.9	4.6	4.6	4.6			6.5	6.5	6.5			4.8	4.8	4.8			5.4	5.4	5.4			12.0
14.0	7.3	7.3	7.3	6.4	4.9	4.6	4.6	4.6	4.6	4.6	6.5	6.5	6.5	6.5	4.9	4.8	4.8	4.8	4.8	4.8	5.4	5.4	5.4	5.4	4.9	14.0
16.0	6.3	6.7	7.3	6.2		4.6	4.6	4.6	4.6	4.6	6.4	6.5	6.5	6.3	4.8	4.8	4.8	4.8	4.8	4.8	5.4	5.4	5.4	5.4	4.8	16.0
18.0	4.6	5.0	5.5	5.9		4.6	4.6	4.6	4.6		4.7	5.1	5.7	6.1		4.8	4.8	4.8	4.8		4.9	5.3	5.4	5.4		18.0
20.0	3.3	3.6	4.1	4.4		4.6	4.6	4.6	4.6		3.5	3.8	4.2	4.6		4.2	4.5	4.8	4.8		3.6	3.9	4.4	4.7		20.0
22.0	2.3	2.6	2.9	3.2		3.9	4.1	4.3	4.2		2.4	2.7	3.1	3.4		3.1	3.4	3.8	4.0		2.6	2.9	3.3	3.6		22.0
24.0			2.0	2.3		3.0	3.2	3.5	3.7				2.2	2.4		2.3	2.6	2.9	3.1				2.4	2.6		24.0
26.0						2.3	2.5	2.7	2.9								1.8	2.1	2.3							26.0
28.0						1.7	1.9	2.1	2.2																	28.0
30.0						1.2	1.4	1.5																		30.0
32.0								1.1																		32.0
34.0																										34.0
36.0																										36.0
38.0																										38.0
40.0																										40.0
42.0																										42.0
44.0																										44.0
46.0																										46.0
48.0																										48.0
50.0																										50.0
52.0																										52.0
54.0																										54.0
56.0																										56.0
58.0																										58.0
60.0																										60.0
64.0																										64.0
1	92	92	92	92	92	0	0	0	0	0	92	92	92	92	92	46	46	46	46	46	92	92	92	92	92	1
2	92	92	92	92	92	46	46	46	46	46	92	92	92	92	92	92	92	92	92	92	92	92	92	92	92	2
3	92	92	92	92	92	92	92	92	92	92	92	92	92	92	92	92	92	92	92	92	92	92	92	92	92	3
4	92	92	92	92	92	92	92	92	92	92	92	92	92	92	92	92	92	92	92	92	92	92	92	92	92	4
5	0	0	0	0	0	92	92	92	92	92	46	46	46	46	46	92	92	92	92	92	92	92	92	92	92	5
6	0	0	0	0	0	92	92	92	92	92	0	0	0	0	0	46	46	46	46	46	0	0	0	0	0	6
ID	83	83	83	83	83	26	26	26	26	26	65	65	65	65	65	38	38	38	38	38	49	49	49	49	49	ID
[DEG]	64~84.7	65~84.7	64~84.7	65~84.7	79~84.7	56~84.7	57~84.7	56~84.7	62~84.7	78~84.7	66~84.7	67~84.7	66~84.7	67~84.7	78~84.7	66~84.7	65~84.7	66~84.7	67~84.7	79~84.7	68~84.7	69~84.7	69~84.7	70~84.7	79~84.7	[DEG]
	1	1	1	1	1	1	1	1	1	1	1	1	1	1	1	1	1	1	1	1	1	1	1	1	1	
	8.7t	8.7t	8.7t	8.7t	8.7t	8.7t	8.7t	8.7t	8.7t	8.7t	8.7t	8.7t	8.7t	8.7t	8.7t	8.7t	8.7t	8.7t	8.7t	8.7t	8.7t	8.7t	8.7t	8.7t	8.7t	

m	52.3	52.3	52.3	52.3	52.3	52.3	52.3	52.3	52.3	52.3	56.0	56.0	56.0	56.0	56.0	60.0	60.0	60.0	60.0	60.0						m
°	5	15	30	45	60	5	15	30	45	60	5	15	30	45	60	5	15	30	45	60						°
3.0																										3.0
3.5																										3.5
4.0																										4.0
4.5																										4.5
5.0																										5.0
6.0																										6.0
7.0																										7.0
8.0																										8.0
9.0																										9.0
10.0	3.9					4.4																				10.0
11.0	3.9					4.4					3.7															11.0
12.0	3.9	3.9				4.4	4.4				3.7															12.0
14.0	3.9	3.9	3.9			4.4	4.4	4.4			3.7	3.7	3.7			3.2	3.2									14.0
16.0	3.9	3.9	3.9	3.9	3.9	4.4	4.4	4.4	4.4	4.4	3.7	3.7	3.7	3.7	3.7	3.2	3.2	3.2	3.2							16.0
18.0	3.9	3.9	3.9	3.9	3.9	4.4	4.4	4.4	4.4	4.4	3.7	3.7	3.7	3.7	3.7	3.2	3.2	3.2	3.2	3.2						18.0
20.0	3.9	3.9	3.9	3.9		3.8	4.1	4.4	4.4		3.7	3.7	3.7	3.7		3.2	3.2	3.2	3.2	3.2						20.0
22.0	3.3	3.6	3.9	3.9		2.8	3.1	3.5	3.7		2.9	3.2	3.6	3.7			3.2	3.2	3.2							22.0
24.0	2.5	2.7	3.0	3.2				2.5	2.8				2.7	3.0					2.9							24.0
26.0		2.0	2.3	2.5																						26.0
28.0				1.8																						28.0
30.0																										30.0
32.0																										32.0
34.0																										34.0
36.0																										36.0
38.0																										38.0
40.0																										40.0
42.0																										42.0
44.0																										44.0
46.0																										46.0
48.0																										48.0
50.0																										50.0
52.0																										52.0
54.0																										54.0
56.0																										56.0
58.0																										58.0
60.0																										60.0
64.0																										64.0
1	46	46	46	46	46	92	92	92	92	92	92	92	92	92	92	100	100	100	100	100						1
2	92	92	92	92	92	92	92	92	92	92	92	92	92	92	92	100	100	100	100	100						2
3	92	92	92	92	92	92	92	92	92	92	92	92	92	92	92	100	100	100	100	100						3
4	92	92	92	92	92	92	92	92	92	92	92	92	92	92	92	100	100	100	100	100						4
5	92	92	92	92	92	92	92	92	92	92	92	92	92	92	92	100	100	100	100	100						5
6	92	92	92	92	92	46	46	46	46	46	92	92	92	92	92	100	100	100	100	100						6
ID	28	28	28	28	28	39	39	39	39	39	29	29	29	29	29	19	19	19	19	19						ID
[DEG]	68~84.7	67~84.7	68~84.7	67~84.7	78~84.7	70~84.7	71~84.7	70~84.7	71~84.7	78~84.7	72~84.7	73~84.7	72~84.7	73~84.7	79~84.7	75~84.7	74~84.7	76~84.7	75~84.7	79~84.7						[DEG]
	1	1	1	1	1	1	1	1	1	1	1	1	1	1	1	1	1	1	1	1						
	8.7t	8.7t	8.7t	8.7t	8.7t	8.7t	8.7t	8.7t	8.7t	8.7t	8.7t	8.7t	8.7t	8.7t	8.7t	8.7t	8.7t	8.7t	8.7t	8.7t						

FLJ	1.6m + 12.4m	9.6 t	8.0m x 6.2m	360 °	JPN

m	11.4	11.4	11.4	11.4	11.4	15.1	15.1	15.1	15.1	15.1	15.1	15.1	15.1	15.1	15.1	15.1	15.1	15.1	15.1	15.1	18.8	18.8	18.8	18.8	18.8	m
°	5	15	30	45	60	5	15	30	45	60	5	15	30	45	60	5	15	30	45	60	5	15	30	45	60	°
3.0	4.3																									3.0
3.5	4.3																									3.5
4.0	4.3					4.3					4.3					4.3					4.3					4.0
4.5	4.3					4.3					4.3					4.3					4.3					4.5
5.0	4.3					4.3					4.3					4.3					4.3					5.0
6.0	4.3	4.3				4.3	4.3				4.3	4.3				4.3	4.3				4.3					6.0
7.0	4.3	4.3				4.3	4.3				4.3	4.3				4.3	4.3				4.3	4.3				7.0
8.0	4.3	4.3				4.3	4.3				4.3	4.3				4.3	4.3				4.3	4.3				8.0
9.0	4.3	4.3	4.3			4.3	4.3	4.3			4.3	4.3	4.3			4.3	4.3	4.3			4.3	4.3				9.0
10.0	4.3	4.3	4.1			4.3	4.3	4.3			4.3	4.3	4.3			4.3	4.3	4.3			4.3	4.3	4.3			10.0
11.0	4.3	4.3	3.9	3.2		4.3	4.3	4.1	3.3		4.3	4.3	4.1	3.3		4.3	4.3	4.1	3.3		4.3	4.3	4.1			11.0
12.0	4.3	4.3	3.7	3.1		4.3	4.3	3.9	3.2		4.3	4.3	3.9	3.2		4.3	4.3	3.9	3.2		4.3	4.3	3.9	3.3		12.0
14.0	4.3	4.0	3.3	2.9		4.3	4.3	3.5	3.0		4.3	4.3	3.5	3.0		4.3	4.3	3.5	3.0		4.3	4.3	3.7	3.1		14.0
16.0	3.8	3.5	3.0	2.7		4.3	3.9	3.3	2.8		4.3	3.9	3.3	2.8		4.3	3.9	3.3	2.8		4.3	4.1	3.4	2.9		16.0
18.0	3.4	3.2	2.8			3.9	3.6	3.0	2.7		3.9	3.6	3.0	2.7		3.9	3.6	3.0	2.7		4.3	3.8	3.2	2.8		18.0
20.0	3.0	2.9				3.5	3.3	2.9			3.5	3.3	2.9			3.5	3.3	2.9			4.0	3.5	3.0	2.7		20.0
22.0	2.7					3.2	3.0				3.2	3.0				3.2	3.0				3.6	3.3	2.9			22.0
24.0						2.9	2.8				2.9	2.8				2.9	2.8				3.3	3.1	2.8			24.0
26.0																					3.0	2.9				26.0
28.0																					2.8					28.0
30.0																										30.0
32.0																										32.0
34.0																										34.0
36.0																										36.0
38.0																										38.0
40.0																										40.0
42.0																										42.0
44.0																										44.0
46.0																										46.0
48.0																										48.0
50.0																										50.0
52.0																										52.0
54.0																										54.0
56.0																										56.0
58.0																										58.0
60.0																										60.0
64.0																										64.0
1	0	0	0	0		0	0	0	0		0	0	0	0		0	0	0	0		0	0	0	0		1
2	0	0	0	0		0	0	0	0		0	0	0	0		46	46	46	46		0	0	0	0		2
3	0	0	0	0		0	0	0	0		46	46	46	46		0	0	0	0		0	0	0	0		3
4	0	0	0	0		46	46	46	46		0	0	0	0		0	0	0	0		0	0	0	0		4
5	0	0	0	0		0	0	0	0		0	0	0	0		0	0	0	0		46	46	46	46		5
6	0	0	0	0		0	0	0	0		0	0	0	0		0	0	0	0		46	46	46	46		6
ID	1	1	1	1		76	76	76	76		105	105	105	105		131	131	131	131		30	30	30	30		ID
[DEG]	0~84.7	0~84.7	0~84.7	0~84.7		29~84.7	32~84.7	51~84.7	60~84.7		29~84.7	31~84.7	51~84.7	60~84.7		29~84.7	31~84.7	51~84.7	60~84.7		26~84.7	37~84.7	46~84.7	60~84.7		[DEG]
	1	1	1	1		1	1	1	1		1	1	1	1		1	1	1	1		1	1	1	1		
	8.7t	8.7t	8.7t	8.7t		8.7t	8.7t	8.7t	8.7t		8.7t	8.7t	8.7t	8.7t		8.7t	8.7t	8.7t	8.7t		8.7t	8.7t	8.7t	8.7t		

m	18.8	18.8	18.8	18.8	18.8	18.8	18.8	18.8	18.8	18.8	18.8	18.8	18.8	18.8	18.8	22.6	22.6	22.6	22.6	22.6	26.3	26.3	26.3	26.3	26.3	m
°	5	15	30	45	60	5	15	30	45	60	5	15	30	45	60	5	15	30	45	60	5	15	30	45	60	°
3.0																										3.0
3.5																										3.5
4.0	4.3					4.3					4.3															4.0
4.5	4.3					4.3					4.3															4.5
5.0	4.3					4.3					4.3					4.3										5.0
6.0	4.3					4.3					4.3					4.3					4.3					6.0
7.0	4.3	4.3				4.3	4.3				4.3	4.3				4.3	4.3				4.3					7.0
8.0	4.3	4.3				4.3	4.3				4.3	4.3				4.3	4.3				4.3	4.3				8.0
9.0	4.3	4.3				4.3	4.3				4.3	4.3				4.3	4.3				4.3	4.3				9.0
10.0	4.3	4.3	4.3			4.3	4.3	4.3			4.3	4.3	4.3			4.3	4.3				4.3	4.3				10.0
11.0	4.3	4.3	4.1			4.3	4.3	4.2			4.3	4.3	4.2			4.3	4.3	4.1			4.3	4.3	4.3			11.0
12.0	4.3	4.3	4.0	3.3		4.3	4.3	4.0	3.3		4.3	4.3	4.0	3.3		4.3	4.3	4.0			4.3	4.3	4.2			12.0
14.0	4.3	4.3	3.7	3.1		4.3	4.3	3.7	3.1		4.3	4.3	3.7	3.1		4.3	4.3	3.7	3.1		4.3	4.3	3.9	3.2	2.7	14.0
16.0	4.3	4.1	3.5	2.9		4.3	4.2	3.5	2.9		4.3	4.2	3.5	2.9		4.3	4.2	3.5	3.0		4.3	4.3	3.7	3.0	2.6	16.0
18.0	4.3	3.8	3.2	2.8		4.3	3.8	3.2	2.8		4.3	3.9	3.2	2.8		4.3	3.9	3.3	2.9		4.3	4.2	3.5	2.9		18.0
20.0	4.0	3.6	3.0	2.7		4.0	3.6	3.0	2.7		4.0	3.6	3.0	2.7		4.2	3.7	3.1	2.8		4.1	4.0	3.3	2.8		20.0
22.0	3.6	3.3	2.9			3.6	3.3	2.9			3.6	3.3	2.9			3.9	3.4	3.0			3.1	3.5	3.2	2.7		22.0
24.0	3.3	3.1	2.8			3.3	3.1	2.8			3.3	3.1	2.8			3.6	3.3	2.9			2.2	2.6	3.0			24.0
26.0	3.0	2.9				3.0	2.9				2.8	2.9				3.4	3.1	2.8			1.5	1.8	2.2			26.0
28.0	2.8					2.6					2.2					3.2	3.0				0.9	1.2	1.5			28.0
30.0																2.7	2.8									30.0
32.0																2.2										32.0
34.0																										34.0
36.0																										36.0
38.0																										38.0
40.0																										40.0
42.0																										42.0
44.0																										44.0
46.0																										46.0
48.0																										48.0
50.0																										50.0
52.0																										52.0
54.0																										54.0
56.0																										56.0
58.0																										58.0
60.0																										60.0
64.0																										64.0
1	0	0	0	0		0	0	0	0		0	0	0	0		0	0	0	0		92	92	92	92	92	1
2	0	0	0	0		0	0	0	0		46	46	46	46		0	0	0	0		92	92	92	92	92	2
3	0	0	0	0		46	46	46	46		46	46	46	46		0	0	0	0		0	0	0	0	0	3
4	46	46	46	46		46	46	46	46		0	0	0	0		0	0	0	0		0	0	0	0	0	4
5	46	46	46	46		0	0	0	0		0	0	0	0		46	46	46	46		0	0	0	0	0	5
6	0	0	0	0		0	0	0	0		0	0	0	0		92	92	92	92		0	0	0	0	0	6
ID	58	58	58	58		88	88	88	88		113	113	113	113		20	20	20	20		134	134	134	134	134	ID
[DEG]	26~84.7	37~84.7	46~84.7	60~84.7		26~84.7	37~84.7	46~84.7	60~84.7		26~84.7	37~84.7	46~84.7	60~84.7		24~84.7	34~84.7	49~84.7	65~84.7		44~84.7	46~84.7	49~84.7	64~84.7	77~84.7	[DEG]
	1	1	1	1		1	1	1	1		1	1	1	1		1	1	1	1		1	1	1	1	1	
	8.7t	8.7t	8.7t	8.7t		8.7t	8.7t	8.7t	8.7t		8.7t	8.7t	8.7t	8.7t		8.7t	8.7t	8.7t	8.7t		8.7t	8.7t	8.7t	8.7t	8.7t	

フルオートラフィングジブ

FLJ	1.6m + 12.4m	9.6 t	8.0m x 6.2m	360 °	JPN

m	30.0	30.0	30.0	30.0	30.0	30.0	30.0	30.0	30.0	30.0	33.7	33.7	33.7	33.7	33.7	37.4	37.4	37.4	37.4	37.4	37.4	37.4	37.4	37.4	37.4	m
°	5	15	30	45	60	5	15	30	45	60	5	15	30	45	60	5	15	30	45	60	5	15	30	45	60	°
3.0																										3.0
3.5																										3.5
4.0																										4.0
4.5																										4.5
5.0																										5.0
6.0	4.0					4.3																				6.0
7.0	4.0					4.3					4.3					4.1										7.0
8.0	4.0					4.3					4.3					4.1					4.3					8.0
9.0	4.0	4.0				4.3	4.3				4.3	4.3				4.1					4.3					9.0
10.0	4.0	4.0				4.3	4.3				4.3	4.3				4.1	4.1				4.3	4.3				10.0
11.0	4.0	4.0				4.3	4.3	4.3			4.3	4.3				4.1	4.1				4.3	4.3				11.0
12.0	4.0	4.0	4.0			4.3	4.3	4.2			4.3	4.3	4.2			4.1	4.1				4.3	4.3				12.0
14.0	4.0	4.0	3.7	3.2		4.3	4.3	3.9	3.2		4.3	4.3	3.9	3.3		4.1	4.1	3.9			4.3	4.3	3.7			14.0
16.0	4.0	4.0	3.5	3.1		4.3	4.3	3.7	3.1		4.3	4.3	3.7	3.2	2.6	4.1	4.1	3.7	3.2	2.6	4.3	4.3	3.5	3.1		16.0
18.0	4.0	4.0	3.4	3.0		4.3	4.3	3.5	3.0		4.3	4.3	3.6	3.0	2.6	4.1	4.1	3.6	3.1	2.6	4.3	4.1	3.4	3.0		18.0
20.0	4.0	3.8	3.2	2.9		4.0	4.1	3.4	2.9		4.0	4.1	3.4	2.9		4.0	4.1	3.4	3.0		4.3	3.9	3.2	2.9		20.0
22.0	4.0	3.6	3.1	2.8		3.0	3.4	3.2	2.8		2.9	3.4	3.3	2.8		3.0	3.4	3.3	2.9		4.2	3.7	3.1	2.8		22.0
24.0	3.7	3.4	3.0	2.7		2.1	2.5	3.0	2.7		2.1	2.5	3.0	2.8		2.1	2.5	3.1	2.8		3.9	3.5	3.0	2.7		24.0
26.0	3.4	3.3	2.9			1.4	1.8	2.2			1.4	1.7	2.2	2.5			1.8	2.3	2.6		3.3	3.4	2.9	2.7		26.0
28.0	3.0	3.1	2.8				1.1	1.5					1.5					1.6	1.9		2.7	2.9	2.8	2.6		28.0
30.0	2.5	2.6	2.7																		2.2	2.4	2.6			30.0
32.0	2.0	2.2	2.3																		1.7	1.9	2.1			32.0
34.0	1.6	1.8																			1.3	1.5	1.7			34.0
36.0		1.4																			1.0	1.1	1.3			36.0
38.0																										38.0
40.0																										40.0
42.0																										42.0
44.0																										44.0
46.0																										46.0
48.0																										48.0
50.0																										50.0
52.0																										52.0
54.0																										54.0
56.0																										56.0
58.0																										58.0
60.0																										60.0
64.0																										64.0
1	0	0	0	0		92	92	92	92		92	92	92	92	92	92	92	92	92	92	0	0	0	0		1
2	0	0	0	0		92	92	92	92		92	92	92	92	92	92	92	92	92	92	0	0	0	0		2
3	0	0	0	0		46	46	46	46		92	92	92	92	92	92	92	92	92	92	46	46	46	46		3
4	46	46	46	46		0	0	0	0		0	0	0	0	0	46	46	46	46	46	92	92	92	92		4
5	92	92	92	92		0	0	0	0		0	0	0	0	0	0	0	0	0	0	92	92	92	92		5
6	92	92	92	92		0	0	0	0		0	0	0	0	0	0	0	0	0	0	92	92	92	92		6
ID	22	22	22	22		116	116	116	116		110	110	110	110	110	93	93	93	93	93	24	24	24	24		ID
[DEG]	38~84.7	35~84.7	47~84.7	64~84.7		53~84.7	52~84.7	55~84.7	64~84.7		57~84.7	59~84.7	59~84.7	64~84.7	77~84.7	63~84.7	62~84.7	62~84.7	64~84.7	79~84.7	45~84.7	47~84.7	50~84.7	64~84.7		[DEG]
	1	1	1	1		1	1	1	1		1	1	1	1	1	1	1	1	1	1	1	1	1	1		
	8.7t	8.7t	8.7t	8.7t		8.7t	8.7t	8.7t	8.7t		8.7t	8.7t	8.7t	8.7t	8.7t	8.7t	8.7t	8.7t	8.7t	8.7t	8.7t	8.7t	8.7t	8.7t		

m	41.2	41.2	41.2	41.2	41.2	44.9	44.9	44.9	44.9	44.9	44.9	44.9	44.9	44.9	44.9	48.6	48.6	48.6	48.6	48.6	48.6	48.6	48.6	48.6	48.6	m
°	5	15	30	45	60	5	15	30	45	60	5	15	30	45	60	5	15	30	45	60	5	15	30	45	60	°
3.0																										3.0
3.5																										3.5
4.0																										4.0
4.5																										4.5
5.0																										5.0
6.0																										6.0
7.0																										7.0
8.0	4.3																									8.0
9.0	4.3										4.0															9.0
10.0	4.3					3.0					4.0					3.2					3.6					10.0
11.0	4.3	4.3				3.0					4.0	4.0				3.2					3.6					11.0
12.0	4.3	4.3				3.0	3.0				4.0	4.0				3.2	3.2				3.6	3.6				12.0
14.0	4.3	4.3	3.9			3.0	3.0				4.0	4.0				3.2	3.2				3.6	3.6				14.0
16.0	4.3	4.3	3.7	3.2		3.0	3.0	3.0			4.0	4.0	3.7			3.2	3.2	3.2			3.6	3.6	3.6			16.0
18.0	4.3	4.3	3.5	3.1	2.6	3.0	3.0	3.0	2.9		4.0	4.0	3.5	3.0	2.6	3.2	3.2	3.2	3.0		3.6	3.6	3.5	3.0		18.0
20.0	4.1	4.1	3.4	3.0	2.6	3.0	3.0	3.0	2.9		4.0	4.0	3.4	2.9	2.6	3.2	3.2	3.2	2.9	2.6	3.6	3.6	3.3	2.9	2.6	20.0
22.0	3.0	3.5	3.3	2.9		3.0	3.0	3.0	2.8		3.1	3.6	3.2	2.9		3.2	3.2	3.2	2.8	2.5	3.2	3.6	3.2	2.8	2.5	22.0
24.0	2.2	2.6	3.2	2.8		3.0	3.0	3.0	2.7		2.3	2.7	3.1	2.8		2.9	3.2	3.1	2.7		2.4	2.8	3.1	2.8		24.0
26.0		1.8	2.3	2.7		2.8	3.0	2.9	2.6			2.0	2.5	2.7		2.2	2.5	3.0	2.7				2.6	2.7		26.0
28.0			1.7	2.0		2.2	2.5	2.8	2.6					2.1			1.9	2.3	2.6					2.2		28.0
30.0						1.7	2.0	2.3	2.5									1.7	2.0							30.0
32.0						1.3	1.5	1.8	2.0																	32.0
34.0							1.1	1.3																		34.0
36.0								1.0																		36.0
38.0																										38.0
40.0																										40.0
42.0																										42.0
44.0																										44.0
46.0																										46.0
48.0																										48.0
50.0																										50.0
52.0																										52.0
54.0																										54.0
56.0																										56.0
58.0																										58.0
60.0																										60.0
64.0																										64.0
1	92	92	92	92	92	0	0	0	0		92	92	92	92	92	46	46	46	46	46	92	92	92	92	92	1
2	92	92	92	92	92	46	46	46	46		92	92	92	92	92	92	92	92	92	92	92	92	92	92	92	2
3	92	92	92	92	92	92	92	92	92		92	92	92	92	92	92	92	92	92	92	92	92	92	92	92	3
4	92	92	92	92	92	92	92	92	92		92	92	92	92	92	92	92	92	92	92	92	92	92	92	92	4
5	0	0	0	0	0	92	92	92	92		46	46	46	46	46	92	92	92	92	92	92	92	92	92	92	5
6	0	0	0	0	0	92	92	92	92		0	0	0	0	0	46	46	46	46	46	0	0	0	0	0	6
ID	83	83	83	83	83	26	26	26	26		65	65	65	65	65	38	38	38	38	38	49	49	49	49	49	ID
[DEG]	65~84.7	65~84.7	65~84.7	66~84.7	78~84.7	58~84.7	57~84.7	57~84.7	64~84.7		67~84.7	67~84.7	69~84.7	69~84.7	79~84.7	67~84.7	67~84.7	67~84.7	68~84.7	78~84.7	69~84.7	71~84.7	71~84.7	71~84.7	78~84.7	[DEG]
	1	1	1	1	1	1	1	1	1		1	1	1	1	1	1	1	1	1	1	1	1	1	1	1	
	8.7t	8.7t	8.7t	8.7t	8.7t	8.7t	8.7t	8.7t	8.7t		8.7t	8.7t	8.7t	8.7t	8.7t	8.7t	8.7t	8.7t	8.7t	8.7t	8.7t	8.7t	8.7t	8.7t	8.7t	

FLJ	1.6m + 12.4m	9.6 t	8.0m x 6.2m	360 °	JPN

m	52.3	52.3	52.3	52.3	52.3	52.3	52.3	52.3	52.3	52.3	56.0	56.0	56.0	56.0	56.0	60.0	60.0	60.0	60.0	60.0						m
°	5	15	30	45	60	5	15	30	45	60	5	15	30	45	60	5	15	30	45	60						°
3.0																										3.0
3.5																										3.5
4.0																										4.0
4.5																										4.5
5.0																										5.0
6.0																										6.0
7.0																										7.0
8.0																										8.0
9.0																										9.0
10.0																										10.0
11.0	2.7					3.0																				11.0
12.0	2.7					3.0					2.6															12.0
14.0	2.7	2.7				3.0	3.0				2.6	2.6				1.9										14.0
16.0	2.7	2.7	2.7			3.0	3.0	3.0			2.6	2.6				1.9	1.9									16.0
18.0	2.7	2.7	2.7			3.0	3.0	3.0			2.6	2.6	2.6			1.9	1.9	1.9								18.0
20.0	2.7	2.7	2.7	2.7	2.6	3.0	3.0	3.0	2.9	2.6	2.6	2.6	2.6	2.6		1.9	1.9	1.9	1.9							20.0
22.0	2.7	2.7	2.7	2.7	2.5	3.0	3.0	3.0	2.8	2.5	2.6	2.6	2.6	2.6	2.5	1.9	1.9	1.9	1.9	1.9						22.0
24.0	2.7	2.7	2.7	2.7		2.5	2.9	3.0	2.7		2.6	2.6	2.6	2.6	2.5		1.9	1.9	1.9	1.9						24.0
26.0	2.3	2.6	2.7	2.6				2.7	2.7				2.6	2.6				1.9	1.9							26.0
28.0		2.0	2.4	2.6					2.4					2.5					1.9							28.0
30.0			1.8	2.1																						30.0
32.0																										32.0
34.0																										34.0
36.0																										36.0
38.0																										38.0
40.0																										40.0
42.0																										42.0
44.0																										44.0
46.0																										46.0
48.0																										48.0
50.0																										50.0
52.0																										52.0
54.0																										54.0
56.0																										56.0
58.0																										58.0
60.0																										60.0
64.0																										64.0
1	46	46	46	46	46	92	92	92	92	92	92	92	92	92	92	100	100	100	100	100						1
2	92	92	92	92	92	92	92	92	92	92	92	92	92	92	92	100	100	100	100	100						2
3	92	92	92	92	92	92	92	92	92	92	92	92	92	92	92	100	100	100	100	100						3
4	92	92	92	92	92	92	92	92	92	92	92	92	92	92	92	100	100	100	100	100						4
5	92	92	92	92	92	92	92	92	92	92	92	92	92	92	92	100	100	100	100	100						5
6	92	92	92	92	92	46	46	46	46	46	92	92	92	92	92	100	100	100	100	100						6
ID	28	28	28	28	28	39	39	39	39	39	29	29	29	29	29	19	19	19	19	19						ID
[DEG]	69~84.7	69~84.7	69~84.7	70~84.7	79~84.7	71~84.7	73~84.7	73~84.7	72~84.7	79~84.7	72~84.7	74~84.7	74~84.7	74~84.7	79~84.7	75~84.7	75~84.7	75~84.7	75~84.7	79~84.7						[DEG]
	1	1	1	1	1	1	1	1	1	1	1	1	1	1	1	1	1	1	1	1						
	8.7t	8.7t	8.7t	8.7t	8.7t	8.7t	8.7t	8.7t	8.7t	8.7t	8.7t	8.7t	8.7t	8.7t	8.7t	8.7t	8.7t	8.7t	8.7t	8.7t						

FLJ	1.6m + 17.4m	9.6 t	8.0m x 6.2m	360 °	JPN

m	11.4	11.4	11.4	11.4	11.4	15.1	15.1	15.1	15.1	15.1	15.1	15.1	15.1	15.1	15.1	15.1	15.1	15.1	15.1	15.1	18.8	18.8	18.8	18.8	18.8	m
°	5	15	30	45	60	5	15	30	45	60	5	15	30	45	60	5	15	30	45	60	5	15	30	45	60	°
3.0																										3.0
3.5																										3.5
4.0																										4.0
4.5	3.3																									4.5
5.0	3.3					3.1					3.3					3.3										5.0
6.0	3.3					3.1					3.3					3.3					2.7					6.0
7.0	3.3					3.1					3.3					3.3					2.7					7.0
8.0	3.3	3.3				3.1					3.3					3.3					2.7					8.0
9.0	3.3	3.3				3.1	3.1				3.3	3.3				3.3	3.3				2.7	2.7				9.0
10.0	3.3	3.2				3.1	3.1				3.3	3.3				3.3	3.3				2.7	2.7				10.0
11.0	3.3	3.0				3.1	3.1				3.3	3.1				3.3	3.1				2.7	2.7				11.0
12.0	3.2	2.9	2.5			3.1	2.9				3.3	2.9				3.3	3.0				2.7	2.7				12.0
14.0	2.9	2.6	2.3			3.1	2.7	2.3			3.1	2.7	2.3			3.1	2.7	2.3			2.7	2.7	2.3			14.0
16.0	2.6	2.4	2.1	1.8		2.8	2.5	2.2	1.9		2.8	2.5	2.2	1.9		2.8	2.5	2.2	1.9		2.7	2.5	2.2			16.0
18.0	2.4	2.2	1.9	1.7		2.6	2.3	2.0	1.8		2.6	2.3	2.0	1.8		2.6	2.3	2.0	1.8		2.7	2.4	2.0	1.8		18.0
20.0	2.2	2.0	1.8	1.6		2.4	2.1	1.9	1.7		2.4	2.1	1.9	1.7		2.4	2.1	1.9	1.7		2.5	2.2	1.9	1.7		20.0
22.0	2.0	1.9	1.7			2.2	2.0	1.8	1.6		2.2	2.0	1.8	1.6		2.2	2.0	1.8	1.6		2.3	2.1	1.8	1.6		22.0
24.0	1.8	1.7				2.1	1.9	1.7			2.1	1.9	1.7			2.1	1.9	1.7			2.2	2.0	1.8	1.6		24.0
26.0	1.7	1.6				1.9	1.8	1.6			1.9	1.8	1.6			1.9	1.8	1.6			2.0	1.9	1.7			26.0
28.0						1.8	1.6				1.8	1.6				1.8	1.6				1.9	1.8	1.6			28.0
30.0						1.6					1.6					1.6					1.9	1.7				30.0
32.0																					1.7	1.6				32.0
34.0																					1.6					34.0
36.0																										36.0
38.0																										38.0
40.0																										40.0
42.0																										42.0
44.0																										44.0
46.0																										46.0
48.0																										48.0
50.0																										50.0
52.0																										52.0
54.0																										54.0
56.0																										56.0
58.0																										58.0
60.0																										60.0
64.0																										64.0
1	0	0	0	0		0	0	0	0		0	0	0	0		0	0	0	0		0	0	0	0		1
2	0	0	0	0		0	0	0	0		0	0	0	0		46	46	46	46		0	0	0	0		2
3	0	0	0	0		0	0	0	0		46	46	46	46		0	0	0	0		0	0	0	0		3
4	0	0	0	0		46	46	46	46		0	0	0	0		0	0	0	0		0	0	0	0		4
5	0	0	0	0		0	0	0	0		0	0	0	0		0	0	0	0		46	46	46	46		5
6	0	0	0	0		0	0	0	0		0	0	0	0		0	0	0	0		46	46	46	46		6
ID	1	1	1	1		76	76	76	76		105	105	105	105		131	131	131	131		30	30	30	30		ID
[DEG]	0~84.7	0~84.7	0~84.7	0~84.7		23~84.7	36~84.7	47~84.7	63~84.7		23~84.7	36~84.7	47~84.7	63~84.7		23~84.7	36~84.7	47~84.7	63~84.7		21~84.7	33~84.7	49~84.7	63~84.7		[DEG]
	1	1	1	1		1	1	1	1		1	1	1	1		1	1	1	1		1	1	1	1		
	8.7t	8.7t	8.7t	8.7t		8.7t	8.7t	8.7t	8.7t		8.7t	8.7t	8.7t	8.7t		8.7t	8.7t	8.7t	8.7t		8.7t	8.7t	8.7t	8.7t		

フルオートラフィングジブ

FLJ	1.6m + 17.4m	9.6 t	8.0m x 6.2m	360 °	JPN

m	18.8	18.8	18.8	18.8	18.8	18.8	18.8	18.8	18.8	18.8	18.8	18.8	18.8	18.8	18.8	22.6	22.6	22.6	22.6	22.6	26.3	26.3	26.3	26.3	26.3	m
°	5	15	30	45	60	5	15	30	45	60	5	15	30	45	60	5	15	30	45	60	5	15	30	45	60	°
3.0																										3.0
3.5																										3.5
4.0																										4.0
4.5																										4.5
5.0																										5.0
6.0	2.9					3.2					3.3					2.5										6.0
7.0	2.9					3.2					3.3					2.5					3.3					7.0
8.0	2.9					3.2					3.3					2.5					3.3					8.0
9.0	2.9	2.9				3.2	3.2				3.3	3.3				2.5					3.3					9.0
10.0	2.9	2.9				3.2	3.2				3.3	3.3				2.5	2.5				3.3	3.3				10.0
11.0	2.9	2.9				3.2	3.2				3.3	3.2				2.5	2.5				3.3	3.3				11.0
12.0	2.9	2.9				3.2	3.0				3.3	3.0				2.5	2.5				3.3	3.2				12.0
14.0	2.9	2.8	2.3			3.2	2.8	2.3			3.2	2.8	2.3			2.5	2.5	2.3			3.3	2.9	2.4			14.0
16.0	2.9	2.5	2.2	1.9		2.9	2.6	2.2	1.9		3.0	2.6	2.2	1.9		2.5	2.5	2.2			3.2	2.7	2.2			16.0
18.0	2.7	2.4	2.1	1.8		2.7	2.4	2.1	1.8		2.7	2.4	2.1	1.8		2.5	2.4	2.1	1.8		3.0	2.5	2.1	1.9		18.0
20.0	2.5	2.2	1.9	1.7		2.5	2.2	1.9	1.7		2.5	2.2	2.0	1.7		2.5	2.3	1.9	1.7		2.8	2.4	2.0	1.8		20.0
22.0	2.3	2.1	1.9	1.6		2.3	2.1	1.9	1.6		2.4	2.1	1.9	1.6		2.4	2.1	1.9	1.7		2.6	2.3	1.9	1.7		22.0
24.0	2.2	2.0	1.8	1.6		2.2	2.0	1.8	1.6		2.2	2.0	1.8	1.6		2.3	2.0	1.8	1.6		2.4	2.1	1.9	1.6		24.0
26.0	2.1	1.9	1.7			2.1	1.9	1.7			2.1	1.9	1.7			2.1	1.9	1.7	1.5		2.3	2.0	1.8	1.6		26.0
28.0	1.9	1.8	1.6			2.0	1.8	1.6			2.0	1.8	1.6			2.0	1.8	1.7			1.7	1.9	1.7	1.5		28.0
30.0	1.9	1.7				1.9	1.7				1.9	1.7				1.9	1.8	1.6			1.2	1.5	1.7			30.0
32.0	1.7	1.6				1.7	1.6				1.7	1.6				1.8	1.7					1.0	1.4			32.0
34.0	1.6					1.6					1.6					1.8	1.6						0.9			34.0
36.0																1.7										36.0
38.0																										38.0
40.0																										40.0
42.0																										42.0
44.0																										44.0
46.0																										46.0
48.0																										48.0
50.0																										50.0
52.0																										52.0
54.0																										54.0
56.0																										56.0
58.0																										58.0
60.0																										60.0
64.0																										64.0
1	0	0	0	0		0	0	0	0		0	0	0	0		0	0	0	0		92	92	92	92		1
2	0	0	0	0		0	0	0	0		46	46	46	46		0	0	0	0		92	92	92	92		2
3	0	0	0	0		46	46	46	46		46	46	46	46		0	0	0	0		0	0	0	0		3
4	46	46	46	46		46	46	46	46		0	0	0	0		0	0	0	0		0	0	0	0		4
5	46	46	46	46		0	0	0	0		0	0	0	0		46	46	46	46		0	0	0	0		5
6	0	0	0	0		0	0	0	0		0	0	0	0		92	92	92	92		0	0	0	0		6
ID	58	58	58	58		88	88	88	88		113	113	113	113		20	20	20	20		134	134	134	134		ID
[DEG]	21~84.7	32~84.7	49~84.7	63~84.7		21~84.7	32~84.7	49~84.7	63~84.7		20~84.7	32~84.7	49~84.7	63~84.7		28~84.7	37~84.7	51~84.7	63~84.7		48~84.7	48~84.7	47~84.7	62~84.7		[DEG]
	1	1	1	1		1	1	1	1		1	1	1	1		1	1	1	1		1	1	1	1		
	8.7t	8.7t	8.7t	8.7t		8.7t	8.7t	8.7t	8.7t		8.7t	8.7t	8.7t	8.7t		8.7t	8.7t	8.7t	8.7t		8.7t	8.7t	8.7t	8.7t		

m	30.0	30.0	30.0	30.0	30.0	30.0	30.0	30.0	30.0	30.0	33.7	33.7	33.7	33.7	33.7	37.4	37.4	37.4	37.4	37.4	37.4	37.4	37.4	37.4	37.4	m
°	5	15	30	45	60	5	15	30	45	60	5	15	30	45	60	5	15	30	45	60	5	15	30	45	60	°
3.0																										3.0
3.5																										3.5
4.0																										4.0
4.5																										4.5
5.0																										5.0
6.0																										6.0
7.0																										7.0
8.0	2.3					3.2					3.1															8.0
9.0	2.3					3.2					3.1					2.4					2.5					9.0
10.0	2.3					3.2					3.1					2.4					2.5					10.0
11.0	2.3	2.3				3.2	3.2				3.1					2.4					2.5					11.0
12.0	2.3	2.3				3.2	3.2				3.1	3.1				2.4	2.4				2.5					12.0
14.0	2.3	2.3				3.2	2.9				3.1	3.0				2.4	2.4				2.5	2.5				14.0
16.0	2.3	2.3	2.2			3.2	2.8	2.3			3.1	2.8	2.3			2.4	2.4	2.2			2.5	2.5				16.0
18.0	2.3	2.3	2.1			3.1	2.6	2.2	1.9		3.1	2.6	2.2			2.4	2.4	2.2			2.5	2.5	2.1			18.0
20.0	2.3	2.3	2.0	1.8		2.9	2.4	2.1	1.8	1.5	2.9	2.5	2.1	1.8		2.4	2.4	2.1	1.8		2.5	2.4	2.0	1.8		20.0
22.0	2.3	2.2	1.9	1.7		2.7	2.3	2.0	1.7	1.5	2.7	2.3	2.0	1.8		2.4	2.4	2.0	1.8	1.5	2.5	2.2	1.9	1.7	1.5	22.0
24.0	2.3	2.1	1.8	1.7		2.5	2.2	1.9	1.7		2.6	2.2	1.9	1.7		2.4	2.2	1.9	1.7	1.5	2.5	2.1	1.8	1.7	1.5	24.0
26.0	2.3	2.0	1.8	1.6		2.2	2.1	1.8	1.6		2.1	2.1	1.8	1.6		2.1	2.2	1.8	1.7		2.4	2.1	1.8	1.6		26.0
28.0	2.2	1.9	1.7	1.6		1.6	2.0	1.8	1.6		1.5	1.9	1.8	1.6			1.9	1.8	1.6		2.2	2.0	1.7	1.6		28.0
30.0	2.1	1.8	1.6	1.5		1.1	1.4	1.7	1.5			1.3	1.7	1.5				1.7	1.6		2.1	1.9	1.7	1.5		30.0
32.0	2.0	1.8	1.6				0.9	1.4					1.3	1.5				1.4	1.5		2.1	1.8	1.6	1.5		32.0
34.0	1.9	1.7	1.6					0.9													1.7	1.8	1.6	1.5		34.0
36.0		1.7	1.5																		1.4	1.6	1.5			36.0
38.0		1.6																			1.1	1.3	1.5			38.0
40.0		1.3																				1.0	1.2			40.0
42.0		1.0																					0.9			42.0
44.0																										44.0
46.0																										46.0
48.0																										48.0
50.0																										50.0
52.0																										52.0
54.0																										54.0
56.0																										56.0
58.0																										58.0
60.0																										60.0
64.0																										64.0
1	0	0	0	0		92	92	92	92	92	92	92	92	92		92	92	92	92	92	0	0	0	0	0	1
2	0	0	0	0		92	92	92	92	92	92	92	92	92		92	92	92	92	92	0	0	0	0	0	2
3	0	0	0	0		46	46	46	46	46	92	92	92	92		92	92	92	92	92	46	46	46	46	46	3
4	46	46	46	46		0	0	0	0	0	0	0	0	0		46	46	46	46	46	92	92	92	92	92	4
5	92	92	92	92		0	0	0	0	0	0	0	0	0		0	0	0	0	0	92	92	92	92	92	5
6	92	92	92	92		0	0	0	0	0	0	0	0	0		0	0	0	0	0	92	92	92	92	92	6
ID	22	22	22	22		116	116	116	116	116	110	110	110	110		93	93	93	93	93	24	24	24	24	24	ID
[DEG]	48~84.7	32~84.7	49~84.7	63~84.7		53~84.7	52~84.7	52~84.7	62~84.7	77~84.7	59~84.7	59~84.7	60~84.7	62~84.7		64~84.7	65~84.7	63~84.7	65~84.7	77~84.7	49~84.7	49~84.7	48~84.7	63~84.7	78~84.7	[DEG]
	1	1	1	1		1	1	1	1	1	1	1	1	1		1	1	1	1	1	1	1	1	1	1	
	8.7t	8.7t	8.7t	8.7t		8.7t	8.7t	8.7t	8.7t	8.7t	8.7t	8.7t	8.7t	8.7t		8.7t	8.7t	8.7t	8.7t	8.7t	8.7t	8.7t	8.7t	8.7t	8.7t	

FLJ	1.6m + 17.4m	9.6 t	8.0m x 6.2m	360 °	JPN

m	41.2	41.2	41.2	41.2	41.2	44.9	44.9	44.9	44.9	44.9	44.9	44.9	44.9	44.9	44.9	48.6	48.6	48.6	48.6	48.6	48.6	48.6	48.6	48.6	48.6	m
°	5	15	30	45	60	5	15	30	45	60	5	15	30	45	60	5	15	30	45	60	5	15	30	45	60	°
3.0																										3.0
3.5																										3.5
4.0																										4.0
4.5																										4.5
5.0																										5.0
6.0																										6.0
7.0																										7.0
8.0																										8.0
9.0																										9.0
10.0	2.7										2.4															10.0
11.0	2.7					1.9					2.4					2.0					2.2					11.0
12.0	2.7					1.9					2.4					2.0					2.2					12.0
14.0	2.7	2.7				1.9	1.9				2.4	2.4				2.0	2.0				2.2	2.2				14.0
16.0	2.7	2.7				1.9	1.9				2.4	2.4				2.0	2.0				2.2	2.2				16.0
18.0	2.7	2.6	2.1			1.9	1.9	1.9			2.4	2.4	2.1			2.0	2.0				2.2	2.2				18.0
20.0	2.7	2.5	2.1	1.8		1.9	1.9	1.9			2.4	2.4	2.0			2.0	2.0	2.0			2.2	2.2	2.0			20.0
22.0	2.7	2.4	2.0	1.8	1.5	1.9	1.9	1.9	1.7		2.4	2.4	2.0	1.7		2.0	2.0	1.9	1.7		2.2	2.2	1.9	1.7		22.0
24.0	2.6	2.3	1.9	1.7	1.5	1.9	1.9	1.8	1.7	1.5	2.4	2.2	1.9	1.7	1.5	2.0	2.0	1.9	1.7	1.5	2.2	2.2	1.9	1.7	1.5	24.0
26.0	2.1	2.2	1.8	1.7		1.9	1.9	1.8	1.6	1.5	2.1	2.2	1.8	1.7	1.5	2.0	2.0	1.8	1.6	1.5	2.2	2.1	1.8	1.6	1.5	26.0
28.0		1.9	1.8	1.6		1.9	1.9	1.7	1.6			2.0	1.8	1.6		2.0	2.0	1.7	1.6			2.1	1.8	1.6		28.0
30.0			1.7	1.6		1.9	1.9	1.7	1.5				1.7	1.6			1.9	1.7	1.6				1.7	1.6		30.0
32.0				1.6		1.7	1.9	1.6	1.5					1.5				1.6	1.5					1.5		32.0
34.0						1.3	1.6	1.6	1.5									1.5	1.5							34.0
36.0							1.2	1.5	1.5																	36.0
38.0								1.2																		38.0
40.0																										40.0
42.0																										42.0
44.0																										44.0
46.0																										46.0
48.0																										48.0
50.0																										50.0
52.0																										52.0
54.0																										54.0
56.0																										56.0
58.0																										58.0
60.0																										60.0
64.0																										64.0
1	92	92	92	92	92	0	0	0	0	0	92	92	92	92	92	46	46	46	46	46	92	92	92	92	92	1
2	92	92	92	92	92	46	46	46	46	46	92	92	92	92	92	92	92	92	92	92	92	92	92	92	92	2
3	92	92	92	92	92	92	92	92	92	92	92	92	92	92	92	92	92	92	92	92	92	92	92	92	92	3
4	92	92	92	92	92	92	92	92	92	92	92	92	92	92	92	92	92	92	92	92	92	92	92	92	92	4
5	0	0	0	0	0	92	92	92	92	92	46	46	46	46	46	92	92	92	92	92	92	92	92	92	92	5
6	0	0	0	0	0	92	92	92	92	92	0	0	0	0	0	46	46	46	46	46	0	0	0	0	0	6
ID	83	83	83	83	83	26	26	26	26	26	65	65	65	65	65	38	38	38	38	38	49	49	49	49	49	ID
[DEG]	66~84.7	67~84.7	68~84.7	68~84.7	79~84.7	60~84.7	60~84.7	61~84.7	65~84.7	78~84.7	68~84.7	69~84.7	70~84.7	70~84.7	78~84.7	68~84.7	69~84.7	67~84.7	69~84.7	79~84.7	70~84.7	71~84.7	71~84.7	72~84.7	79~84.7	[DEG]
	1	1	1	1	1	1	1	1	1	1	1	1	1	1	1	1	1	1	1	1	1	1	1	1	1	
	8.7t	8.7t	8.7t	8.7t	8.7t	8.7t	8.7t	8.7t	8.7t	8.7t	8.7t	8.7t	8.7t	8.7t	8.7t	8.7t	8.7t	8.7t	8.7t	8.7t	8.7t	8.7t	8.7t	8.7t	8.7t	

m	52.3	52.3	52.3	52.3	52.3	52.3	52.3	52.3	52.3	52.3	56.0	56.0	56.0	56.0	56.0	60.0	60.0	60.0	60.0	60.0						m
°	5	15	30	45	60	5	15	30	45	60	5	15	30	45	60	5	15	30	45	60						°
3.0																										3.0
3.5																										3.5
4.0																										4.0
4.5																										4.5
5.0																										5.0
6.0																										6.0
7.0																										7.0
8.0																										8.0
9.0																										9.0
10.0																										10.0
11.0																										11.0
12.0						2.0																				12.0
14.0	1.8					2.0					1.8															14.0
16.0	1.8	1.8				2.0	2.0				1.8	1.8				1.0										16.0
18.0	1.8	1.8				2.0	2.0				1.8	1.8				1.0	1.0									18.0
20.0	1.8	1.8	1.8			2.0	2.0	2.0			1.8	1.8				1.0	1.0									20.0
22.0	1.8	1.8	1.8			2.0	2.0	1.9			1.8	1.8	1.8			1.0	1.0	1.0								22.0
24.0	1.8	1.8	1.8	1.6		2.0	2.0	1.9	1.7		1.8	1.8	1.8	1.6		1.0	1.0	1.0								24.0
26.0	1.8	1.8	1.8	1.6	1.5	2.0	2.0	1.8	1.6	1.5	1.8	1.8	1.8	1.6	1.5		1.0	1.0	1.0							26.0
28.0	1.8	1.8	1.7	1.6	1.4		2.0	1.7	1.6	1.4		1.8	1.7	1.6	1.4			1.0	1.0	1.0						28.0
30.0		1.8	1.7	1.5				1.7	1.5				1.7	1.5					1.0	1.0						30.0
32.0			1.6	1.5					1.5					1.5												32.0
34.0			1.5	1.5																						34.0
36.0																										36.0
38.0																										38.0
40.0																										40.0
42.0																										42.0
44.0																										44.0
46.0																										46.0
48.0																										48.0
50.0																										50.0
52.0																										52.0
54.0																										54.0
56.0																										56.0
58.0																										58.0
60.0																										60.0
64.0																										64.0
1	46	46	46	46	46	92	92	92	92	92	92	92	92	92	92	100	100	100	100	100						1
2	92	92	92	92	92	92	92	92	92	92	92	92	92	92	92	100	100	100	100	100						2
3	92	92	92	92	92	92	92	92	92	92	92	92	92	92	92	100	100	100	100	100						3
4	92	92	92	92	92	92	92	92	92	92	92	92	92	92	92	100	100	100	100	100						4
5	92	92	92	92	92	92	92	92	92	92	92	92	92	92	92	100	100	100	100	100						5
6	92	92	92	92	92	46	46	46	46	46	92	92	92	92	92	100	100	100	100	100						6
ID	28	28	28	28	28	39	39	39	39	39	29	29	29	29	29	19	19	19	19	19						ID
[DEG]	70~84.7	70~84.7	69~84.7	71~84.7	78~84.7	71~84.7	72~84.7	73~84.7	73~84.7	78~84.7	72~84.7	73~84.7	74~84.7	75~84.7	79~84.7	75~84.7	75~84.7	77~84.7	77~84.7	78~84.7						[DEG]
	1	1	1	1	1	1	1	1	1	1	1	1	1	1	1	1	1	1	1	1						
	8.7t	8.7t	8.7t	8.7t	8.7t	8.7t	8.7t	8.7t	8.7t	8.7t	8.7t	8.7t	8.7t	8.7t	8.7t	8.7t	8.7t	8.7t	8.7t	8.7t						

フルオートラフィングジブ

FLJ	1.6m + 7.4m	9.6 t	8.0m x 5.0m	360 °	JPN

m	11.4	11.4	11.4	11.4	11.4	15.1	15.1	15.1	15.1	15.1	15.1	15.1	15.1	15.1	15.1	15.1	15.1	15.1	15.1	15.1	18.8	18.8	18.8	18.8	18.8	m
°	5	15	30	45	60	5	15	30	45	60	5	15	30	45	60	5	15	30	45	60	5	15	30	45	60	°
3.0	7.3					7.3					7.3					7.3					7.3					3.0
3.5	7.3					7.3					7.3					7.3					7.3					3.5
4.0	7.3	7.3				7.3	7.3				7.3	7.3				7.3	7.3				7.3					4.0
4.5	7.3	7.3				7.3	7.3				7.3	7.3				7.3	7.3				7.3					4.5
5.0	7.3	7.3	7.3			7.3	7.3				7.3	7.3				7.3	7.3				7.3	7.3				5.0
6.0	7.3	7.3	7.3			7.3	7.3	7.3			7.3	7.3	7.3			7.3	7.3	7.3			7.3	7.3	7.3			6.0
7.0	7.3	7.3	7.3	6.5	5.0	7.3	7.3	7.3	6.7		7.3	7.3	7.3	6.7		7.3	7.3	7.3	6.7		7.3	7.3	7.3			7.0
8.0	7.3	7.3	7.3	6.3	4.9	7.3	7.3	7.3	6.5	5.0	7.3	7.3	7.3	6.5	5.0	7.3	7.3	7.3	6.5	5.0	7.3	7.3	7.3	6.6	5.0	8.0
9.0	7.3	7.3	7.2	6.0		7.3	7.3	7.3	6.3	4.9	7.3	7.3	7.3	6.3	4.9	7.3	7.3	7.3	6.3	4.9	7.3	7.3	7.3	6.4	4.9	9.0
10.0	7.3	7.3	6.9	5.9		7.3	7.3	7.3	6.1		7.3	7.3	7.3	6.1		7.3	7.3	7.3	6.1		7.3	7.3	7.3	6.3	4.9	10.0
11.0	7.3	7.3	6.6	5.7		7.3	7.3	7.0	5.9		7.3	7.3	7.0	5.9		7.3	7.3	7.0	5.9		7.3	7.3	7.3	6.1		11.0
12.0	7.3	7.0	6.3			7.3	7.3	6.8	5.8		7.3	7.3	6.8	5.8		7.3	7.3	6.8	5.8		7.3	7.3	7.2	6.0		12.0
14.0	6.4	6.2	5.9			7.3	7.1	6.3			7.3	7.1	6.3			7.2	7.1	6.3			7.3	7.3	6.7	5.7		14.0
16.0	5.7	5.7				5.9	6.1	5.9			5.6	5.9	5.9			5.4	5.6	5.9			6.3	6.5	6.3			16.0
18.0						4.5	4.7				4.3	4.4				4.0	4.2				4.9	5.1	5.3			18.0
20.0						3.5					3.2					3.0					3.8	4.0				20.0
22.0																					3.0	3.1				22.0
24.0																					2.3					24.0
26.0																										26.0
28.0																										28.0
30.0																										30.0
32.0																										32.0
34.0																										34.0
36.0																										36.0
38.0																										38.0
40.0																										40.0
42.0																										42.0
44.0																										44.0
46.0																										46.0
48.0																										48.0
50.0																										50.0
52.0																										52.0
54.0																										54.0
56.0																										56.0
58.0																										58.0
60.0																										60.0
64.0																										64.0
1	0	0	0	0	0	0	0	0	0	0	0	0	0	0	0	0	0	0	0	0	0	0	0	0	0	1
2	0	0	0	0	0	0	0	0	0	0	0	0	0	0	0	46	46	46	46	46	0	0	0	0	0	2
3	0	0	0	0	0	0	0	0	0	0	46	46	46	46	46	0	0	0	0	0	0	0	0	0	0	3
4	0	0	0	0	0	46	46	46	46	46	0	0	0	0	0	0	0	0	0	0	0	0	0	0	0	4
5	0	0	0	0	0	0	0	0	0	0	0	0	0	0	0	0	0	0	0	0	46	46	46	46	46	5
6	0	0	0	0	0	0	0	0	0	0	0	0	0	0	0	0	0	0	0	0	46	46	46	46	46	6
ID	1	1	1	1	1	76	76	76	76	76	105	105	105	105	105	131	131	131	131	131	30	30	30	30	30	ID
[DEG]	0~84.7	0~84.7	0~84.7	0~84.7	0~84.7	24~84.7	37~84.7	48~84.7	64~84.7	75~84.7	24~84.7	37~84.7	48~84.7	64~84.7	75~84.7	24~84.7	37~84.7	48~84.7	64~84.7	75~84.7	21~84.7	33~84.7	50~84.7	63~84.7	75~84.7	[DEG]
	1	1	1	1	1	1	1	1	1	1	1	1	1	1	1	1	1	1	1	1	1	1	1	1	1	
	8.7t	8.7t	8.7t	8.7t	8.7t	8.7t	8.7t	8.7t	8.7t	8.7t	8.7t	8.7t	8.7t	8.7t	8.7t	8.7t	8.7t	8.7t	8.7t	8.7t	8.7t	8.7t	8.7t	8.7t	8.7t	

m	18.8	18.8	18.8	18.8	18.8	18.8	18.8	18.8	18.8	18.8	18.8	18.8	18.8	18.8	18.8	22.6	22.6	22.6	22.6	22.6	26.3	26.3	26.3	26.3	26.3	m
°	5	15	30	45	60	5	15	30	45	60	5	15	30	45	60	5	15	30	45	60	5	15	30	45	60	°
3.0	7.3					7.3					7.3															3.0
3.5	7.3					7.3					7.3															3.5
4.0	7.3					7.3	7.3				7.3	7.3				7.3										4.0
4.5	7.3					7.3	7.3				7.3	7.3				7.3										4.5
5.0	7.3	7.3				7.3	7.3				7.3	7.3				7.3	7.3				7.3					5.0
6.0	7.3	7.3	7.3			7.3	7.3	7.3			7.3	7.3	7.3			7.3	7.3				7.3	7.3				6.0
7.0	7.3	7.3	7.3	6.9		7.3	7.3	7.3	6.9		7.3	7.3	7.3	6.9		7.3	7.3	7.3			7.3	7.3				7.0
8.0	7.3	7.3	7.3	6.6	5.0	7.3	7.3	7.3	6.6	5.0	7.3	7.3	7.3	6.6	5.0	7.3	7.3	7.3	6.8		7.3	7.3	7.3			8.0
9.0	7.3	7.3	7.3	6.4	4.9	7.3	7.3	7.3	6.4	4.9	7.3	7.3	7.3	6.4	4.9	7.3	7.3	7.3	6.6	5.0	7.3	7.3	7.3	6.7	5.0	9.0
10.0	7.3	7.3	7.3	6.3	4.9	7.3	7.3	7.3	6.3	4.9	7.3	7.3	7.3	6.3	4.9	7.3	7.3	7.3	6.4	4.9	7.3	7.3	7.3	6.5	4.9	10.0
11.0	7.3	7.3	7.3	6.1		7.3	7.3	7.3	6.1		7.3	7.3	7.3	6.1		7.3	7.3	7.3	6.3	4.8	7.3	7.3	7.3	6.4	4.9	11.0
12.0	7.3	7.3	7.2	6.0		7.3	7.3	7.2	6.0		7.3	7.3	7.2	6.0		7.3	7.3	7.3	6.1		7.3	7.3	7.3	6.3	4.8	12.0
14.0	7.3	7.3	6.7	5.7		7.3	7.3	6.7	5.7		7.0	7.3	6.7	5.7		7.2	6.9	6.5	5.9		5.5	6.0	6.7	6.0		14.0
16.0	6.0	6.2	6.3			5.6	5.9	6.2			5.2	5.5	5.8			6.4	6.1	5.9	5.7		3.7	4.1	4.7	5.1		16.0
18.0	4.6	4.8	5.0			4.2	4.4	4.7			3.8	4.0	4.3			5.1	5.3	5.3			2.4	2.7	3.2	3.5		18.0
20.0	3.5	3.7				3.2	3.3				2.8	2.9				4.0	4.2	4.4			1.4	1.7	2.0			20.0
22.0	2.7	2.8				2.3	2.4				1.9	2.1				3.1	3.3	3.4					1.1			22.0
24.0	2.0					1.7					1.3					2.5	2.6									24.0
26.0																1.9	2.0									26.0
28.0																										28.0
30.0																										30.0
32.0																										32.0
34.0																										34.0
36.0																										36.0
38.0																										38.0
40.0																										40.0
42.0																										42.0
44.0																										44.0
46.0																										46.0
48.0																										48.0
50.0																										50.0
52.0																										52.0
54.0																										54.0
56.0																										56.0
58.0																										58.0
60.0																										60.0
64.0																										64.0
1	0	0	0	0	0	0	0	0	0	0	0	0	0	0	0	0	0	0	0	0	92	92	92	92	92	1
2	0	0	0	0	0	0	0	0	0	0	46	46	46	46	46	0	0	0	0	0	92	92	92	92	92	2
3	0	0	0	0	0	46	46	46	46	46	46	46	46	46	46	0	0	0	0	0	0	0	0	0	0	3
4	46	46	46	46	46	46	46	46	46	46	0	0	0	0	0	0	0	0	0	0	0	0	0	0	0	4
5	46	46	46	46	46	0	0	0	0	0	0	0	0	0	0	46	46	46	46	46	0	0	0	0	0	5
6	0	0	0	0	0	0	0	0	0	0	0	0	0	0	0	92	92	92	92	92	0	0	0	0	0	6
ID	58	58	58	58	58	88	88	88	88	88	113	113	113	113	113	20	20	20	20	20	134	134	134	134	134	ID
[DEG]	20~84.7	32~84.7	50~84.7	63~84.7	75~84.7	20~84.7	32~84.7	50~84.7	63~84.7	75~84.7	20~84.7	32~84.7	49~84.7	63~84.7	75~84.7	28~84.7	30~84.7	46~84.7	63~84.7	76~84.7	53~84.7	54~84.7	52~84.7	62~84.7	76~84.7	[DEG]
	1	1	1	1	1	1	1	1	1	1	1	1	1	1	1	1	1	1	1	1	1	1	1	1	1	
	8.7t	8.7t	8.7t	8.7t	8.7t	8.7t	8.7t	8.7t	8.7t	8.7t	8.7t	8.7t	8.7t	8.7t	8.7t	8.7t	8.7t	8.7t	8.7t	8.7t	8.7t	8.7t	8.7t	8.7t	8.7t	

FLJ	1.6m + 7.4m	9.6 t	8.0m x 5.0m	360 °	JPN

m	30.0	30.0	30.0	30.0	30.0	30.0	30.0	30.0	30.0	30.0	33.7	33.7	33.7	33.7	33.7	37.4	37.4	37.4	37.4	37.4	37.4	37.4	37.4	37.4	37.4	m
°	5	15	30	45	60	5	15	30	45	60	5	15	30	45	60	5	15	30	45	60	5	15	30	45	60	°
3.0																										3.0
3.5																										3.5
4.0																										4.0
4.5																										4.5
5.0	7.3					7.3																				5.0
6.0	7.3	7.3				7.3	7.3				7.3															6.0
7.0	7.3	7.3				7.3	7.3				7.3	7.3				7.1					7.3					7.0
8.0	7.3	7.3	7.3			7.3	7.3	7.3			7.3	7.3				7.1	7.1				7.3	7.3				8.0
9.0	7.3	7.3	7.3			7.3	7.3	7.3	6.8		7.3	7.3	7.3			7.1	7.1				7.3	7.3				9.0
10.0	7.3	7.3	7.3	6.6	5.0	7.3	7.3	7.3	6.6	5.0	7.3	7.3	7.3	6.7		7.1	7.1	7.1			7.3	7.3	7.3			10.0
11.0	7.3	7.3	7.3	6.5	4.9	7.3	7.3	7.3	6.5	4.9	7.3	7.3	7.3	6.6	4.9	7.1	7.1	7.1	6.7	5.0	7.3	7.3	7.2	6.7		11.0
12.0	7.3	7.3	7.1	6.4	4.9	7.3	7.3	7.3	6.4	4.9	7.3	7.3	7.3	6.5	4.9	7.1	7.1	7.1	6.6	4.9	7.3	7.3	6.9	6.4	4.9	12.0
14.0	6.8	6.6	6.3	6.1		5.5	6.0	6.7	6.1		5.5	6.0	6.8	6.2	4.8	5.6	6.2	6.9	6.3	4.8	6.9	6.6	6.2	5.9	4.8	14.0
16.0	6.0	5.8	5.6	5.5		3.7	4.2	4.7	5.2		3.7	4.2	4.8	5.2		3.8	4.3	4.9	5.4		6.1	5.9	5.7	5.5		16.0
18.0	5.0	5.2	5.1	5.0		2.4	2.8	3.2	3.6		2.4	2.8	3.3	3.6		2.5	2.9	3.4	3.8		4.7	4.9	5.2	5.0		18.0
20.0	3.9	4.1	4.3	4.5			1.7	2.1	2.3				2.1	2.4				2.2	2.6		3.6	3.8	4.1	4.4		20.0
22.0	3.0	3.2	3.4																		2.8	3.0	3.2	3.4		22.0
24.0	2.4	2.5	2.7																		2.1	2.2	2.5	2.6		24.0
26.0	1.8	1.9	2.0																		1.5	1.6	1.8			26.0
28.0	1.3	1.4																			1.0	1.1	1.3			28.0
30.0	0.9	1.0																								30.0
32.0																										32.0
34.0																										34.0
36.0																										36.0
38.0																										38.0
40.0																										40.0
42.0																										42.0
44.0																										44.0
46.0																										46.0
48.0																										48.0
50.0																										50.0
52.0																										52.0
54.0																										54.0
56.0																										56.0
58.0																										58.0
60.0																										60.0
64.0																										64.0
1	0	0	0	0	0	92	92	92	92	92	92	92	92	92	92	92	92	92	92	92	0	0	0	0	0	1
2	0	0	0	0	0	92	92	92	92	92	92	92	92	92	92	92	92	92	92	92	0	0	0	0	0	2
3	0	0	0	0	0	46	46	46	46	46	92	92	92	92	92	92	92	92	92	92	46	46	46	46	46	3
4	46	46	46	46	46	0	0	0	0	0	0	0	0	0	0	46	46	46	46	46	92	92	92	92	92	4
5	92	92	92	92	92	0	0	0	0	0	0	0	0	0	0	0	0	0	0	0	92	92	92	92	92	5
6	92	92	92	92	92	0	0	0	0	0	0	0	0	0	0	0	0	0	0	0	92	92	92	92	92	6
ID	22	22	22	22	22	116	116	116	116	116	110	110	110	110	110	93	93	93	93	93	24	24	24	24	24	ID
[DEG]	36~84.7	38~84.7	49~84.7	63~84.7	78~84.7	61~84.7	59~84.7	61~84.7	62~84.7	78~84.7	64~84.7	65~84.7	64~84.7	65~84.7	76~84.7	66~84.7	68~84.7	67~84.7	68~84.7	78~84.7	52~84.7	53~84.7	55~84.7	62~84.7	78~84.7	[DEG]
	1	1	1	1	1	1	1	1	1	1	1	1	1	1	1	1	1	1	1	1	1	1	1	1	1	
	8.7t	8.7t	8.7t	8.7t	8.7t	8.7t	8.7t	8.7t	8.7t	8.7t	8.7t	8.7t	8.7t	8.7t	8.7t	8.7t	8.7t	8.7t	8.7t	8.7t	8.7t	8.7t	8.7t	8.7t	8.7t	

m	41.2	41.2	41.2	41.2	41.2	44.9	44.9	44.9	44.9	44.9	44.9	44.9	44.9	44.9	44.9	48.6	48.6	48.6	48.6	48.6	48.6	48.6	48.6	48.6	48.6	m
°	5	15	30	45	60	5	15	30	45	60	5	15	30	45	60	5	15	30	45	60	5	15	30	45	60	°
3.0																										3.0
3.5																										3.5
4.0																										4.0
4.5																										4.5
5.0																										5.0
6.0																										6.0
7.0	7.3																									7.0
8.0	7.3										6.5															8.0
9.0	7.3	7.3				4.6					6.5					4.8					5.4					9.0
10.0	7.3	7.3	7.3			4.6	4.6				6.5	6.5				4.8					5.4					10.0
11.0	7.3	7.3	7.3			4.6	4.6				6.5	6.5	6.5			4.8	4.8				5.4	5.4				11.0
12.0	7.3	7.3	7.3	6.6	4.9	4.6	4.6	4.6			6.5	6.5	6.5			4.8	4.8	4.8			5.4	5.4	5.4			12.0
14.0	5.7	6.3	7.0	6.4	4.9	4.6	4.6	4.6	4.6	4.6	5.9	6.4	6.5	6.5	4.9	4.8	4.8	4.8	4.8	4.8	5.4	5.4	5.4	5.4	4.9	14.0
16.0	3.9	4.4	5.0	5.5		4.6	4.6	4.6	4.6	4.6	4.1	4.6	5.2	5.7	4.8	4.8	4.8	4.8	4.8	4.8	4.3	4.7	5.3	5.4	4.8	16.0
18.0		3.0	3.5	3.9		4.2	4.5	4.6	4.6			3.2	3.7	4.1		3.5	3.9	4.3	4.7			3.3	3.8	4.2		18.0
20.0				2.7		3.2	3.4	3.8	4.0					2.9		2.5	2.8	3.2	3.5					3.0		20.0
22.0						2.3	2.6	2.9	3.1									2.2	2.5							22.0
24.0						1.7	1.9	2.1	2.3																	24.0
26.0								1.5	1.6																	26.0
28.0																										28.0
30.0																										30.0
32.0																										32.0
34.0																										34.0
36.0																										36.0
38.0																										38.0
40.0																										40.0
42.0																										42.0
44.0																										44.0
46.0																										46.0
48.0																										48.0
50.0																										50.0
52.0																										52.0
54.0																										54.0
56.0																										56.0
58.0																										58.0
60.0																										60.0
64.0																										64.0
1	92	92	92	92	92	0	0	0	0	0	92	92	92	92	92	46	46	46	46	46	92	92	92	92	92	1
2	92	92	92	92	92	46	46	46	46	46	92	92	92	92	92	92	92	92	92	92	92	92	92	92	92	2
3	92	92	92	92	92	92	92	92	92	92	92	92	92	92	92	92	92	92	92	92	92	92	92	92	92	3
4	92	92	92	92	92	92	92	92	92	92	92	92	92	92	92	92	92	92	92	92	92	92	92	92	92	4
5	0	0	0	0	0	92	92	92	92	92	46	46	46	46	46	92	92	92	92	92	92	92	92	92	92	5
6	0	0	0	0	0	92	92	92	92	92	0	0	0	0	0	46	46	46	46	46	0	0	0	0	0	6
ID	83	83	83	83	83	26	26	26	26	26	65	65	65	65	65	38	38	38	38	38	49	49	49	49	49	ID
[DEG]	71~84.7	70~84.7	72~84.7	70~84.7	79~84.7	64~84.7	65~84.7	64~84.7	65~84.7	78~84.7	73~84.7	72~84.7	74~84.7	72~84.7	78~84.7	70~84.7	71~84.7	70~84.7	72~84.7	79~84.7	74~84.7	73~84.7	75~84.7	74~84.7	79~84.7	[DEG]
	1	1	1	1	1	1	1	1	1	1	1	1	1	1	1	1	1	1	1	1	1	1	1	1	1	
	8.7t	8.7t	8.7t	8.7t	8.7t	8.7t	8.7t	8.7t	8.7t	8.7t	8.7t	8.7t	8.7t	8.7t	8.7t	8.7t	8.7t	8.7t	8.7t	8.7t	8.7t	8.7t	8.7t	8.7t	8.7t	

フルオートラフィングジブ

FLJ	1.6m + 7.4m	9.6 t	8.0m x 5.0m	360 °	JPN

m	52.3	52.3	52.3	52.3	52.3	52.3	52.3	52.3	52.3	52.3	56.0	56.0	56.0	56.0	56.0	60.0	60.0	60.0	60.0	60.0						m
°	5	15	30	45	60	5	15	30	45	60	5	15	30	45	60	5	15	30	45	60						°
3.0																										3.0
3.5																										3.5
4.0																										4.0
4.5																										4.5
5.0																										5.0
6.0																										6.0
7.0																										7.0
8.0																										8.0
9.0																										9.0
10.0	3.9					4.4																				10.0
11.0	3.9					4.4					3.7															11.0
12.0	3.9	3.9				4.4	4.4				3.7															12.0
14.0	3.9	3.9	3.9			4.4	4.4	4.4			3.7	3.7	3.7			3.2	3.2									14.0
16.0	3.9	3.9	3.9	3.9	3.9	4.4	4.4	4.4	4.4	4.4	3.7	3.7	3.7	3.7	3.7	3.2	3.2	3.2	3.2							16.0
18.0	3.7	3.9	3.9	3.9	3.9		3.5	4.0	4.4	4.4		3.7	3.7	3.7	3.7			3.2	3.2	3.2						18.0
20.0	2.6	2.9	3.3	3.6					3.2					3.3						3.2						20.0
22.0			2.4	2.7																						22.0
24.0																										24.0
26.0																										26.0
28.0																										28.0
30.0																										30.0
32.0																										32.0
34.0																										34.0
36.0																										36.0
38.0																										38.0
40.0																										40.0
42.0																										42.0
44.0																										44.0
46.0																										46.0
48.0																										48.0
50.0																										50.0
52.0																										52.0
54.0																										54.0
56.0																										56.0
58.0																										58.0
60.0																										60.0
64.0																										64.0
% 1	46	46	46	46	46	92	92	92	92	92	92	92	92	92	92	100	100	100	100	100						1
% 2	92	92	92	92	92	92	92	92	92	92	92	92	92	92	92	100	100	100	100	100						2
% 3	92	92	92	92	92	92	92	92	92	92	92	92	92	92	92	100	100	100	100	100						3
% 4	92	92	92	92	92	92	92	92	92	92	92	92	92	92	92	100	100	100	100	100						4
% 5	92	92	92	92	92	92	92	92	92	92	92	92	92	92	92	100	100	100	100	100						5
% 6	92	92	92	92	92	46	46	46	46	46	92	92	92	92	92	100	100	100	100	100						6
ID	28	28	28	28	28	39	39	39	39	39	29	29	29	29	29	19	19	19	19	19						ID
[DEG]	72~84.7	73~84.7	72~84.7	73~84.7	78~84.7	76~84.7	75~84.7	76~84.7	75~84.7	78~84.7	77~84.7	76~84.7	78~84.7	77~84.7	79~84.7	78~84.7	79~84.7	79~84.7	80~84.7	79~84.7						[DEG]
	1	1	1	1	1	1	1	1	1	1	1	1	1	1	1	1	1	1	1	1						
	8.7t	8.7t	8.7t	8.7t	8.7t	8.7t	8.7t	8.7t	8.7t	8.7t	8.7t	8.7t	8.7t	8.7t	8.7t	8.7t	8.7t	8.7t	8.7t	8.7t						

FLJ	1.6m + 12.4m	9.6 t	8.0m x 5.0m	360 °	JPN

m	11.4	11.4	11.4	11.4	11.4	15.1	15.1	15.1	15.1	15.1	15.1	15.1	15.1	15.1	15.1	15.1	15.1	15.1	15.1	15.1	18.8	18.8	18.8	18.8	18.8	m
°	5	15	30	45	60	5	15	30	45	60	5	15	30	45	60	5	15	30	45	60	5	15	30	45	60	°
3.0	4.3																									3.0
3.5	4.3																									3.5
4.0	4.3					4.3					4.3					4.3					4.3					4.0
4.5	4.3					4.3					4.3					4.3					4.3					4.5
5.0	4.3					4.3					4.3					4.3					4.3					5.0
6.0	4.3	4.3				4.3	4.3				4.3	4.3				4.3	4.3				4.3					6.0
7.0	4.3	4.3				4.3	4.3				4.3	4.3				4.3	4.3				4.3	4.3				7.0
8.0	4.3	4.3				4.3	4.3				4.3	4.3				4.3	4.3				4.3	4.3				8.0
9.0	4.3	4.3	4.3			4.3	4.3	4.3			4.3	4.3	4.3			4.3	4.3	4.3			4.3	4.3				9.0
10.0	4.3	4.3	4.1			4.3	4.3	4.3			4.3	4.3	4.3			4.3	4.3	4.3			4.3	4.3	4.3			10.0
11.0	4.3	4.3	3.9	3.2		4.3	4.3	4.1	3.3		4.3	4.3	4.1	3.3		4.3	4.3	4.1	3.3		4.3	4.3	4.1			11.0
12.0	4.3	4.3	3.7	3.1		4.3	4.3	3.9	3.2		4.3	4.3	3.9	3.2		4.3	4.3	3.9	3.2		4.3	4.3	3.9	3.3		12.0
14.0	4.3	4.0	3.3	2.9		4.3	4.3	3.5	3.0		4.3	4.3	3.5	3.0		4.3	4.3	3.5	3.0		4.3	4.3	3.7	3.1		14.0
16.0	3.8	3.5	3.0	2.7		4.3	3.9	3.3	2.8		4.3	3.9	3.3	2.8		4.3	3.9	3.3	2.8		4.3	4.1	3.4	2.9		16.0
18.0	3.4	3.2	2.8			3.9	3.6	3.0	2.7		3.9	3.6	3.0	2.7		3.9	3.6	3.0	2.7		4.3	3.8	3.2	2.8		18.0
20.0	3.0	2.9				3.5	3.3	2.9			3.5	3.3	2.9			3.5	3.3	2.9			4.0	3.5	3.0	2.7		20.0
22.0	2.7					3.2	3.0				3.2	3.0				3.1	3.0				3.6	3.3	2.9			22.0
24.0						2.8	2.8				2.6	2.8				2.4	2.6				3.0	3.1	2.8			24.0
26.0																					2.5	2.6				26.0
28.0																					2.0					28.0
30.0																										30.0
32.0																										32.0
34.0																										34.0
36.0																										36.0
38.0																										38.0
40.0																										40.0
42.0																										42.0
44.0																										44.0
46.0																										46.0
48.0																										48.0
50.0																										50.0
52.0																										52.0
54.0																										54.0
56.0																										56.0
58.0																										58.0
60.0																										60.0
64.0																										64.0
% 1	0	0	0	0		0	0	0	0		0	0	0	0		0	0	0	0		0	0	0	0		1
% 2	0	0	0	0		0	0	0	0		0	0	0	0		46	46	46	46		0	0	0	0		2
% 3	0	0	0	0		0	0	0	0		46	46	46	46		0	0	0	0		0	0	0	0		3
% 4	0	0	0	0		46	46	46	46		0	0	0	0		0	0	0	0		0	0	0	0		4
% 5	0	0	0	0		0	0	0	0		0	0	0	0		0	0	0	0		46	46	46	46		5
% 6	0	0	0	0		0	0	0	0		0	0	0	0		0	0	0	0		46	46	46	46		6
ID	1	1	1	1		76	76	76	76		105	105	105	105		131	131	131	131		30	30	30	30		ID
[DEG]	0~84.7	0~84.7	0~84.7	0~84.7		29~84.7	32~84.7	51~84.7	60~84.7		29~84.7	31~84.7	51~84.7	60~84.7		29~84.7	31~84.7	51~84.7	60~84.7		26~84.7	37~84.7	46~84.7	60~84.7		[DEG]
	1	1	1	1		1	1	1	1		1	1	1	1		1	1	1	1		1	1	1	1		
	8.7t	8.7t	8.7t	8.7t		8.7t	8.7t	8.7t	8.7t		8.7t	8.7t	8.7t	8.7t		8.7t	8.7t	8.7t	8.7t		8.7t	8.7t	8.7t	8.7t		

FLJ	1.6m + 12.4m	9.6 t	8.0m x 5.0m	360 °	JPN

m	18.8	18.8	18.8	18.8	18.8	18.8	18.8	18.8	18.8	18.8	18.8	18.8	18.8	18.8	18.8	22.6	22.6	22.6	22.6	22.6	26.3	26.3	26.3	26.3	26.3	m
°	5	15	30	45	60	5	15	30	45	60	5	15	30	45	60	5	15	30	45	60	5	15	30	45	60	°
m 3.0																										3.0
3.5																										3.5
4.0	4.3					4.3					4.3															4.0
4.5	4.3					4.3					4.3															4.5
5.0	4.3					4.3					4.3					4.3										5.0
6.0	4.3					4.3					4.3					4.3					4.3					6.0
7.0	4.3	4.3				4.3	4.3				4.3	4.3				4.3	4.3				4.3					7.0
8.0	4.3	4.3				4.3	4.3				4.3	4.3				4.3	4.3				4.3	4.3				8.0
9.0	4.3	4.3				4.3	4.3				4.3	4.3				4.3	4.3				4.3	4.3				9.0
10.0	4.3	4.3	4.3			4.3	4.3	4.3			4.3	4.3	4.3			4.3	4.3				4.3	4.3				10.0
11.0	4.3	4.3	4.1			4.3	4.3	4.2			4.3	4.3	4.2			4.3	4.3	4.1			4.3	4.3	4.3			11.0
12.0	4.3	4.3	4.0	3.3		4.3	4.3	4.0	3.3		4.3	4.3	4.0	3.3		4.3	4.3	4.0			4.3	4.3	4.2			12.0
14.0	4.3	4.3	3.7	3.1		4.3	4.3	3.7	3.1		4.3	4.3	3.7	3.1		4.3	4.3	3.7	3.1		4.3	4.3	3.9	3.2	2.7	14.0
16.0	4.3	4.1	3.5	2.9		4.3	4.2	3.5	2.9		4.3	4.2	3.5	2.9		4.3	4.2	3.5	3.0		4.3	4.3	3.7	3.0	2.6	16.0
18.0	4.3	3.8	3.2	2.8		4.3	3.8	3.2	2.8		4.3	3.9	3.2	2.8		4.3	3.9	3.3	2.9		3.4	4.0	3.5	2.9		18.0
20.0	4.0	3.6	3.0	2.7		4.0	3.6	3.0	2.7		3.7	3.6	3.0	2.7		4.2	3.7	3.1	2.8		2.4	2.9	3.3	2.8		20.0
22.0	3.5	3.3	2.9			3.2	3.3	2.9			2.9	3.1	2.9			3.8	3.4	3.0			1.6	2.0	2.5	2.7		22.0
24.0	2.8	3.0	2.8			2.5	2.7	2.8			2.2	2.4	2.6			3.1	3.3	2.9				1.2	1.7			24.0
26.0	2.2	2.4				1.9	2.1				1.6	1.8				2.5	2.7	2.8					1.0			26.0
28.0	1.7					1.4					1.1					2.0	2.2									28.0
30.0																1.6	1.7									30.0
32.0																1.2										32.0
34.0																										34.0
36.0																										36.0
38.0																										38.0
40.0																										40.0
42.0																										42.0
44.0																										44.0
46.0																										46.0
48.0																										48.0
50.0																										50.0
52.0																										52.0
54.0																										54.0
56.0																										56.0
58.0																										58.0
60.0																										60.0
64.0																										64.0
% 1	0	0	0	0		0	0	0	0		0	0	0	0		0	0	0	0		92	92	92	92	92	1
2	0	0	0	0		0	0	0	0		46	46	46	46		0	0	0	0		92	92	92	92	92	2
3	0	0	0	0		46	46	46	46		46	46	46	46		0	0	0	0		0	0	0	0	0	3
4	46	46	46	46		46	46	46	46		0	0	0	0		0	0	0	0		0	0	0	0	0	4
5	46	46	46	46		0	0	0	0		0	0	0	0		46	46	46	46		0	0	0	0	0	5
6	0	0	0	0		0	0	0	0		0	0	0	0		92	92	92	92		0	0	0	0	0	6
ID	58	58	58	58		88	88	88	88		113	113	113	113		20	20	20	20		134	134	134	134	134	ID
[DEG]	25~84.7	36~84.7	46~84.7	60~84.7		25~84.7	36~84.7	46~84.7	60~84.7		25~84.7	36~84.7	46~84.7	60~84.7		23~84.7	33~84.7	49~84.7	65~84.7		56~84.7	55~84.7	54~84.7	64~84.7	77~84.7	[DEG]
	1	1	1	1		1	1	1	1		1	1	1	1		1	1	1	1		1	1	1	1	1	
	8.7t	8.7t	8.7t	8.7t		8.7t	8.7t	8.7t	8.7t		8.7t	8.7t	8.7t	8.7t		8.7t	8.7t	8.7t	8.7t		8.7t	8.7t	8.7t	8.7t	8.7t	

m	30.0	30.0	30.0	30.0	30.0	30.0	30.0	30.0	30.0	30.0	33.7	33.7	33.7	33.7	33.7	37.4	37.4	37.4	37.4	37.4	37.4	37.4	37.4	37.4	37.4	m
°	5	15	30	45	60	5	15	30	45	60	5	15	30	45	60	5	15	30	45	60	5	15	30	45	60	°
m 3.0																										3.0
3.5																										3.5
4.0																										4.0
4.5																										4.5
5.0																										5.0
6.0	4.0					4.3																				6.0
7.0	4.0					4.3					4.3					4.1										7.0
8.0	4.0					4.3					4.3					4.1					4.3					8.0
9.0	4.0	4.0				4.3	4.3				4.3	4.3				4.1					4.3					9.0
10.0	4.0	4.0				4.3	4.3				4.3	4.3				4.1	4.1				4.3	4.3				10.0
11.0	4.0	4.0				4.3	4.3	4.3			4.3	4.3				4.1	4.1				4.3	4.3				11.0
12.0	4.0	4.0	4.0			4.3	4.3	4.2			4.3	4.3	4.2			4.1	4.1				4.3	4.3				12.0
14.0	4.0	4.0	3.7	3.2		4.3	4.3	3.9	3.2		4.3	4.3	3.9	3.3		4.1	4.1	3.9			4.3	4.3	3.7			14.0
16.0	4.0	4.0	3.5	3.1		4.3	4.3	3.7	3.1		4.3	4.3	3.7	3.2	2.6	4.1	4.1	3.7	3.2	2.6	4.3	4.3	3.5	3.1		16.0
18.0	4.0	4.0	3.4	3.0		3.4	4.0	3.5	3.0		3.3	3.9	3.6	3.0	2.6	3.3	4.0	3.6	3.1	2.6	4.3	4.1	3.4	3.0		18.0
20.0	4.0	3.8	3.2	2.9		2.3	2.8	3.4	2.9		2.2	2.8	3.4	2.9		2.3	2.8	3.4	3.0		4.2	3.9	3.2	2.9		20.0
22.0	3.6	3.6	3.1	2.8		1.5	1.9	2.5	2.8			1.9	2.5	2.8				2.6	2.9		3.3	3.6	3.1	2.8		22.0
24.0	2.9	3.2	3.0	2.7				1.7	2.0				1.7	2.1					2.2		2.6	2.9	3.0	2.7		24.0
26.0	2.3	2.5	2.8																		2.0	2.3	2.6	2.7		26.0
28.0	1.8	2.0	2.3																		1.5	1.7	2.0	2.2		28.0
30.0	1.4	1.6	1.8																		1.1	1.3	1.6			30.0
32.0	1.1	1.2	1.3																			0.9	1.1			32.0
34.0																										34.0
36.0																										36.0
38.0																										38.0
40.0																										40.0
42.0																										42.0
44.0																										44.0
46.0																										46.0
48.0																										48.0
50.0																										50.0
52.0																										52.0
54.0																										54.0
56.0																										56.0
58.0																										58.0
60.0																										60.0
64.0																										64.0
% 1	0	0	0	0		92	92	92	92		92	92	92	92	92	92	92	92	92	92	0	0	0	0		1
2	0	0	0	0		92	92	92	92		92	92	92	92	92	92	92	92	92	92	0	0	0	0		2
3	0	0	0	0		46	46	46	46		92	92	92	92	92	92	92	92	92	92	46	46	46	46		3
4	46	46	46	46		0	0	0	0		0	0	0	0	0	46	46	46	46	46	92	92	92	92		4
5	92	92	92	92		0	0	0	0		0	0	0	0	0	0	0	0	0	0	92	92	92	92		5
6	92	92	92	92		0	0	0	0		0	0	0	0	0	0	0	0	0	0	92	92	92	92		6
ID	22	22	22	22		116	116	116	116		110	110	110	110	110	93	93	93	93	93	24	24	24	24		ID
[DEG]	42~84.7	44~84.7	46~84.7	64~84.7		59~84.7	62~84.7	62~84.7	64~84.7		65~84.7	65~84.7	65~84.7	67~84.7	77~84.7	67~84.7	70~84.7	70~84.7	69~84.7	79~84.7	54~84.7	53~84.7	56~84.7	64~84.7		[DEG]
	1	1	1	1		1	1	1	1		1	1	1	1	1	1	1	1	1	1	1	1	1	1		
	8.7t	8.7t	8.7t	8.7t		8.7t	8.7t	8.7t	8.7t		8.7t	8.7t	8.7t	8.7t	8.7t	8.7t	8.7t	8.7t	8.7t	8.7t	8.7t	8.7t	8.7t	8.7t		

フルオートラフィングジブ

FLJ	1.6m + 12.4m	9.6 t	8.0m x 5.0m	360 °	JPN

m	41.2	41.2	41.2	41.2	41.2	44.9	44.9	44.9	44.9	44.9	44.9	44.9	44.9	44.9	44.9	48.6	48.6	48.6	48.6	48.6	48.6	48.6	48.6	48.6	48.6	m
°	5	15	30	45	60	5	15	30	45	60	5	15	30	45	60	5	15	30	45	60	5	15	30	45	60	°
3.0																										3.0
3.5																										3.5
4.0																										4.0
4.5																										4.5
5.0																										5.0
6.0																										6.0
7.0																										7.0
8.0	4.3																									8.0
9.0	4.3										4.0															9.0
10.0	4.3					3.0					4.0					3.2					3.6					10.0
11.0	4.3	4.3				3.0					4.0	4.0				3.2					3.6					11.0
12.0	4.3	4.3				3.0	3.0				4.0	4.0				3.2	3.2				3.6	3.6				12.0
14.0	4.3	4.3	3.9			3.0	3.0				4.0	4.0				3.2	3.2				3.6	3.6				14.0
16.0	4.3	4.3	3.7	3.2		3.0	3.0	3.0			4.0	4.0	3.7			3.2	3.2	3.2			3.6	3.6	3.6			16.0
18.0	3.4	4.0	3.5	3.1	2.6	3.0	3.0	3.0	2.9		3.5	4.0	3.5	3.0	2.6	3.2	3.2	3.2	3.0		3.6	3.6	3.5	3.0		18.0
20.0		2.9	3.4	3.0	2.6	3.0	3.0	3.0	2.9			3.0	3.4	2.9	2.6	3.1	3.2	3.2	2.9	2.6		3.1	3.3	2.9	2.6	20.0
22.0			2.6	2.9		2.9	3.0	3.0	2.8				2.7	2.9			2.6	3.2	2.8	2.5			2.8	2.8	2.5	22.0
24.0				2.2		2.2	2.5	2.9	2.7					2.4				2.4	2.7					2.5		24.0
26.0						1.6	1.9	2.3	2.6										2.1							26.0
28.0							1.4	1.7	2.0																	28.0
30.0									1.4																	30.0
32.0																										32.0
34.0																										34.0
36.0																										36.0
38.0																										38.0
40.0																										40.0
42.0																										42.0
44.0																										44.0
46.0																										46.0
48.0																										48.0
50.0																										50.0
52.0																										52.0
54.0																										54.0
56.0																										56.0
58.0																										58.0
60.0																										60.0
64.0																										64.0
1	92	92	92	92	92	0	0	0	0		92	92	92	92	92	46	46	46	46	46	92	92	92	92	92	1
2	92	92	92	92	92	46	46	46	46		92	92	92	92	92	92	92	92	92	92	92	92	92	92	92	2
3	92	92	92	92	92	92	92	92	92		92	92	92	92	92	92	92	92	92	92	92	92	92	92	92	3
4	92	92	92	92	92	92	92	92	92		92	92	92	92	92	92	92	92	92	92	92	92	92	92	92	4
5	0	0	0	0	0	92	92	92	92		46	46	46	46	46	92	92	92	92	92	92	92	92	92	92	5
6	0	0	0	0	0	92	92	92	92		0	0	0	0	0	46	46	46	46	46	0	0	0	0	0	6
ID	83	83	83	83	83	26	26	26	26		65	65	65	65	65	38	38	38	38	38	49	49	49	49	49	ID
[DEG]	72~84.7	72~84.7	72~84.7	71~84.7	78~84.7	65~84.7	64~84.7	67~84.7	66~84.7		73~84.7	73~84.7	74~84.7	73~84.7	79~84.7	73~84.7	73~84.7	73~84.7	73~84.7	78~84.7	75~84.7	75~84.7	75~84.7	75~84.7	78~84.7	[DEG]
	1	1	1	1	1	1	1	1	1		1	1	1	1	1	1	1	1	1	1	1	1	1	1	1	
	8.7t	8.7t	8.7t	8.7t	8.7t	8.7t	8.7t	8.7t	8.7t		8.7t	8.7t	8.7t	8.7t	8.7t	8.7t	8.7t	8.7t	8.7t	8.7t	8.7t	8.7t	8.7t	8.7t	8.7t	

m	52.3	52.3	52.3	52.3	52.3	52.3	52.3	52.3	52.3	52.3	56.0	56.0	56.0	56.0	56.0	60.0	60.0	60.0	60.0	60.0						m
°	5	15	30	45	60	5	15	30	45	60	5	15	30	45	60	5	15	30	45	60						°
3.0																										3.0
3.5																										3.5
4.0																										4.0
4.5																										4.5
5.0																										5.0
6.0																										6.0
7.0																										7.0
8.0																										8.0
9.0																										9.0
10.0																										10.0
11.0	2.7					3.0																				11.0
12.0	2.7					3.0					2.6															12.0
14.0	2.7	2.7				3.0	3.0				2.6	2.6				1.9										14.0
16.0	2.7	2.7	2.7			3.0	3.0	3.0			2.6	2.6				1.9	1.9									16.0
18.0	2.7	2.7	2.7			3.0	3.0	3.0			2.6	2.6	2.6				1.9	1.9								18.0
20.0	2.7	2.7	2.7	2.7	2.6		3.0	3.0	2.9	2.6		2.6	2.6	2.6				1.9	1.9							20.0
22.0		2.7	2.7	2.7	2.5			2.9	2.8	2.5			2.6	2.6	2.5				1.9	1.9						22.0
24.0			2.5	2.7					2.6					2.6	2.5					1.9						24.0
26.0				2.2																						26.0
28.0																										28.0
30.0																										30.0
32.0																										32.0
34.0																										34.0
36.0																										36.0
38.0																										38.0
40.0																										40.0
42.0																										42.0
44.0																										44.0
46.0																										46.0
48.0																										48.0
50.0																										50.0
52.0																										52.0
54.0																										54.0
56.0																										56.0
58.0																										58.0
60.0																										60.0
64.0																										64.0
1	46	46	46	46	46	92	92	92	92	92	92	92	92	92	92	100	100	100	100	100						1
2	92	92	92	92	92	92	92	92	92	92	92	92	92	92	92	100	100	100	100	100						2
3	92	92	92	92	92	92	92	92	92	92	92	92	92	92	92	100	100	100	100	100						3
4	92	92	92	92	92	92	92	92	92	92	92	92	92	92	92	100	100	100	100	100						4
5	92	92	92	92	92	92	92	92	92	92	92	92	92	92	92	100	100	100	100	100						5
6	92	92	92	92	92	46	46	46	46	46	92	92	92	92	92	100	100	100	100	100						6
ID	28	28	28	28	28	39	39	39	39	39	29	29	29	29	29	19	19	19	19	19						ID
[DEG]	74~84.7	74~84.7	75~84.7	74~84.7	79~84.7	76~84.7	76~84.7	76~84.7	76~84.7	79~84.7	77~84.7	77~84.7	78~84.7	78~84.7	79~84.7	79~84.7	79~84.7	80~84.7	80~84.7	79~84.7						[DEG]
	1	1	1	1	1	1	1	1	1	1	1	1	1	1	1	1	1	1	1	1						
	8.7t	8.7t	8.7t	8.7t	8.7t	8.7t	8.7t	8.7t	8.7t	8.7t	8.7t	8.7t	8.7t	8.7t	8.7t	8.7t	8.7t	8.7t	8.7t	8.7t						

FLJ	1.6m + 17.4m	9.6 t	8.0m x 5.0m	360 °	JPN

m	11.4	11.4	11.4	11.4	11.4	15.1	15.1	15.1	15.1	15.1	15.1	15.1	15.1	15.1	15.1	15.1	15.1	15.1	15.1	15.1	18.8	18.8	18.8	18.8	18.8	m
°	5	15	30	45	60	5	15	30	45	60	5	15	30	45	60	5	15	30	45	60	5	15	30	45	60	°
3.0																										3.0
3.5																										3.5
4.0																										4.0
4.5	3.3																									4.5
5.0	3.3					3.1					3.3					3.3										5.0
6.0	3.3					3.1					3.3					3.3					2.7					6.0
7.0	3.3					3.1					3.3					3.3					2.7					7.0
8.0	3.3	3.3				3.1					3.3					3.3					2.7					8.0
9.0	3.3	3.3				3.1	3.1				3.3	3.3				3.3	3.3				2.7	2.7				9.0
10.0	3.3	3.2				3.1	3.1				3.3	3.3				3.3	3.3				2.7	2.7				10.0
11.0	3.3	3.0				3.1	3.1				3.3	3.1				3.3	3.1				2.7	2.7				11.0
12.0	3.2	2.9	2.5			3.1	2.9				3.3	2.9				3.3	3.0				2.7	2.7				12.0
14.0	2.9	2.6	2.3			3.1	2.7	2.3			3.1	2.7	2.3			3.1	2.7	2.3			2.7	2.7	2.3			14.0
16.0	2.6	2.4	2.1	1.8		2.8	2.5	2.2	1.9		2.8	2.5	2.2	1.9		2.8	2.5	2.2	1.9		2.7	2.5	2.2			16.0
18.0	2.4	2.2	1.9	1.7		2.6	2.3	2.0	1.8		2.6	2.3	2.0	1.8		2.6	2.3	2.0	1.8		2.7	2.4	2.0	1.8		18.0
20.0	2.2	2.0	1.8	1.6		2.4	2.1	1.9	1.7		2.4	2.1	1.9	1.7		2.4	2.1	1.9	1.7		2.5	2.2	1.9	1.7		20.0
22.0	2.0	1.9	1.7			2.2	2.0	1.8	1.6		2.2	2.0	1.8	1.6		2.2	2.0	1.8	1.6		2.3	2.1	1.8	1.6		22.0
24.0	1.8	1.7				2.1	1.9	1.7			2.1	1.9	1.7			2.1	1.9	1.7			2.2	2.0	1.8	1.6		24.0
26.0	1.7	1.6				1.9	1.8	1.6			1.9	1.8	1.6			1.9	1.8	1.6			2.0	1.9	1.7			26.0
28.0						1.8	1.6				1.8	1.6				1.8	1.6				1.9	1.8	1.6			28.0
30.0						1.6					1.6					1.6					1.9	1.7				30.0
32.0																					1.7	1.6				32.0
34.0																					1.4					34.0
36.0																										36.0
38.0																										38.0
40.0																										40.0
42.0																										42.0
44.0																										44.0
46.0																										46.0
48.0																										48.0
50.0																										50.0
52.0																										52.0
54.0																										54.0
56.0																										56.0
58.0																										58.0
60.0																										60.0
64.0																										64.0
1	0	0	0	0		0	0	0	0		0	0	0	0		0	0	0	0		0	0	0	0		1
2	0	0	0	0		0	0	0	0		0	0	0	0		46	46	46	46		0	0	0	0		2
3	0	0	0	0		0	0	0	0		46	46	46	46		0	0	0	0		0	0	0	0		3
4	0	0	0	0		46	46	46	46		0	0	0	0		0	0	0	0		0	0	0	0		4
5	0	0	0	0		0	0	0	0		0	0	0	0		0	0	0	0		46	46	46	46		5
6	0	0	0	0		0	0	0	0		0	0	0	0		0	0	0	0		46	46	46	46		6
ID	1	1	1	1		76	76	76	76		105	105	105	105		131	131	131	131		30	30	30	30		ID
[DEG]	0~84.7	0~84.7	0~84.7	0~84.7		23~84.7	36~84.7	47~84.7	63~84.7		23~84.7	36~84.7	47~84.7	63~84.7		23~84.7	36~84.7	47~84.7	63~84.7		21~84.7	33~84.7	49~84.7	63~84.7		[DEG]
	1	1	1	1		1	1	1	1		1	1	1	1		1	1	1	1		1	1	1	1		
	8.7t	8.7t	8.7t	8.7t		8.7t	8.7t	8.7t	8.7t		8.7t	8.7t	8.7t	8.7t		8.7t	8.7t	8.7t	8.7t		8.7t	8.7t	8.7t	8.7t		

m	18.8	18.8	18.8	18.8	18.8	18.8	18.8	18.8	18.8	18.8	18.8	18.8	18.8	18.8	18.8	22.6	22.6	22.6	22.6	22.6	26.3	26.3	26.3	26.3	26.3	m
°	5	15	30	45	60	5	15	30	45	60	5	15	30	45	60	5	15	30	45	60	5	15	30	45	60	°
3.0																										3.0
3.5																										3.5
4.0																										4.0
4.5																										4.5
5.0																										5.0
6.0	2.9					3.2					3.3					2.5										6.0
7.0	2.9					3.2					3.3					2.5					3.3					7.0
8.0	2.9					3.2					3.3					2.5					3.3					8.0
9.0	2.9	2.9				3.2	3.2				3.3	3.3				2.5					3.3					9.0
10.0	2.9	2.9				3.2	3.2				3.3	3.3				2.5	2.5				3.3	3.3				10.0
11.0	2.9	2.9				3.2	3.2				3.3	3.2				2.5	2.5				3.3	3.3				11.0
12.0	2.9	2.9				3.2	3.0				3.3	3.0				2.5	2.5				3.3	3.2				12.0
14.0	2.9	2.8	2.3			3.2	2.8	2.3			3.2	2.8	2.3			2.5	2.5	2.3			3.3	2.9	2.4			14.0
16.0	2.9	2.5	2.2	1.9		2.9	2.6	2.2	1.9		3.0	2.6	2.2	1.9		2.5	2.5	2.2			3.2	2.7	2.2			16.0
18.0	2.7	2.4	2.1	1.8		2.7	2.4	2.1	1.8		2.7	2.4	2.1	1.8		2.5	2.4	2.1	1.8		3.0	2.5	2.1	1.9		18.0
20.0	2.5	2.2	1.9	1.7		2.5	2.2	1.9	1.7		2.5	2.2	2.0	1.7		2.5	2.3	1.9	1.7		2.8	2.4	2.0	1.8		20.0
22.0	2.3	2.1	1.9	1.6		2.3	2.1	1.9	1.6		2.4	2.1	1.9	1.6		2.4	2.1	1.9	1.7		2.3	2.3	1.9	1.7		22.0
24.0	2.2	2.0	1.8	1.6		2.2	2.0	1.8	1.6		2.2	2.0	1.8	1.6		2.3	2.0	1.8	1.6		1.6	2.1	1.9	1.6		24.0
26.0	2.1	1.9	1.7			2.1	1.9	1.7			2.1	1.9	1.7			2.1	1.9	1.7	1.5		1.1	1.5	1.8	1.6		26.0
28.0	1.9	1.8	1.6			2.0	1.8	1.6			1.8	1.8	1.6			2.0	1.8	1.7				0.9	1.4	1.5		28.0
30.0	1.9	1.7				1.6	1.7				1.4	1.5				1.9	1.8	1.6					0.9			30.0
32.0	1.5	1.6				1.3	1.4				1.0	1.1				1.7	1.7									32.0
34.0	1.2					0.9										1.4	1.5									34.0
36.0																1.1										36.0
38.0																										38.0
40.0																										40.0
42.0																										42.0
44.0																										44.0
46.0																										46.0
48.0																										48.0
50.0																										50.0
52.0																										52.0
54.0																										54.0
56.0																										56.0
58.0																										58.0
60.0																										60.0
64.0																										64.0
1	0	0	0	0		0	0	0	0		0	0	0	0		0	0	0	0		92	92	92	92		1
2	0	0	0	0		0	0	0	0		46	46	46	46		0	0	0	0		92	92	92	92		2
3	0	0	0	0		46	46	46	46		46	46	46	46		0	0	0	0		0	0	0	0		3
4	46	46	46	46		46	46	46	46		0	0	0	0		0	0	0	0		0	0	0	0		4
5	46	46	46	46		0	0	0	0		0	0	0	0		46	46	46	46		0	0	0	0		5
6	0	0	0	0		0	0	0	0		0	0	0	0		92	92	92	92		0	0	0	0		6
ID	58	58	58	58		88	88	88	88		113	113	113	113		20	20	20	20		134	134	134	134		ID
[DEG]	20~84.7	32~84.7	49~84.7	63~84.7		20~84.7	32~84.7	49~84.7	63~84.7		29~84.7	32~84.7	49~84.7	63~84.7		27~84.7	37~84.7	51~84.7	63~84.7		55~84.7	55~84.7	55~84.7	62~84.7		[DEG]
	1	1	1	1		1	1	1	1		1	1	1	1		1	1	1	1		1	1	1	1		
	8.7t	8.7t	8.7t	8.7t		8.7t	8.7t	8.7t	8.7t		8.7t	8.7t	8.7t	8.7t		8.7t	8.7t	8.7t	8.7t		8.7t	8.7t	8.7t	8.7t		

フルオートラフィングジブ

FLJ	1.6m + 17.4m	9.6 t	8.0m x 5.0m	360 °	JPN

m	30.0	30.0	30.0	30.0	30.0	30.0	30.0	30.0	30.0	30.0	33.7	33.7	33.7	33.7	33.7	37.4	37.4	37.4	37.4	37.4	37.4	37.4	37.4	37.4	37.4	m
°	5	15	30	45	60	5	15	30	45	60	5	15	30	45	60	5	15	30	45	60	5	15	30	45	60	°
3.0																										3.0
3.5																										3.5
4.0																										4.0
4.5																										4.5
5.0																										5.0
6.0																										6.0
7.0																										7.0
8.0	2.3					3.2					3.1															8.0
9.0	2.3					3.2					3.1					2.4					2.5					9.0
10.0	2.3					3.2					3.1					2.4					2.5					10.0
11.0	2.3	2.3				3.2	3.2				3.1					2.4					2.5					11.0
12.0	2.3	2.3				3.2	3.2				3.1	3.1				2.4	2.4				2.5					12.0
14.0	2.3	2.3				3.2	2.9				3.1	3.0				2.4	2.4				2.5	2.5				14.0
16.0	2.3	2.3	2.2			3.2	2.8	2.3			3.1	2.8	2.3			2.4	2.4	2.2			2.5	2.5				16.0
18.0	2.3	2.3	2.1			3.1	2.6	2.2	1.9		3.1	2.6	2.2			2.4	2.4	2.2			2.5	2.5	2.1			18.0
20.0	2.3	2.3	2.0	1.8		2.9	2.4	2.1	1.8	1.5	2.9	2.5	2.1	1.8		2.4	2.4	2.1	1.8		2.5	2.4	2.0	1.8		20.0
22.0	2.3	2.2	1.9	1.7		2.2	2.3	2.0	1.7	1.5	2.1	2.3	2.0	1.8		2.1	2.4	2.0	1.8	1.5	2.5	2.2	1.9	1.7	1.5	22.0
24.0	2.3	2.1	1.8	1.7		1.5	2.0	1.9	1.7			2.0	1.9	1.7			2.0	1.9	1.7	1.5	2.5	2.1	1.8	1.7	1.5	24.0
26.0	2.3	2.0	1.8	1.6			1.4	1.8	1.6				1.8	1.6				1.8	1.7		2.4	2.1	1.8	1.6		26.0
28.0	2.2	1.9	1.7	1.6				1.4	1.6					1.6					1.6		2.0	2.0	1.7	1.6		28.0
30.0	1.9	1.8	1.6	1.5					1.2												1.5	1.8	1.7	1.5		30.0
32.0	1.5	1.7	1.6																		1.2	1.4	1.6	1.5		32.0
34.0	1.2	1.3	1.6																			1.1	1.4	1.5		34.0
36.0		1.0	1.2																				1.0			36.0
38.0																										38.0
40.0																										40.0
42.0																										42.0
44.0																										44.0
46.0																										46.0
48.0																										48.0
50.0																										50.0
52.0																										52.0
54.0																										54.0
56.0																										56.0
58.0																										58.0
60.0																										60.0
64.0																										64.0
1	0	0	0	0		92	92	92	92	92	92	92	92	92		92	92	92	92	92	0	0	0	0	0	1
2	0	0	0	0		92	92	92	92	92	92	92	92	92		92	92	92	92	92	0	0	0	0	0	2
3	0	0	0	0		46	46	46	46	46	92	92	92	92		92	92	92	92	92	46	46	46	46	46	3
4	46	46	46	46		0	0	0	0	0	0	0	0	0		46	46	46	46	46	92	92	92	92	92	4
5	92	92	92	92		0	0	0	0	0	0	0	0	0		0	0	0	0	0	92	92	92	92	92	5
6	92	92	92	92		0	0	0	0	0	0	0	0	0		0	0	0	0	0	92	92	92	92	92	6
ID	22	22	22	22		116	116	116	116	116	110	110	110	110		93	93	93	93	93	24	24	24	24	24	ID
[DEG]	47~84.7	46~84.7	49~84.7	63~84.7		61~84.7	62~84.7	63~84.7	62~84.7	77~84.7	66~84.7	67~84.7	68~84.7	68~84.7		68~84.7	69~84.7	70~84.7	70~84.7	77~84.7	57~84.7	57~84.7	57~84.7	63~84.7	78~84.7	[DEG]
	1	1	1	1		1	1	1	1	1	1	1	1	1		1	1	1	1	1	1	1	1	1	1	
	8.7t	8.7t	8.7t	8.7t		8.7t	8.7t	8.7t	8.7t	8.7t	8.7t	8.7t	8.7t	8.7t		8.7t	8.7t	8.7t	8.7t	8.7t	8.7t	8.7t	8.7t	8.7t	8.7t	

m	41.2	41.2	41.2	41.2	41.2	44.9	44.9	44.9	44.9	44.9	44.9	44.9	44.9	44.9	44.9	48.6	48.6	48.6	48.6	48.6	48.6	48.6	48.6	48.6	48.6	m
°	5	15	30	45	60	5	15	30	45	60	5	15	30	45	60	5	15	30	45	60	5	15	30	45	60	°
3.0																										3.0
3.5																										3.5
4.0																										4.0
4.5																										4.5
5.0																										5.0
6.0																										6.0
7.0																										7.0
8.0																										8.0
9.0																										9.0
10.0	2.7										2.4															10.0
11.0	2.7					1.9					2.4					2.0					2.2					11.0
12.0	2.7					1.9					2.4					2.0					2.2					12.0
14.0	2.7	2.7				1.9	1.9				2.4	2.4				2.0	2.0				2.2	2.2				14.0
16.0	2.7	2.7				1.9	1.9				2.4	2.4				2.0	2.0				2.2	2.2				16.0
18.0	2.7	2.6	2.1			1.9	1.9	1.9			2.4	2.4	2.1			2.0	2.0				2.2	2.2				18.0
20.0	2.7	2.5	2.1	1.8		1.9	1.9	1.9			2.4	2.4	2.0			2.0	2.0	2.0			2.2	2.2	2.0			20.0
22.0		2.4	2.0	1.8	1.5	1.9	1.9	1.9	1.7			2.4	2.0	1.7		2.0	2.0	1.9	1.7			2.2	1.9	1.7		22.0
24.0			1.9	1.7	1.5	1.9	1.9	1.8	1.7	1.5			1.9	1.7	1.5		2.0	1.9	1.7	1.5			1.9	1.7	1.5	24.0
26.0			1.8	1.7		1.9	1.9	1.8	1.6	1.5			1.8	1.7	1.5			1.8	1.6	1.5				1.6	1.5	26.0
28.0				1.6		1.5	1.9	1.7	1.6					1.6				1.7	1.6					1.6		28.0
30.0							1.4	1.7	1.5										1.6							30.0
32.0								1.4	1.5																	32.0
34.0									1.3																	34.0
36.0																										36.0
38.0																										38.0
40.0																										40.0
42.0																										42.0
44.0																										44.0
46.0																										46.0
48.0																										48.0
50.0																										50.0
52.0																										52.0
54.0																										54.0
56.0																										56.0
58.0																										58.0
60.0																										60.0
64.0																										64.0
1	92	92	92	92	92	0	0	0	0	0	92	92	92	92	92	46	46	46	46	46	92	92	92	92	92	1
2	92	92	92	92	92	46	46	46	46	46	92	92	92	92	92	92	92	92	92	92	92	92	92	92	92	2
3	92	92	92	92	92	92	92	92	92	92	92	92	92	92	92	92	92	92	92	92	92	92	92	92	92	3
4	92	92	92	92	92	92	92	92	92	92	92	92	92	92	92	92	92	92	92	92	92	92	92	92	92	4
5	0	0	0	0	0	92	92	92	92	92	46	46	46	46	46	92	92	92	92	92	92	92	92	92	92	5
6	0	0	0	0	0	92	92	92	92	92	0	0	0	0	0	46	46	46	46	46	0	0	0	0	0	6
ID	83	83	83	83	83	26	26	26	26	26	65	65	65	65	65	38	38	38	38	38	49	49	49	49	49	ID
[DEG]	72~84.7	73~84.7	72~84.7	72~84.7	79~84.7	66~84.7	67~84.7	68~84.7	67~84.7	78~84.7	74~84.7	75~84.7	74~84.7	74~84.7	78~84.7	73~84.7	74~84.7	73~84.7	74~84.7	79~84.7	75~84.7	76~84.7	77~84.7	76~84.7	79~84.7	[DEG]
	1	1	1	1	1	1	1	1	1	1	1	1	1	1	1	1	1	1	1	1	1	1	1	1	1	
	8.7t	8.7t	8.7t	8.7t	8.7t	8.7t	8.7t	8.7t	8.7t	8.7t	8.7t	8.7t	8.7t	8.7t	8.7t	8.7t	8.7t	8.7t	8.7t	8.7t	8.7t	8.7t	8.7t	8.7t	8.7t	

FLJ	1.6m + 17.4m	9.6 t	8.0m x 5.0m	360 °	JPN

m	52.3	52.3	52.3	52.3	52.3	52.3	52.3	52.3	52.3	52.3	56.0	56.0	56.0	56.0	56.0	60.0	60.0	60.0	60.0	60.0						m
°	5	15	30	45	60	5	15	30	45	60	5	15	30	45	60	5	15	30	45	60						°
3.0																										3.0
3.5																										3.5
4.0																										4.0
4.5																										4.5
5.0																										5.0
6.0																										6.0
7.0																										7.0
8.0																										8.0
9.0																										9.0
10.0																										10.0
11.0																										11.0
12.0						2.0																				12.0
14.0	1.8					2.0					1.8															14.0
16.0	1.8	1.8				2.0	2.0				1.8	1.8				1.0										16.0
18.0	1.8	1.8				2.0	2.0				1.8	1.8				1.0	1.0									18.0
20.0	1.8	1.8	1.8			2.0	2.0	2.0			1.8	1.8					1.0									20.0
22.0	1.8	1.8	1.8				2.0	1.9				1.8	1.8					1.0								22.0
24.0		1.8	1.8	1.6				1.9	1.7				1.8	1.6				1.0								24.0
26.0			1.8	1.6	1.5				1.6	1.5				1.6	1.5											26.0
28.0			1.7	1.6	1.4					1.4					1.4											28.0
30.0				1.5																						30.0
32.0																										32.0
34.0																										34.0
36.0																										36.0
38.0																										38.0
40.0																										40.0
42.0																										42.0
44.0																										44.0
46.0																										46.0
48.0																										48.0
50.0																										50.0
52.0																										52.0
54.0																										54.0
56.0																										56.0
58.0																										58.0
60.0																										60.0
64.0																										64.0
1	46	46	46	46	46	92	92	92	92	92	92	92	92	92	92	100	100	100								1
2	92	92	92	92	92	92	92	92	92	92	92	92	92	92	92	100	100	100								2
3	92	92	92	92	92	92	92	92	92	92	92	92	92	92	92	100	100	100								3
4	92	92	92	92	92	92	92	92	92	92	92	92	92	92	92	100	100	100								4
5	92	92	92	92	92	92	92	92	92	92	92	92	92	92	92	100	100	100								5
6	92	92	92	92	92	46	46	46	46	46	92	92	92	92	92	100	100	100								6
ID	28	28	28	28	28	39	39	39	39	39	29	29	29	29	29	19	19	19								ID
[DEG]	74~84.7	75~84.7	75~84.7	75~84.7	78~84.7	76~84.7	77~84.7	78~84.7	78~84.7	78~84.7	77~84.7	78~84.7	79~84.7	80~84.7	79~84.7	88~84.7	79~84.7	79~84.7								[DEG]
	1	1	1	1	1	1	1	1	1	1	1	1	1	1	1	1	1	1								
	8.7t	8.7t	8.7t	8.7t	8.7t	8.7t	8.7t	8.7t	8.7t	8.7t	8.7t	8.7t	8.7t	8.7t	8.7t	8.7t	8.7t	8.7t								

FLJ	1.6m + 7.4m	6.2 t	8.0m x 7.5m	360 °	JPN

m	11.4	11.4	11.4	11.4	11.4	15.1	15.1	15.1	15.1	15.1	15.1	15.1	15.1	15.1	15.1	15.1	15.1	15.1	15.1	15.1	18.8	18.8	18.8	18.8	18.8	m
°	5	15	30	45	60	5	15	30	45	60	5	15	30	45	60	5	15	30	45	60	5	15	30	45	60	°
3.0	7.3					7.3					7.3					7.3					7.3					3.0
3.5	7.3					7.3					7.3					7.3					7.3					3.5
4.0	7.3	7.3				7.3	7.3				7.3	7.3				7.3	7.3				7.3					4.0
4.5	7.3	7.3				7.3	7.3				7.3	7.3				7.3	7.3				7.3					4.5
5.0	7.3	7.3	7.3			7.3	7.3				7.3	7.3				7.3	7.3				7.3	7.3				5.0
6.0	7.3	7.3	7.3			7.3	7.3	7.3			7.3	7.3	7.3			7.3	7.3	7.3			7.3	7.3	7.3			6.0
7.0	7.3	7.3	7.3	6.5	5.0	7.3	7.3	7.3	6.7		7.3	7.3	7.3	6.7		7.3	7.3	7.3	6.7		7.3	7.3	7.3			7.0
8.0	7.3	7.3	7.3	6.3	4.9	7.3	7.3	7.3	6.5	5.0	7.3	7.3	7.3	6.5	5.0	7.3	7.3	7.3	6.5	5.0	7.3	7.3	7.3	6.6	5.0	8.0
9.0	7.3	7.3	7.2	6.0		7.3	7.3	7.3	6.3	4.9	7.3	7.3	7.3	6.3	4.9	7.3	7.3	7.3	6.3	4.9	7.3	7.3	7.3	6.4	4.9	9.0
10.0	7.3	7.3	6.9	5.9		7.3	7.3	7.3	6.1		7.3	7.3	7.3	6.1		7.3	7.3	7.3	6.1		7.3	7.3	7.3	6.3	4.9	10.0
11.0	7.3	7.3	6.6	5.7		7.3	7.3	7.0	5.9		7.3	7.3	7.0	5.9		7.3	7.3	7.0	5.9		7.3	7.3	7.3	6.1		11.0
12.0	7.3	7.0	6.3			7.3	7.3	6.8	5.8		7.3	7.3	6.8	5.8		7.3	7.3	6.8	5.8		7.3	7.3	7.2	6.0		12.0
14.0	6.4	6.2	5.9			7.3	7.1	6.3			7.3	7.1	6.3			7.3	7.1	6.3			7.3	7.3	6.7	5.7		14.0
16.0	5.7	5.7				6.8	6.4	5.9			6.8	6.4	5.9			6.8	6.4	5.9			7.3	7.1	6.3			16.0
18.0						6.0	5.9				6.0	5.9				6.0	5.9				7.0	6.6	6.0			18.0
20.0						5.5					5.5					5.2					6.3	6.1				20.0
22.0																					5.1	5.2				22.0
24.0																					4.0					24.0
26.0																										26.0
28.0																										28.0
30.0																										30.0
32.0																										32.0
34.0																										34.0
36.0																										36.0
38.0																										38.0
40.0																										40.0
42.0																										42.0
44.0																										44.0
46.0																										46.0
48.0																										48.0
50.0																										50.0
52.0																										52.0
54.0																										54.0
56.0																										56.0
58.0																										58.0
60.0																										60.0
64.0																										64.0
1	0	0	0	0	0	0	0	0	0	0	0	0	0	0	0	0	0	0	0	0	0	0	0	0	0	1
2	0	0	0	0	0	0	0	0	0	0	0	0	0	0	0	46	46	46	46	46	0	0	0	0	0	2
3	0	0	0	0	0	0	0	0	0	0	46	46	46	46	46	0	0	0	0	0	0	0	0	0	0	3
4	0	0	0	0	0	46	46	46	46	46	0	0	0	0	0	0	0	0	0	0	0	0	0	0	0	4
5	0	0	0	0	0	0	0	0	0	0	0	0	0	0	0	0	0	0	0	0	46	46	46	46	46	5
6	0	0	0	0	0	0	0	0	0	0	0	0	0	0	0	0	0	0	0	0	46	46	46	46	46	6
ID	1	1	1	1	1	76	76	76	76	76	105	105	105	105	105	131	131	131	131	131	30	30	30	30	30	ID
[DEG]	0~84.7	0~84.7	0~84.7	0~84.7	0~84.7	24~84.7	37~84.7	48~84.7	64~84.7	75~84.7	24~84.7	37~84.7	48~84.7	64~84.7	75~84.7	24~84.7	37~84.7	48~84.7	64~84.7	75~84.7	21~84.7	33~84.7	50~84.7	63~84.7	75~84.7	[DEG]
	1	1	1	1	1	1	1	1	1	1	1	1	1	1	1	1	1	1	1	1	1	1	1	1	1	
	8.7t	8.7t	8.7t	8.7t	8.7t	8.7t	8.7t	8.7t	8.7t	8.7t	8.7t	8.7t	8.7t	8.7t	8.7t	8.7t	8.7t	8.7t	8.7t	8.7t	8.7t	8.7t	8.7t	8.7t	8.7t	

フルオートラフィングジブ

FLJ	1.6m + 7.4m	6.2 t	8.0m x 7.5m	360 °	JPN

m	18.8	18.8	18.8	18.8	18.8	18.8	18.8	18.8	18.8	18.8	18.8	18.8	18.8	18.8	18.8	22.6	22.6	22.6	22.6	22.6	26.3	26.3	26.3	26.3	26.3	m
°	5	15	30	45	60	5	15	30	45	60	5	15	30	45	60	5	15	30	45	60	5	15	30	45	60	°
3.0	7.3					7.3					7.3															3.0
3.5	7.3					7.3					7.3															3.5
4.0	7.3					7.3	7.3				7.3	7.3				7.3										4.0
4.5	7.3					7.3	7.3				7.3	7.3				7.3										4.5
5.0	7.3	7.3				7.3	7.3				7.3	7.3				7.3	7.3				7.3					5.0
6.0	7.3	7.3	7.3			7.3	7.3	7.3			7.3	7.3	7.3			7.3	7.3				7.3	7.3				6.0
7.0	7.3	7.3	7.3	6.9		7.3	7.3	7.3	6.9		7.3	7.3	7.3	6.9		7.3	7.3	7.3			7.3	7.3				7.0
8.0	7.3	7.3	7.3	6.6	5.0	7.3	7.3	7.3	6.6	5.0	7.3	7.3	7.3	6.6	5.0	7.3	7.3	7.3	6.8		7.3	7.3	7.3			8.0
9.0	7.3	7.3	7.3	6.4	4.9	7.3	7.3	7.3	6.4	4.9	7.3	7.3	7.3	6.4	4.9	7.3	7.3	7.3	6.6	5.0	7.3	7.3	7.3	6.7	5.0	9.0
10.0	7.3	7.3	7.3	6.3	4.9	7.3	7.3	7.3	6.3	4.9	7.3	7.3	7.3	6.3	4.9	7.3	7.3	7.3	6.4	4.9	7.3	7.3	7.3	6.5	4.9	10.0
11.0	7.3	7.3	7.3	6.1		7.3	7.3	7.3	6.1		7.3	7.3	7.3	6.1		7.3	7.3	7.3	6.3	4.8	7.3	7.3	7.3	6.4	4.9	11.0
12.0	7.3	7.3	7.2	6.0		7.3	7.3	7.2	6.0		7.3	7.3	7.2	6.0		7.3	7.3	7.3	6.1		7.3	7.3	7.3	6.3	4.8	12.0
14.0	7.3	7.3	6.7	5.7		7.3	7.3	6.7	5.7		7.3	7.3	6.7	5.7		7.2	6.9	6.5	5.9		7.3	7.3	7.3	6.0		14.0
16.0	7.3	7.1	6.3			7.3	7.1	6.3			7.3	7.1	6.3			6.4	6.1	5.9	5.7		6.6	7.2	7.0	5.8		16.0
18.0	7.0	6.6	6.0			7.0	6.6	6.0			6.5	6.6	6.0			5.7	5.5	5.3			4.6	5.1	5.7	5.7		18.0
20.0	5.9	6.1				5.5	5.7				4.9	5.1				5.1	5.0	4.9			3.0	3.4	3.9			20.0
22.0	4.7	4.8				4.2	4.3				3.6	3.8				4.6	4.5	4.5			1.8	2.1	2.5			22.0
24.0	3.6					3.2					2.6					4.2	4.1					1.1	1.4			24.0
26.0																3.4	3.5									26.0
28.0																										28.0
30.0																										30.0
32.0																										32.0
34.0																										34.0
36.0																										36.0
38.0																										38.0
40.0																										40.0
42.0																										42.0
44.0																										44.0
46.0																										46.0
48.0																										48.0
50.0																										50.0
52.0																										52.0
54.0																										54.0
56.0																										56.0
58.0																										58.0
60.0																										60.0
64.0																										64.0
1	0	0	0	0	0	0	0	0	0	0	0	0	0	0	0	0	0	0	0	0	92	92	92	92	92	1
2	0	0	0	0	0	0	0	0	0	0	46	46	46	46	46	0	0	0	0	0	92	92	92	92	92	2
3	0	0	0	0	0	46	46	46	46	46	46	46	46	46	46	0	0	0	0	0	0	0	0	0	0	3
4	46	46	46	46	46	46	46	46	46	46	0	0	0	0	0	0	0	0	0	0	0	0	0	0	0	4
5	46	46	46	46	46	0	0	0	0	0	0	0	0	0	0	46	46	46	46	46	0	0	0	0	0	5
6	0	0	0	0	0	0	0	0	0	0	0	0	0	0	0	92	92	92	92	92	0	0	0	0	0	6
ID	58	58	58	58	58	88	88	88	88	88	113	113	113	113	113	20	20	20	20	20	134	134	134	134	134	ID
[DEG]	21~84.7	33~84.7	50~84.7	63~84.7	75~84.7	21~84.7	33~84.7	50~84.7	63~84.7	75~84.7	20~84.7	33~84.7	50~84.7	63~84.7	75~84.7	29~84.7	30~84.7	46~84.7	63~84.7	76~84.7	48~84.7	45~84.7	47~84.7	63~84.7	76~84.7	[DEG]
	1	1	1	1	1	1	1	1	1	1	1	1	1	1	1	1	1	1	1	1	1	1	1	1	1	
	8.7t	8.7t	8.7t	8.7t	8.7t	8.7t	8.7t	8.7t	8.7t	8.7t	8.7t	8.7t	8.7t	8.7t	8.7t	8.7t	8.7t	8.7t	8.7t	8.7t	8.7t	8.7t	8.7t	8.7t	8.7t	

m	30.0	30.0	30.0	30.0	30.0	30.0	30.0	30.0	30.0	30.0	33.7	33.7	33.7	33.7	33.7	37.4	37.4	37.4	37.4	37.4	37.4	37.4	37.4	37.4	37.4	m
°	5	15	30	45	60	5	15	30	45	60	5	15	30	45	60	5	15	30	45	60	5	15	30	45	60	°
3.0																										3.0
3.5																										3.5
4.0																										4.0
4.5																										4.5
5.0	7.3					7.3																				5.0
6.0	7.3	7.3				7.3	7.3				7.3															6.0
7.0	7.3	7.3				7.3	7.3				7.3	7.3				7.1					7.3					7.0
8.0	7.3	7.3	7.3			7.3	7.3	7.3			7.3	7.3				7.1	7.1				7.3	7.3				8.0
9.0	7.3	7.3	7.3			7.3	7.3	7.3	6.8		7.3	7.3	7.3			7.1	7.1				7.3	7.3				9.0
10.0	7.3	7.3	7.3	6.6	5.0	7.3	7.3	7.3	6.6	5.0	7.3	7.3	7.3	6.7		7.1	7.1	7.1			7.3	7.3	7.3			10.0
11.0	7.3	7.3	7.3	6.5	4.9	7.3	7.3	7.3	6.5	4.9	7.3	7.3	7.3	6.6	4.9	7.1	7.1	7.1	6.7	5.0	7.3	7.3	7.2	6.7		11.0
12.0	7.3	7.3	7.1	6.4	4.9	7.3	7.3	7.3	6.4	4.9	7.3	7.3	7.3	6.5	4.9	7.1	7.1	7.1	6.6	4.9	7.3	7.3	6.9	6.4	4.9	12.0
14.0	6.8	6.6	6.3	6.1		7.3	7.3	7.3	6.1		7.3	7.3	7.3	6.2	4.8	7.1	7.1	7.1	6.3	4.8	6.9	6.6	6.2	5.9	4.8	14.0
16.0	6.0	5.8	5.6	5.5		6.6	7.2	7.2	5.9		6.6	7.2	7.3	6.0		6.8	7.1	7.1	6.1		6.1	5.9	5.7	5.5		16.0
18.0	5.3	5.2	5.1	5.0		4.6	5.1	5.7	5.8		4.6	5.1	5.8	5.9		4.7	5.3	5.9	6.0		5.5	5.4	5.2	5.0		18.0
20.0	4.8	4.7	4.6	4.5		3.0	3.4	4.0	4.3		3.0	3.5	4.0	4.4		3.2	3.6	4.2	4.6		5.0	4.9	4.7	4.6		20.0
22.0	4.3	4.3	4.2			1.8	2.2	2.6			1.8	2.2	2.6	2.9		2.0	2.3	2.8	3.1		4.6	4.5	4.3	4.3		22.0
24.0	3.9	3.9	3.8				1.1	1.5				1.1	1.5			1.0	1.3	1.7	2.0		3.7	3.9	4.0	4.0		24.0
26.0	3.2	3.4	3.5																		2.9	3.1	3.3			26.0
28.0	2.5	2.6																			2.1	2.3	2.5			28.0
30.0	1.9	2.0																			1.5	1.7	1.8			30.0
32.0	1.4	1.5																			1.0	1.1	1.3			32.0
34.0	0.9																									34.0
36.0																										36.0
38.0																										38.0
40.0																										40.0
42.0																										42.0
44.0																										44.0
46.0																										46.0
48.0																										48.0
50.0																										50.0
52.0																										52.0
54.0																										54.0
56.0																										56.0
58.0																										58.0
60.0																										60.0
64.0																										64.0
1	0	0	0	0	0	92	92	92	92	92	92	92	92	92	92	92	92	92	92	92	0	0	0	0	0	1
2	0	0	0	0	0	92	92	92	92	92	92	92	92	92	92	92	92	92	92	92	0	0	0	0	0	2
3	0	0	0	0	0	46	46	46	46	46	92	92	92	92	92	92	92	92	92	92	46	46	46	46	46	3
4	46	46	46	46	46	0	0	0	0	0	0	0	0	0	0	46	46	46	46	46	92	92	92	92	92	4
5	92	92	92	92	92	0	0	0	0	0	0	0	0	0	0	0	0	0	0	0	92	92	92	92	92	5
6	92	92	92	92	92	0	0	0	0	0	0	0	0	0	0	0	0	0	0	0	92	92	92	92	92	6
ID	22	22	22	22	22	116	116	116	116	116	110	110	110	110	110	93	93	93	93	93	24	24	24	24	24	ID
[DEG]	24~84.7	32~84.7	50~84.7	63~84.7	78~84.7	53~84.7	51~84.7	53~84.7	62~84.7	78~84.7	58~84.7	56~84.7	57~84.7	62~84.7	76~84.7	58~84.7	59~84.7	61~84.7	62~84.7	78~84.7	45~84.7	46~84.7	48~84.7	63~84.7	78~84.7	[DEG]
	1	1	1	1	1	1	1	1	1	1	1	1	1	1	1	1	1	1	1	1	1	1	1	1	1	
	8.7t	8.7t	8.7t	8.7t	8.7t	8.7t	8.7t	8.7t	8.7t	8.7t	8.7t	8.7t	8.7t	8.7t	8.7t	8.7t	8.7t	8.7t	8.7t	8.7t	8.7t	8.7t	8.7t	8.7t	8.7t	

FLJ	1.6m + 7.4m	6.2 t	8.0m x 7.5m	360 °	JPN

m	41.2	41.2	41.2	41.2	41.2	44.9	44.9	44.9	44.9	44.9	44.9	44.9	44.9	44.9	44.9	48.6	48.6	48.6	48.6	48.6	48.6	48.6	48.6	48.6	48.6	m
°	5	15	30	45	60	5	15	30	45	60	5	15	30	45	60	5	15	30	45	60	5	15	30	45	60	°
3.0																										3.0
3.5																										3.5
4.0																										4.0
4.5																										4.5
5.0																										5.0
6.0																										6.0
7.0	7.3																									7.0
8.0	7.3										6.5															8.0
9.0	7.3	7.3				4.6					6.5					4.8					5.4					9.0
10.0	7.3	7.3	7.3			4.6	4.6				6.5	6.5				4.8					5.4					10.0
11.0	7.3	7.3	7.3			4.6	4.6				6.5	6.5	6.5			4.8	4.8				5.4	5.4				11.0
12.0	7.3	7.3	7.3	6.6	4.9	4.6	4.6	4.6			6.5	6.5	6.5			4.8	4.8	4.8			5.4	5.4	5.4			12.0
14.0	7.3	7.3	7.3	6.4	4.9	4.6	4.6	4.6	4.6	4.6	6.5	6.5	6.5	6.5	4.9	4.8	4.8	4.8	4.8	4.8	5.4	5.4	5.4	5.4	4.9	14.0
16.0	6.9	7.3	7.3	6.2		4.6	4.6	4.6	4.6	4.6	6.5	6.5	6.5	6.3	4.8	4.8	4.8	4.8	4.8	4.8	5.4	5.4	5.4	5.4	4.8	16.0
18.0	4.9	5.4	6.1	6.1		4.6	4.6	4.6	4.6		5.1	5.6	6.3	6.1		4.8	4.8	4.8	4.8		5.3	5.4	5.4	5.4		18.0
20.0	3.3	3.8	4.3	4.7		4.6	4.6	4.6	4.6		3.5	4.0	4.5	5.0		4.5	4.8	4.8	4.8		3.7	4.2	4.7	5.2		20.0
22.0	2.1	2.5	3.0	3.3		4.2	4.5	4.3	4.2		2.3	2.7	3.2	3.5		3.2	3.6	4.0	4.4		2.5	2.9	3.4	3.7		22.0
24.0	1.1	1.4	1.9	2.1		3.2	3.4	3.7	4.0		1.3	1.7	2.1	2.4		2.2	2.5	2.9	3.2		1.5	1.8	2.3	2.6		24.0
26.0			0.9	1.2		2.3	2.5	2.8	3.0				1.2	1.4		1.4	1.7	2.0	2.2				1.4	1.6		26.0
28.0						1.6	1.8	2.1	2.2								0.9	1.2	1.4							28.0
30.0						1.0	1.2	1.4																		30.0
32.0																										32.0
34.0																										34.0
36.0																										36.0
38.0																										38.0
40.0																										40.0
42.0																										42.0
44.0																										44.0
46.0																										46.0
48.0																										48.0
50.0																										50.0
52.0																										52.0
54.0																										54.0
56.0																										56.0
58.0																										58.0
60.0																										60.0
64.0																										64.0
1	92	92	92	92	92	0	0	0	0	0	92	92	92	92	92	46	46	46	46	46	92	92	92	92	92	1
2	92	92	92	92	92	46	46	46	46	46	92	92	92	92	92	92	92	92	92	92	92	92	92	92	92	2
3	92	92	92	92	92	92	92	92	92	92	92	92	92	92	92	92	92	92	92	92	92	92	92	92	92	3
4	92	92	92	92	92	92	92	92	92	92	92	92	92	92	92	92	92	92	92	92	92	92	92	92	92	4
5	0	0	0	0	0	92	92	92	92	92	46	46	46	46	46	92	92	92	92	92	92	92	92	92	92	5
6	0	0	0	0	0	92	92	92	92	92	0	0	0	0	0	46	46	46	46	46	0	0	0	0	0	6
ID	83	83	83	83	83	26	26	26	26	26	65	65	65	65	65	38	38	38	38	38	49	49	49	49	49	ID
[DEG]	61~84.7	62~84.7	61~84.7	62~84.7	79~84.7	56~84.7	57~84.7	59~84.7	62~84.7	78~84.7	63~84.7	65~84.7	64~84.7	65~84.7	78~84.7	63~84.7	62~84.7	64~84.7	64~84.7	79~84.7	66~84.7	67~84.7	66~84.7	67~84.7	79~84.7	[DEG]
	1	1	1	1	1	1	1	1	1	1	1	1	1	1	1	1	1	1	1	1	1	1	1	1	1	
	8.7t	8.7t	8.7t	8.7t	8.7t	8.7t	8.7t	8.7t	8.7t	8.7t	8.7t	8.7t	8.7t	8.7t	8.7t	8.7t	8.7t	8.7t	8.7t	8.7t	8.7t	8.7t	8.7t	8.7t	8.7t	

m	52.3	52.3	52.3	52.3	52.3	52.3	52.3	52.3	52.3	52.3	56.0	56.0	56.0	56.0	56.0	60.0	60.0	60.0	60.0	60.0						m
°	5	15	30	45	60	5	15	30	45	60	5	15	30	45	60	5	15	30	45	60						°
3.0																										3.0
3.5																										3.5
4.0																										4.0
4.5																										4.5
5.0																										5.0
6.0																										6.0
7.0																										7.0
8.0																										8.0
9.0																										9.0
10.0	3.9					4.4																				10.0
11.0	3.9					4.4					3.7															11.0
12.0	3.9	3.9				4.4	4.4				3.7															12.0
14.0	3.9	3.9	3.9			4.4	4.4	4.4			3.7	3.7	3.7			3.2	3.2									14.0
16.0	3.9	3.9	3.9	3.9	3.9	4.4	4.4	4.4	4.4	4.4	3.7	3.7	3.7	3.7	3.7	3.2	3.2	3.2	3.2							16.0
18.0	3.9	3.9	3.9	3.9	3.9	4.4	4.4	4.4	4.4	4.4	3.7	3.7	3.7	3.7	3.7	3.2	3.2	3.2	3.2	3.2						18.0
20.0	3.9	3.9	3.9	3.9		4.0	4.4	4.4	4.4		3.7	3.7	3.7	3.7		3.2	3.2	3.2	3.2	3.2						20.0
22.0	3.5	3.8	3.9	3.9		2.8	3.1	3.6	4.0		3.0	3.3	3.7	3.7		2.9	3.2	3.2	3.2							22.0
24.0	2.4	2.7	3.1	3.4		1.8	2.1	2.5	2.8		2.0	2.3	2.7	3.0			2.2	2.6	3.0							24.0
26.0	1.6	1.9	2.2	2.5				1.6	1.9				1.8	2.1					2.0							26.0
28.0		1.1	1.4	1.7																						28.0
30.0				1.0																						30.0
32.0																										32.0
34.0																										34.0
36.0																										36.0
38.0																										38.0
40.0																										40.0
42.0																										42.0
44.0																										44.0
46.0																										46.0
48.0																										48.0
50.0																										50.0
52.0																										52.0
54.0																										54.0
56.0																										56.0
58.0																										58.0
60.0																										60.0
64.0																										64.0
1	46	46	46	46	46	92	92	92	92	92	92	92	92	92	92	100	100	100	100	100						1
2	92	92	92	92	92	92	92	92	92	92	92	92	92	92	92	100	100	100	100	100						2
3	92	92	92	92	92	92	92	92	92	92	92	92	92	92	92	100	100	100	100	100						3
4	92	92	92	92	92	92	92	92	92	92	92	92	92	92	92	100	100	100	100	100						4
5	92	92	92	92	92	92	92	92	92	92	92	92	92	92	92	100	100	100	100	100						5
6	92	92	92	92	92	46	46	46	46	46	92	92	92	92	92	100	100	100	100	100						6
ID	28	28	28	28	28	39	39	39	39	39	29	29	29	29	29	19	19	19	19	19						ID
[DEG]	66~84.7	64~84.7	66~84.7	64~84.7	78~84.7	68~84.7	69~84.7	68~84.7	69~84.7	78~84.7	70~84.7	71~84.7	70~84.7	71~84.7	79~84.7	73~84.7	72~84.7	74~84.7	73~84.7	79~84.7						[DEG]
	1	1	1	1	1	1	1	1	1	1	1	1	1	1	1	1	1	1	1	1						
	8.7t	8.7t	8.7t	8.7t	8.7t	8.7t	8.7t	8.7t	8.7t	8.7t	8.7t	8.7t	8.7t	8.7t	8.7t	8.7t	8.7t	8.7t	8.7t	8.7t						

フルオートラフィングジブ

FLJ	1.6m + 12.4m	6.2 t	8.0m x 7.5m	360 °	JPN

m	11.4	11.4	11.4	11.4	11.4	15.1	15.1	15.1	15.1	15.1	15.1	15.1	15.1	15.1	15.1	15.1	15.1	15.1	15.1	15.1	18.8	18.8	18.8	18.8	18.8	m
°	5	15	30	45	60	5	15	30	45	60	5	15	30	45	60	5	15	30	45	60	5	15	30	45	60	°
3.0	4.3																									3.0
3.5	4.3																									3.5
4.0	4.3					4.3					4.3					4.3					4.3					4.0
4.5	4.3					4.3					4.3					4.3					4.3					4.5
5.0	4.3					4.3					4.3					4.3					4.3					5.0
6.0	4.3	4.3				4.3	4.3				4.3	4.3				4.3	4.3				4.3					6.0
7.0	4.3	4.3				4.3	4.3				4.3	4.3				4.3	4.3				4.3	4.3				7.0
8.0	4.3	4.3				4.3	4.3				4.3	4.3				4.3	4.3				4.3	4.3				8.0
9.0	4.3	4.3	4.3			4.3	4.3	4.3			4.3	4.3	4.3			4.3	4.3	4.3			4.3	4.3				9.0
10.0	4.3	4.3	4.1			4.3	4.3	4.3			4.3	4.3	4.3			4.3	4.3	4.3			4.3	4.3	4.3			10.0
11.0	4.3	4.3	3.9	3.2		4.3	4.3	4.1	3.3		4.3	4.3	4.1	3.3		4.3	4.3	4.1	3.3		4.3	4.3	4.1			11.0
12.0	4.3	4.3	3.7	3.1		4.3	4.3	3.9	3.2		4.3	4.3	3.9	3.2		4.3	4.3	3.9	3.2		4.3	4.3	3.9	3.3		12.0
14.0	4.3	4.0	3.3	2.9		4.3	4.3	3.5	3.0		4.3	4.3	3.5	3.0		4.3	4.3	3.5	3.0		4.3	4.3	3.7	3.1		14.0
16.0	3.8	3.5	3.0	2.7		4.3	3.9	3.3	2.8		4.3	3.9	3.3	2.8		4.3	3.9	3.3	2.8		4.3	4.1	3.4	2.9		16.0
18.0	3.4	3.2	2.8			3.9	3.6	3.0	2.7		3.9	3.6	3.0	2.7		3.9	3.6	3.0	2.7		4.3	3.8	3.2	2.8		18.0
20.0	3.0	2.9				3.5	3.3	2.9			3.5	3.3	2.9			3.5	3.3	2.9			4.0	3.5	3.0	2.7		20.0
22.0	2.7					3.2	3.0				3.2	3.0				3.2	3.0				3.6	3.3	2.9			22.0
24.0						2.9	2.8				2.9	2.8				2.9	2.8				3.3	3.1	2.8			24.0
26.0																					3.0	2.9				26.0
28.0																					2.8					28.0
30.0																										30.0
32.0																										32.0
34.0																										34.0
36.0																										36.0
38.0																										38.0
40.0																										40.0
42.0																										42.0
44.0																										44.0
46.0																										46.0
48.0																										48.0
50.0																										50.0
52.0																										52.0
54.0																										54.0
56.0																										56.0
58.0																										58.0
60.0																										60.0
64.0																										64.0
1	0	0	0	0		0	0	0	0		0	0	0	0		0	0	0	0		0	0	0	0		1
2	0	0	0	0		0	0	0	0		0	0	0	0		46	46	46	46		0	0	0	0		2
3	0	0	0	0		0	0	0	0		46	46	46	46		0	0	0	0		0	0	0	0		3
4	0	0	0	0		46	46	46	46		0	0	0	0		0	0	0	0		0	0	0	0		4
5	0	0	0	0		0	0	0	0		0	0	0	0		0	0	0	0		46	46	46	46		5
6	0	0	0	0		0	0	0	0		0	0	0	0		0	0	0	0		46	46	46	46		6
ID	1	1	1	1		76	76	76	76		105	105	105	105		131	131	131	131		30	30	30	30		ID
[DEG]	0~84.7	0~84.7	0~84.7	0~84.7		29~84.7	32~84.7	51~84.7	60~84.7		29~84.7	31~84.7	51~84.7	60~84.7		29~84.7	31~84.7	51~84.7	60~84.7		26~84.7	37~84.7	46~84.7	60~84.7		[DEG]
	1	1	1	1		1	1	1	1		1	1	1	1		1	1	1	1		1	1	1	1		
	8.7t	8.7t	8.7t	8.7t		8.7t	8.7t	8.7t	8.7t		8.7t	8.7t	8.7t	8.7t		8.7t	8.7t	8.7t	8.7t		8.7t	8.7t	8.7t	8.7t		

m	18.8	18.8	18.8	18.8	18.8	18.8	18.8	18.8	18.8	18.8	18.8	18.8	18.8	18.8	18.8	22.6	22.6	22.6	22.6	22.6	26.3	26.3	26.3	26.3	26.3	m
°	5	15	30	45	60	5	15	30	45	60	5	15	30	45	60	5	15	30	45	60	5	15	30	45	60	°
3.0																										3.0
3.5																										3.5
4.0	4.3					4.3					4.3															4.0
4.5	4.3					4.3					4.3															4.5
5.0	4.3					4.3					4.3					4.3										5.0
6.0	4.3					4.3					4.3					4.3					4.3					6.0
7.0	4.3	4.3				4.3	4.3				4.3	4.3				4.3	4.3				4.3					7.0
8.0	4.3	4.3				4.3	4.3				4.3	4.3				4.3	4.3				4.3	4.3				8.0
9.0	4.3	4.3				4.3	4.3				4.3	4.3				4.3	4.3				4.3	4.3				9.0
10.0	4.3	4.3	4.3			4.3	4.3	4.3			4.3	4.3	4.3			4.3	4.3				4.3	4.3				10.0
11.0	4.3	4.3	4.1			4.3	4.3	4.2			4.3	4.3	4.2			4.3	4.3	4.1			4.3	4.3	4.3			11.0
12.0	4.3	4.3	4.0	3.3		4.3	4.3	4.0	3.3		4.3	4.3	4.0	3.3		4.3	4.3	4.0			4.3	4.3	4.2			12.0
14.0	4.3	4.3	3.7	3.1		4.3	4.3	3.7	3.1		4.3	4.3	3.7	3.1		4.3	4.3	3.7	3.1		4.3	4.3	3.9	3.2	2.7	14.0
16.0	4.3	4.1	3.5	2.9		4.3	4.2	3.5	2.9		4.3	4.2	3.5	2.9		4.3	4.2	3.5	3.0		4.3	4.3	3.7	3.0	2.6	16.0
18.0	4.3	3.8	3.2	2.8		4.3	3.8	3.2	2.8		4.3	3.9	3.2	2.8		4.3	3.9	3.3	2.9		4.3	4.2	3.5	2.9		18.0
20.0	4.0	3.6	3.0	2.7		4.0	3.6	3.0	2.7		4.0	3.6	3.0	2.7		4.2	3.7	3.1	2.8		4.3	4.0	3.3	2.8		20.0
22.0	3.6	3.3	2.9			3.6	3.3	2.9			3.6	3.3	2.9			3.9	3.4	3.0			3.1	3.7	3.2	2.7		22.0
24.0	3.3	3.1	2.8			3.3	3.1	2.8			3.3	3.1	2.8			3.6	3.3	2.9			2.1	2.6	3.0			24.0
26.0	3.0	2.9				3.0	2.9				3.0	2.9				3.4	3.1	2.8			1.3	1.7	2.2			26.0
28.0	2.8					2.7					2.3					3.2	3.0					0.9	1.3			28.0
30.0																2.9	2.8									30.0
32.0																2.3										32.0
34.0																										34.0
36.0																										36.0
38.0																										38.0
40.0																										40.0
42.0																										42.0
44.0																										44.0
46.0																										46.0
48.0																										48.0
50.0																										50.0
52.0																										52.0
54.0																										54.0
56.0																										56.0
58.0																										58.0
60.0																										60.0
64.0																										64.0
1	0	0	0	0		0	0	0	0		0	0	0	0		0	0	0	0		92	92	92	92	92	1
2	0	0	0	0		0	0	0	0		46	46	46	46		0	0	0	0		92	92	92	92	92	2
3	0	0	0	0		46	46	46	46		46	46	46	46		0	0	0	0		0	0	0	0	0	3
4	46	46	46	46		46	46	46	46		0	0	0	0		0	0	0	0		0	0	0	0	0	4
5	46	46	46	46		0	0	0	0		0	0	0	0		46	46	46	46		0	0	0	0	0	5
6	0	0	0	0		0	0	0	0		0	0	0	0		92	92	92	92		0	0	0	0	0	6
ID	58	58	58	58		88	88	88	88		113	113	113	113		20	20	20	20		134	134	134	134	134	ID
[DEG]	26~84.7	37~84.7	46~84.7	60~84.7		26~84.7	37~84.7	46~84.7	60~84.7		26~84.7	37~84.7	46~84.7	60~84.7		24~84.7	34~84.7	49~84.7	65~84.7		48~84.7	46~84.7	49~84.7	64~84.7	77~84.7	[DEG]
	1	1	1	1		1	1	1	1		1	1	1	1		1	1	1	1		1	1	1	1	1	
	8.7t	8.7t	8.7t	8.7t		8.7t	8.7t	8.7t	8.7t		8.7t	8.7t	8.7t	8.7t		8.7t	8.7t	8.7t	8.7t		8.7t	8.7t	8.7t	8.7t	8.7t	

FLJ	1.6m + 12.4m	6.2 t	8.0m x 7.5m	360 °	JPN

m	30.0	30.0	30.0	30.0	30.0	30.0	30.0	30.0	30.0	30.0	33.7	33.7	33.7	33.7	33.7	37.4	37.4	37.4	37.4	37.4	37.4	37.4	37.4	37.4	37.4	m
°	5	15	30	45	60	5	15	30	45	60	5	15	30	45	60	5	15	30	45	60	5	15	30	45	60	°
3.0																										3.0
3.5																										3.5
4.0																										4.0
4.5																										4.5
5.0																										5.0
6.0	4.0					4.3																				6.0
7.0	4.0					4.3					4.3					4.1										7.0
8.0	4.0					4.3					4.3					4.1					4.3					8.0
9.0	4.0	4.0				4.3	4.3				4.3	4.3				4.1					4.3					9.0
10.0	4.0	4.0				4.3	4.3				4.3	4.3				4.1	4.1				4.3	4.3				10.0
11.0	4.0	4.0				4.3	4.3	4.3			4.3	4.3				4.1	4.1				4.3	4.3				11.0
12.0	4.0	4.0	4.0			4.3	4.3	4.2			4.3	4.3	4.2			4.1	4.1				4.3	4.3				12.0
14.0	4.0	4.0	3.7	3.2		4.3	4.3	3.9	3.2		4.3	4.3	3.9	3.3		4.1	4.1	3.9			4.3	4.3	3.7			14.0
16.0	4.0	4.0	3.5	3.1		4.3	4.3	3.7	3.1		4.3	4.3	3.7	3.2	2.6	4.1	4.1	3.7	3.2	2.6	4.3	4.3	3.5	3.1		16.0
18.0	4.0	4.0	3.4	3.0		4.3	4.3	3.5	3.0		4.3	4.3	3.6	3.0	2.6	4.1	4.1	3.6	3.1	2.6	4.3	4.1	3.4	3.0		18.0
20.0	4.0	3.8	3.2	2.9		4.3	4.1	3.4	2.9		4.2	4.1	3.4	2.9		4.1	4.1	3.4	3.0		4.3	3.9	3.2	2.9		20.0
22.0	4.0	3.6	3.1	2.8		3.0	3.6	3.2	2.8		2.9	3.6	3.3	2.8		3.0	3.6	3.3	2.9		4.2	3.7	3.1	2.8		22.0
24.0	3.7	3.4	3.0	2.7		2.0	2.5	3.1	2.7		1.9	2.5	3.1	2.8		2.0	2.5	3.2	2.8		3.9	3.5	3.0	2.7		24.0
26.0	3.4	3.3	2.9			1.2	1.6	2.2			1.1	1.5	2.1	2.6		1.1	1.6	2.2	2.7		3.5	3.4	2.9	2.7		26.0
28.0	3.1	3.1	2.8					1.3					1.3				0.9	1.4	1.8		2.8	3.1	2.8	2.6		28.0
30.0	2.6	2.8	2.7																		2.2	2.4	2.7			30.0
32.0	2.1	2.2	2.4																		1.7	1.9	2.2			32.0
34.0	1.6	1.7																			1.2	1.4	1.6			34.0
36.0		1.3																				1.0	1.2			36.0
38.0																										38.0
40.0																										40.0
42.0																										42.0
44.0																										44.0
46.0																										46.0
48.0																										48.0
50.0																										50.0
52.0																										52.0
54.0																										54.0
56.0																										56.0
58.0																										58.0
60.0																										60.0
64.0																										64.0
1	0	0	0	0		92	92	92	92		92	92	92	92	92	92	92	92	92	92	0	0	0	0		1
2	0	0	0	0		92	92	92	92		92	92	92	92	92	92	92	92	92	92	0	0	0	0		2
3	0	0	0	0		46	46	46	46		92	92	92	92	92	92	92	92	92	92	46	46	46	46		3
4	46	46	46	46		0	0	0	0		0	0	0	0	0	46	46	46	46	46	92	92	92	92		4
5	92	92	92	92		0	0	0	0		0	0	0	0	0	0	0	0	0	0	92	92	92	92		5
6	92	92	92	92		0	0	0	0		0	0	0	0	0	0	0	0	0	0	92	92	92	92		6
ID	22	22	22	22		116	116	116	116		110	110	110	110	110	93	93	93	93	93	24	24	24	24		ID
[DEG]	38~84.7	35~84.7	47~84.7	64~84.7		53~84.7	55~84.7	55~84.7	64~84.7		57~84.7	59~84.7	59~84.7	64~84.7	77~84.7	60~84.7	59~84.7	62~84.7	64~84.7	79~84.7	49~84.7	47~84.7	49~84.7	64~84.7		[DEG]
	1	1	1	1		1	1	1	1		1	1	1	1	1	1	1	1	1	1	1	1	1	1		
	8.7t	8.7t	8.7t	8.7t		8.7t	8.7t	8.7t	8.7t		8.7t	8.7t	8.7t	8.7t	8.7t	8.7t	8.7t	8.7t	8.7t	8.7t	8.7t	8.7t	8.7t	8.7t		

m	41.2	41.2	41.2	41.2	41.2	44.9	44.9	44.9	44.9	44.9	44.9	44.9	44.9	44.9	44.9	48.6	48.6	48.6	48.6	48.6	48.6	48.6	48.6	48.6	48.6	m
°	5	15	30	45	60	5	15	30	45	60	5	15	30	45	60	5	15	30	45	60	5	15	30	45	60	°
3.0																										3.0
3.5																										3.5
4.0																										4.0
4.5																										4.5
5.0																										5.0
6.0																										6.0
7.0																										7.0
8.0	4.3																									8.0
9.0	4.3										4.0															9.0
10.0	4.3					3.0					4.0					3.2					3.6					10.0
11.0	4.3	4.3				3.0					4.0	4.0				3.2					3.6					11.0
12.0	4.3	4.3				3.0	3.0				4.0	4.0				3.2	3.2				3.6	3.6				12.0
14.0	4.3	4.3	3.9			3.0	3.0				4.0	4.0				3.2	3.2				3.6	3.6				14.0
16.0	4.3	4.3	3.7	3.2		3.0	3.0	3.0			4.0	4.0	3.7			3.2	3.2	3.2			3.6	3.6	3.6			16.0
18.0	4.3	4.3	3.5	3.1	2.6	3.0	3.0	3.0	2.9		4.0	4.0	3.5	3.0	2.6	3.2	3.2	3.2	3.0		3.6	3.6	3.5	3.0		18.0
20.0	4.3	4.1	3.4	3.0	2.6	3.0	3.0	3.0	2.9		4.0	4.0	3.4	2.9	2.6	3.2	3.2	3.2	2.9	2.6	3.6	3.6	3.3	2.9	2.6	20.0
22.0	3.1	3.7	3.3	2.9		3.0	3.0	3.0	2.8		3.2	3.8	3.2	2.9		3.2	3.2	3.2	2.8	2.5	3.3	3.6	3.2	2.8	2.5	22.0
24.0	2.0	2.6	3.2	2.8		3.0	3.0	3.0	2.7		2.2	2.7	3.1	2.8		3.0	3.2	3.1	2.7		2.3	2.9	3.1	2.8		24.0
26.0	1.2	1.7	2.3	2.7		3.0	3.0	2.9	2.6		1.3	1.8	2.5	2.7		2.1	2.6	3.0	2.7		1.5	2.0	2.6	2.7		26.0
28.0		0.9	1.5	1.9		2.2	2.6	2.8	2.6			1.1	1.6	2.1		1.4	1.8	2.3	2.6			1.2	1.8	2.2		28.0
30.0				1.1		1.6	1.9	2.3	2.5				0.9	1.3			1.2	1.6	1.9					1.4		30.0
32.0						1.1	1.4	1.7	2.0									1.0	1.3							32.0
34.0							0.9	1.2																		34.0
36.0																										36.0
38.0																										38.0
40.0																										40.0
42.0																										42.0
44.0																										44.0
46.0																										46.0
48.0																										48.0
50.0																										50.0
52.0																										52.0
54.0																										54.0
56.0																										56.0
58.0																										58.0
60.0																										60.0
64.0																										64.0
1	92	92	92	92	92	0	0	0	0		92	92	92	92	92	46	46	46	46	46	92	92	92	92	92	1
2	92	92	92	92	92	46	46	46	46		92	92	92	92	92	92	92	92	92	92	92	92	92	92	92	2
3	92	92	92	92	92	92	92	92	92		92	92	92	92	92	92	92	92	92	92	92	92	92	92	92	3
4	92	92	92	92	92	92	92	92	92		92	92	92	92	92	92	92	92	92	92	92	92	92	92	92	4
5	0	0	0	0	0	92	92	92	92		46	46	46	46	46	92	92	92	92	92	92	92	92	92	92	5
6	0	0	0	0	0	92	92	92	92		0	0	0	0	0	46	46	46	46	46	0	0	0	0	0	6
ID	83	83	83	83	83	26	26	26	26		65	65	65	65	65	38	38	38	38	38	49	49	49	49	49	ID
[DEG]	62~84.7	62~84.7	64~84.7	63~84.7	78~84.7	58~84.7	57~84.7	60~84.7	64~84.7		65~84.7	64~84.7	64~84.7	66~84.7	79~84.7	65~84.7	64~84.7	64~84.7	66~84.7	78~84.7	67~84.7	66~84.7	69~84.7	68~84.7	78~84.7	[DEG]
	1	1	1	1	1	1	1	1	1		1	1	1	1	1	1	1	1	1	1	1	1	1	1	1	
	8.7t	8.7t	8.7t	8.7t	8.7t	8.7t	8.7t	8.7t	8.7t		8.7t	8.7t	8.7t	8.7t	8.7t	8.7t	8.7t	8.7t	8.7t	8.7t	8.7t	8.7t	8.7t	8.7t	8.7t	

フルオートラフィングジブ

FLJ	1.6m + 12.4m	6.2 t	8.0m x 7.5m	360 °	JPN

m	52.3	52.3	52.3	52.3	52.3	52.3	52.3	52.3	52.3	52.3	56.0	56.0	56.0	56.0	56.0	60.0	60.0	60.0	60.0	60.0						m
°	5	15	30	45	60	5	15	30	45	60	5	15	30	45	60	5	15	30	45	60						°
3.0																										3.0
3.5																										3.5
4.0																										4.0
4.5																										4.5
5.0																										5.0
6.0																										6.0
7.0																										7.0
8.0																										8.0
9.0																										9.0
10.0																										10.0
11.0	2.7					3.0																				11.0
12.0	2.7					3.0					2.6															12.0
14.0	2.7	2.7				3.0	3.0				2.6	2.6				1.9										14.0
16.0	2.7	2.7	2.7			3.0	3.0	3.0			2.6	2.6				1.9	1.9									16.0
18.0	2.7	2.7	2.7			3.0	3.0	3.0			2.6	2.6	2.6			1.9	1.9	1.9								18.0
20.0	2.7	2.7	2.7	2.7	2.6	3.0	3.0	3.0	2.9	2.6	2.6	2.6	2.6	2.6		1.9	1.9	1.9	1.9							20.0
22.0	2.7	2.7	2.7	2.7	2.5	3.0	3.0	3.0	2.8	2.5	2.6	2.6	2.6	2.6	2.5	1.9	1.9	1.9	1.9	1.9						22.0
24.0	2.7	2.7	2.7	2.7		2.5	3.0	3.0	2.7		2.6	2.6	2.6	2.6	2.5	1.9	1.9	1.9	1.9	1.9						24.0
26.0	2.3	2.7	2.7	2.6		1.7	2.1	2.8	2.7		1.8	2.3	2.6	2.6			1.9	1.9	1.9							26.0
28.0	1.6	1.9	2.5	2.6			1.4	1.9	2.4			1.5	2.1	2.5				1.9	1.9							28.0
30.0		1.3	1.8	2.1				1.2	1.6				1.4	1.8					1.7							30.0
32.0			1.2	1.5																						32.0
34.0				0.9																						34.0
36.0																										36.0
38.0																										38.0
40.0																										40.0
42.0																										42.0
44.0																										44.0
46.0																										46.0
48.0																										48.0
50.0																										50.0
52.0																										52.0
54.0																										54.0
56.0																										56.0
58.0																										58.0
60.0																										60.0
64.0																										64.0
1	46	46	46	46	46	92	92	92	92	92	92	92	92	92	92	100	100	100	100	100						1
2	92	92	92	92	92	92	92	92	92	92	92	92	92	92	92	100	100	100	100	100						2
3	92	92	92	92	92	92	92	92	92	92	92	92	92	92	92	100	100	100	100	100						3
4	92	92	92	92	92	92	92	92	92	92	92	92	92	92	92	100	100	100	100	100						4
5	92	92	92	92	92	92	92	92	92	92	92	92	92	92	92	100	100	100	100	100						5
6	92	92	92	92	92	46	46	46	46	46	92	92	92	92	92	100	100	100	100	100						6
ID	28	28	28	28	28	39	39	39	39	39	29	29	29	29	29	19	19	19	19	19						ID
[DEG]	67~84.7	66~84.7	66~84.7	65~84.7	79~84.7	68~84.7	68~84.7	68~84.7	70~84.7	79~84.7	70~84.7	70~84.7	70~84.7	72~84.7	79~84.7	73~84.7	73~84.7	74~84.7	73~84.7	79~84.7						[DEG]
	1	1	1	1	1	1	1	1	1	1	1	1	1	1	1	1	1	1	1	1						
	8.7t	8.7t	8.7t	8.7t	8.7t	8.7t	8.7t	8.7t	8.7t	8.7t	8.7t	8.7t	8.7t	8.7t	8.7t	8.7t	8.7t	8.7t	8.7t	8.7t						

FLJ	1.6m + 17.4m	6.2 t	8.0m x 7.5m	360 °	JPN

m	11.4	11.4	11.4	11.4	11.4	15.1	15.1	15.1	15.1	15.1	15.1	15.1	15.1	15.1	15.1	15.1	15.1	15.1	15.1	15.1	18.8	18.8	18.8	18.8	18.8	m
°	5	15	30	45	60	5	15	30	45	60	5	15	30	45	60	5	15	30	45	60	5	15	30	45	60	°
3.0																										3.0
3.5																										3.5
4.0																										4.0
4.5	3.3																									4.5
5.0	3.3					3.1					3.3					3.3										5.0
6.0	3.3					3.1					3.3					3.3					2.7					6.0
7.0	3.3					3.1					3.3					3.3					2.7					7.0
8.0	3.3	3.3				3.1					3.3					3.3					2.7					8.0
9.0	3.3	3.3				3.1	3.1				3.3	3.3				3.3	3.3				2.7	2.7				9.0
10.0	3.3	3.2				3.1	3.1				3.3	3.3				3.3	3.3				2.7	2.7				10.0
11.0	3.3	3.0				3.1	3.1				3.3	3.1				3.3	3.1				2.7	2.7				11.0
12.0	3.2	2.9	2.5			3.1	2.9				3.3	2.9				3.3	3.0				2.7	2.7				12.0
14.0	2.9	2.6	2.3			3.1	2.7	2.3			3.1	2.7	2.3			3.1	2.7	2.3			2.7	2.7	2.3			14.0
16.0	2.6	2.4	2.1	1.8		2.8	2.5	2.2	1.9		2.8	2.5	2.2	1.9		2.8	2.5	2.2	1.9		2.7	2.5	2.2			16.0
18.0	2.4	2.2	1.9	1.7		2.6	2.3	2.0	1.8		2.6	2.3	2.0	1.8		2.6	2.3	2.0	1.8		2.7	2.4	2.0	1.8		18.0
20.0	2.2	2.0	1.8	1.6		2.4	2.1	1.9	1.7		2.4	2.1	1.9	1.7		2.4	2.1	1.9	1.7		2.5	2.2	1.9	1.7		20.0
22.0	2.0	1.9	1.7			2.2	2.0	1.8	1.6		2.2	2.0	1.8	1.6		2.2	2.0	1.8	1.6		2.3	2.1	1.8	1.6		22.0
24.0	1.8	1.7				2.1	1.9	1.7			2.1	1.9	1.7			2.1	1.9	1.7			2.2	2.0	1.8	1.6		24.0
26.0	1.7	1.6				1.9	1.8	1.6			1.9	1.8	1.6			1.9	1.8	1.6			2.0	1.9	1.7			26.0
28.0						1.8	1.6				1.8	1.6				1.8	1.6				1.9	1.8	1.6			28.0
30.0						1.6					1.6					1.6					1.9	1.7				30.0
32.0																					1.7	1.6				32.0
34.0																					1.6					34.0
36.0																										36.0
38.0																										38.0
40.0																										40.0
42.0																										42.0
44.0																										44.0
46.0																										46.0
48.0																										48.0
50.0																										50.0
52.0																										52.0
54.0																										54.0
56.0																										56.0
58.0																										58.0
60.0																										60.0
64.0																										64.0
1	0	0	0	0		0	0	0	0		0	0	0	0		0	0	0	0		0	0	0	0		1
2	0	0	0	0		0	0	0	0		0	0	0	0		46	46	46	46		0	0	0	0		2
3	0	0	0	0		0	0	0	0		46	46	46	46		0	0	0	0		0	0	0	0		3
4	0	0	0	0		46	46	46	46		0	0	0	0		0	0	0	0		0	0	0	0		4
5	0	0	0	0		0	0	0	0		0	0	0	0		0	0	0	0		46	46	46	46		5
6	0	0	0	0		0	0	0	0		0	0	0	0		0	0	0	0		46	46	46	46		6
ID	1	1	1	1		76	76	76	76		105	105	105	105		131	131	131	131		30	30	30	30		ID
[DEG]	0~84.7	0~84.7	0~84.7	0~84.7		23~84.7	36~84.7	47~84.7	63~84.7		23~84.7	36~84.7	47~84.7	63~84.7		23~84.7	36~84.7	47~84.7	63~84.7		21~84.7	33~84.7	49~84.7	63~84.7		[DEG]
	1	1	1	1		1	1	1	1		1	1	1	1		1	1	1	1		1	1	1	1		
	8.7t	8.7t	8.7t	8.7t		8.7t	8.7t	8.7t	8.7t		8.7t	8.7t	8.7t	8.7t		8.7t	8.7t	8.7t	8.7t		8.7t	8.7t	8.7t	8.7t		

FLJ	1.6m + 17.4m	6.2 t	8.0m x 7.5m	360 °	JPN

m	18.8	18.8	18.8	18.8	18.8	18.8	18.8	18.8	18.8	18.8	18.8	18.8	18.8	18.8	18.8	22.6	22.6	22.6	22.6	22.6	26.3	26.3	26.3	26.3	26.3	m
°	5	15	30	45	60	5	15	30	45	60	5	15	30	45	60	5	15	30	45	60	5	15	30	45	60	°
3.0																										3.0
3.5																										3.5
4.0																										4.0
4.5																										4.5
5.0																										5.0
6.0	2.9					3.2					3.3					2.5										6.0
7.0	2.9					3.2					3.3					2.5					3.3					7.0
8.0	2.9					3.2					3.3					2.5					3.3					8.0
9.0	2.9	2.9				3.2	3.2				3.3	3.3				2.5					3.3					9.0
10.0	2.9	2.9				3.2	3.2				3.3	3.3				2.5	2.5				3.3	3.3				10.0
11.0	2.9	2.9				3.2	3.2				3.3	3.2				2.5	2.5				3.3	3.3				11.0
12.0	2.9	2.9				3.2	3.0				3.3	3.0				2.5	2.5				3.3	3.2				12.0
14.0	2.9	2.8	2.3			3.2	2.8	2.3			3.2	2.8	2.3			2.5	2.5	2.3			3.3	2.9	2.4			14.0
16.0	2.9	2.5	2.2	1.9		2.9	2.6	2.2	1.9		3.0	2.6	2.2	1.9		2.5	2.5	2.2			3.2	2.7	2.2			16.0
18.0	2.7	2.4	2.1	1.8		2.7	2.4	2.1	1.8		2.7	2.4	2.1	1.8		2.5	2.4	2.1	1.8		3.0	2.5	2.1	1.9		18.0
20.0	2.5	2.2	1.9	1.7		2.5	2.2	1.9	1.7		2.5	2.2	2.0	1.7		2.5	2.3	1.9	1.7		2.8	2.4	2.0	1.8		20.0
22.0	2.3	2.1	1.9	1.6		2.3	2.1	1.9	1.6		2.4	2.1	1.9	1.6		2.4	2.1	1.9	1.7		2.6	2.3	1.9	1.7		22.0
24.0	2.2	2.0	1.8	1.6		2.2	2.0	1.8	1.6		2.2	2.0	1.8	1.6		2.3	2.0	1.8	1.6		2.4	2.1	1.9	1.6		24.0
26.0	2.1	1.9	1.7			2.1	1.9	1.7			2.1	1.9	1.7			2.1	1.9	1.7	1.5		2.3	2.0	1.8	1.6		26.0
28.0	1.9	1.8	1.6			2.0	1.8	1.6			2.0	1.8	1.6			2.0	1.8	1.7			1.5	1.9	1.7	1.5		28.0
30.0	1.9	1.7				1.9	1.7				1.9	1.7				1.9	1.8	1.6			0.9	1.3	1.7			30.0
32.0	1.7	1.6				1.7	1.6				1.7	1.6				1.8	1.7						1.2			32.0
34.0	1.6					1.6					1.5					1.8	1.6									34.0
36.0																1.7										36.0
38.0																										38.0
40.0																										40.0
42.0																										42.0
44.0																										44.0
46.0																										46.0
48.0																										48.0
50.0																										50.0
52.0																										52.0
54.0																										54.0
56.0																										56.0
58.0																										58.0
60.0																										60.0
64.0																										64.0
1	0	0	0	0		0	0	0	0		0	0	0	0		0	0	0	0		92	92	92	92		1
2	0	0	0	0		0	0	0	0		46	46	46	46		0	0	0	0		92	92	92	92		2
3	0	0	0	0		46	46	46	46		46	46	46	46		0	0	0	0		0	0	0	0		3
4	46	46	46	46		46	46	46	46		0	0	0	0		0	0	0	0		0	0	0	0		4
5	46	46	46	46		0	0	0	0		0	0	0	0		46	46	46	46		0	0	0	0		5
6	0	0	0	0		0	0	0	0		0	0	0	0		92	92	92	92		0	0	0	0		6
ID	58	58	58	58		88	88	88	88		113	113	113	113		20	20	20	20		134	134	134	134		ID
[DEG]	21~84.7	32~84.7	49~84.7	63~84.7		21~84.7	32~84.7	49~84.7	63~84.7		20~84.7	32~84.7	49~84.7	63~84.7		28~84.7	37~84.7	51~84.7	63~84.7		48~84.7	52~84.7	51~84.7	62~84.7		[DEG]
	1	1	1	1		1	1	1	1		1	1	1	1		1	1	1	1		1	1	1	1		
	8.7t	8.7t	8.7t	8.7t		8.7t	8.7t	8.7t	8.7t		8.7t	8.7t	8.7t	8.7t		8.7t	8.7t	8.7t	8.7t		8.7t	8.7t	8.7t	8.7t		

m	30.0	30.0	30.0	30.0	30.0	30.0	30.0	30.0	30.0	30.0	33.7	33.7	33.7	33.7	33.7	37.4	37.4	37.4	37.4	37.4	37.4	37.4	37.4	37.4	37.4	m
°	5	15	30	45	60	5	15	30	45	60	5	15	30	45	60	5	15	30	45	60	5	15	30	45	60	°
3.0																										3.0
3.5																										3.5
4.0																										4.0
4.5																										4.5
5.0																										5.0
6.0																										6.0
7.0																										7.0
8.0	2.3					3.2					3.1															8.0
9.0	2.3					3.2					3.1					2.4					2.5					9.0
10.0	2.3					3.2					3.1					2.4					2.5					10.0
11.0	2.3	2.3				3.2	3.2				3.1					2.4					2.5					11.0
12.0	2.3	2.3				3.2	3.2				3.1	3.1				2.4	2.4				2.5					12.0
14.0	2.3	2.3				3.2	2.9				3.1	3.0				2.4	2.4				2.5	2.5				14.0
16.0	2.3	2.3	2.2			3.2	2.8	2.3			3.1	2.8	2.3			2.4	2.4	2.2			2.5	2.5				16.0
18.0	2.3	2.3	2.1			3.1	2.6	2.2	1.9		3.1	2.6	2.2			2.4	2.4	2.2			2.5	2.5	2.1			18.0
20.0	2.3	2.3	2.0	1.8		2.9	2.4	2.1	1.8	1.5	2.9	2.5	2.1	1.8		2.4	2.4	2.1	1.8		2.5	2.4	2.0	1.8		20.0
22.0	2.3	2.2	1.9	1.7		2.7	2.3	2.0	1.7	1.5	2.7	2.3	2.0	1.8		2.4	2.4	2.0	1.8	1.5	2.5	2.2	1.9	1.7	1.5	22.0
24.0	2.3	2.1	1.8	1.7		2.5	2.2	1.9	1.7		2.6	2.2	1.9	1.7		2.4	2.2	1.9	1.7	1.5	2.5	2.1	1.8	1.7	1.5	24.0
26.0	2.3	2.0	1.8	1.6		2.1	2.1	1.8	1.6		2.0	2.1	1.8	1.6		2.0	2.2	1.8	1.7		2.4	2.1	1.8	1.6		26.0
28.0	2.2	1.9	1.7	1.6		1.4	1.9	1.8	1.6		1.3	1.8	1.8	1.6		1.3	1.8	1.8	1.6		2.2	2.0	1.7	1.6		28.0
30.0	2.1	1.8	1.6	1.5			1.2	1.7	1.5			1.1	1.7	1.5			1.2	1.7	1.6		2.1	1.9	1.7	1.5		30.0
32.0	2.0	1.8	1.6					1.2					1.1	1.5				1.2	1.5		2.1	1.8	1.6	1.5		32.0
34.0	1.9	1.7	1.6																1.0		1.7	1.8	1.6	1.5		34.0
36.0		1.7	1.5																		1.3	1.6	1.5			36.0
38.0		1.6																			1.0	1.2	1.5			38.0
40.0		1.2																					1.1			40.0
42.0		0.9																								42.0
44.0																										44.0
46.0																										46.0
48.0																										48.0
50.0																										50.0
52.0																										52.0
54.0																										54.0
56.0																										56.0
58.0																										58.0
60.0																										60.0
64.0																										64.0
1	0	0	0	0		92	92	92	92	92	92	92	92	92		92	92	92	92	92	0	0	0	0	0	1
2	0	0	0	0		92	92	92	92	92	92	92	92	92		92	92	92	92	92	0	0	0	0	0	2
3	0	0	0	0		46	46	46	46	46	92	92	92	92		92	92	92	92	92	46	46	46	46	46	3
4	46	46	46	46		0	0	0	0	0	0	0	0	0		46	46	46	46	46	92	92	92	92	92	4
5	92	92	92	92		0	0	0	0	0	0	0	0	0		0	0	0	0	0	92	92	92	92	92	5
6	92	92	92	92		0	0	0	0	0	0	0	0	0		0	0	0	0	0	92	92	92	92	92	6
ID	22	22	22	22		116	116	116	116	116	110	110	110	110		93	93	93	93	93	24	24	24	24	24	ID
[DEG]	48~84.7	32~84.7	49~84.7	63~84.7		56~84.7	56~84.7	56~84.7	62~84.7	77~84.7	59~84.7	59~84.7	60~84.7	62~84.7		61~84.7	62~84.7	63~84.7	62~84.7	77~84.7	49~84.7	52~84.7	51~84.7	63~84.7	78~84.7	[DEG]
	1	1	1	1		1	1	1	1	1	1	1	1	1		1	1	1	1	1	1	1	1	1	1	
	8.7t	8.7t	8.7t	8.7t		8.7t	8.7t	8.7t	8.7t	8.7t	8.7t	8.7t	8.7t	8.7t		8.7t	8.7t	8.7t	8.7t	8.7t	8.7t	8.7t	8.7t	8.7t	8.7t	

フルオートラフィングジブ

FLJ	1.6m + 17.4m	6.2 t	8.0m x 7.5m	360 °	JPN

m	41.2	41.2	41.2	41.2	41.2	44.9	44.9	44.9	44.9	44.9	44.9	44.9	44.9	44.9	44.9	48.6	48.6	48.6	48.6	48.6	48.6	48.6	48.6	48.6	48.6	m
°	5	15	30	45	60	5	15	30	45	60	5	15	30	45	60	5	15	30	45	60	5	15	30	45	60	°
3.0																										3.0
3.5																										3.5
4.0																										4.0
4.5																										4.5
5.0																										5.0
6.0																										6.0
7.0																										7.0
8.0																										8.0
9.0																										9.0
10.0	2.7										2.4															10.0
11.0	2.7					1.9					2.4					2.0					2.2					11.0
12.0	2.7					1.9					2.4					2.0					2.2					12.0
14.0	2.7	2.7				1.9	1.9				2.4	2.4				2.0	2.0				2.2	2.2				14.0
16.0	2.7	2.7				1.9	1.9				2.4	2.4				2.0	2.0				2.2	2.2				16.0
18.0	2.7	2.6	2.1			1.9	1.9	1.9			2.4	2.4	2.1			2.0	2.0				2.2	2.2				18.0
20.0	2.7	2.5	2.1	1.8		1.9	1.9	1.9			2.4	2.4	2.0			2.0	2.0	2.0			2.2	2.2	2.0			20.0
22.0	2.7	2.4	2.0	1.8	1.5	1.9	1.9	1.9	1.7		2.4	2.4	2.0	1.7		2.0	2.0	1.9	1.7		2.2	2.2	1.9	1.7		22.0
24.0	2.6	2.3	1.9	1.7	1.5	1.9	1.9	1.8	1.7	1.5	2.4	2.2	1.9	1.7	1.5	2.0	2.0	1.9	1.7	1.5	2.2	2.2	1.9	1.7	1.5	24.0
26.0	2.0	2.2	1.8	1.7		1.9	1.9	1.8	1.6	1.5	2.1	2.2	1.8	1.7	1.5	2.0	2.0	1.8	1.6	1.5	2.2	2.1	1.8	1.6	1.5	26.0
28.0	1.3	1.9	1.8	1.6		1.9	1.9	1.7	1.6		1.3	1.9	1.8	1.6		2.0	2.0	1.7	1.6		1.4	2.0	1.8	1.6		28.0
30.0		1.2	1.7	1.6		1.9	1.9	1.7	1.5			1.3	1.7	1.6		1.4	1.9	1.7	1.6			1.4	1.7	1.6		30.0
32.0			1.2	1.6		1.6	1.9	1.6	1.5				1.3	1.5		0.9	1.3	1.6	1.5				1.4	1.5		32.0
34.0				1.1		1.2	1.5	1.6	1.5					1.2				1.3	1.5					1.3		34.0
36.0							1.1	1.5	1.5									0.9	1.2							36.0
38.0								1.1																		38.0
40.0																										40.0
42.0																										42.0
44.0																										44.0
46.0																										46.0
48.0																										48.0
50.0																										50.0
52.0																										52.0
54.0																										54.0
56.0																										56.0
58.0																										58.0
60.0																										60.0
64.0																										64.0
1	92	92	92	92	92	0	0	0	0	0	92	92	92	92	92	46	46	46	46	46	92	92	92	92	92	1
2	92	92	92	92	92	46	46	46	46	46	92	92	92	92	92	92	92	92	92	92	92	92	92	92	92	2
3	92	92	92	92	92	92	92	92	92	92	92	92	92	92	92	92	92	92	92	92	92	92	92	92	92	3
4	92	92	92	92	92	92	92	92	92	92	92	92	92	92	92	92	92	92	92	92	92	92	92	92	92	4
5	0	0	0	0	0	92	92	92	92	92	46	46	46	46	46	92	92	92	92	92	92	92	92	92	92	5
6	0	0	0	0	0	92	92	92	92	92	0	0	0	0	0	46	46	46	46	46	0	0	0	0	0	6
ID	83	83	83	83	83	26	26	26	26	26	65	65	65	65	65	38	38	38	38	38	49	49	49	49	49	ID
[DEG]	64~84.7	64~84.7	65~84.7	65~84.7	79~84.7	60~84.7	60~84.7	61~84.7	65~84.7	78~84.7	66~84.7	66~84.7	67~84.7	67~84.7	78~84.7	64~84.7	66~84.7	65~84.7	67~84.7	79~84.7	68~84.7	68~84.7	69~84.7	69~84.7	79~84.7	[DEG]
	1	1	1	1	1	1	1	1	1	1	1	1	1	1	1	1	1	1	1	1	1	1	1	1	1	
	8.7t	8.7t	8.7t	8.7t	8.7t	8.7t	8.7t	8.7t	8.7t	8.7t	8.7t	8.7t	8.7t	8.7t	8.7t	8.7t	8.7t	8.7t	8.7t	8.7t	8.7t	8.7t	8.7t	8.7t	8.7t	

m	52.3	52.3	52.3	52.3	52.3	52.3	52.3	52.3	52.3	52.3	56.0	56.0	56.0	56.0	56.0	60.0	60.0	60.0	60.0	60.0						m
°	5	15	30	45	60	5	15	30	45	60	5	15	30	45	60	5	15	30	45	60						°
3.0																										3.0
3.5																										3.5
4.0																										4.0
4.5																										4.5
5.0																										5.0
6.0																										6.0
7.0																										7.0
8.0																										8.0
9.0																										9.0
10.0																										10.0
11.0																										11.0
12.0						2.0																				12.0
14.0	1.8					2.0					1.8															14.0
16.0	1.8	1.8				2.0	2.0				1.8	1.8				1.0										16.0
18.0	1.8	1.8				2.0	2.0				1.8	1.8				1.0	1.0									18.0
20.0	1.8	1.8	1.8			2.0	2.0	2.0			1.8	1.8				1.0	1.0									20.0
22.0	1.8	1.8	1.8			2.0	2.0	1.9			1.8	1.8	1.8			1.0	1.0	1.0								22.0
24.0	1.8	1.8	1.8	1.6		2.0	2.0	1.9	1.7		1.8	1.8	1.8	1.6		1.0	1.0	1.0								24.0
26.0	1.8	1.8	1.8	1.6	1.5	2.0	2.0	1.8	1.6	1.5	1.8	1.8	1.8	1.6	1.5	1.0	1.0	1.0	1.0							26.0
28.0	1.8	1.8	1.7	1.6	1.4	1.6	2.0	1.7	1.6	1.4	1.7	1.8	1.7	1.6	1.4		1.0	1.0	1.0	1.0						28.0
30.0	1.5	1.8	1.7	1.5			1.5	1.7	1.5			1.6	1.7	1.5				1.0	1.0	1.0						30.0
32.0	1.0	1.4	1.6	1.5				1.5	1.5				1.6	1.5				1.0	1.0							32.0
34.0		0.9	1.5	1.5					1.4					1.5												34.0
36.0			1.0	1.3																						36.0
38.0				0.9																						38.0
40.0																										40.0
42.0																										42.0
44.0																										44.0
46.0																										46.0
48.0																										48.0
50.0																										50.0
52.0																										52.0
54.0																										54.0
56.0																										56.0
58.0																										58.0
60.0																										60.0
64.0																										64.0
1	46	46	46	46	46	92	92	92	92	92	92	92	92	92	92	100	100	100	100	100						1
2	92	92	92	92	92	92	92	92	92	92	92	92	92	92	92	100	100	100	100	100						2
3	92	92	92	92	92	92	92	92	92	92	92	92	92	92	92	100	100	100	100	100						3
4	92	92	92	92	92	92	92	92	92	92	92	92	92	92	92	100	100	100	100	100						4
5	92	92	92	92	92	92	92	92	92	92	92	92	92	92	92	100	100	100	100	100						5
6	92	92	92	92	92	46	46	46	46	46	92	92	92	92	92	100	100	100	100	100						6
ID	28	28	28	28	28	39	39	39	39	39	29	29	29	29	29	19	19	19	19	19						ID
[DEG]	66~84.7	66~84.7	67~84.7	67~84.7	78~84.7	69~84.7	70~84.7	71~84.7	71~84.7	78~84.7	71~84.7	72~84.7	73~84.7	73~84.7	79~84.7	73~84.7	74~84.7	74~84.7	76~84.7	78~84.7						[DEG]
	1	1	1	1	1	1	1	1	1	1	1	1	1	1	1	1	1	1	1	1						
	8.7t	8.7t	8.7t	8.7t	8.7t	8.7t	8.7t	8.7t	8.7t	8.7t	8.7t	8.7t	8.7t	8.7t	8.7t	8.7t	8.7t	8.7t	8.7t	8.7t						

FLJ	1.6m + 7.4m	6.2 t	8.0m x 6.2m	360 °	JPN

m	11.4	11.4	11.4	11.4	11.4	15.1	15.1	15.1	15.1	15.1	15.1	15.1	15.1	15.1	15.1	15.1	15.1	15.1	15.1	15.1	18.8	18.8	18.8	18.8	18.8	m
°	5	15	30	45	60	5	15	30	45	60	5	15	30	45	60	5	15	30	45	60	5	15	30	45	60	°
3.0	7.3					7.3					7.3					7.3					7.3					3.0
3.5	7.3					7.3					7.3					7.3					7.3					3.5
4.0	7.3	7.3				7.3	7.3				7.3	7.3				7.3	7.3				7.3					4.0
4.5	7.3	7.3				7.3	7.3				7.3	7.3				7.3	7.3				7.3					4.5
5.0	7.3	7.3	7.3			7.3	7.3				7.3	7.3				7.3	7.3				7.3	7.3				5.0
6.0	7.3	7.3	7.3			7.3	7.3	7.3			7.3	7.3	7.3			7.3	7.3	7.3			7.3	7.3	7.3			6.0
7.0	7.3	7.3	7.3	6.5	5.0	7.3	7.3	7.3	6.7		7.3	7.3	7.3	6.7		7.3	7.3	7.3	6.7		7.3	7.3	7.3			7.0
8.0	7.3	7.3	7.3	6.3	4.9	7.3	7.3	7.3	6.5	5.0	7.3	7.3	7.3	6.5	5.0	7.3	7.3	7.3	6.5	5.0	7.3	7.3	7.3	6.6	5.0	8.0
9.0	7.3	7.3	7.2	6.0		7.3	7.3	7.3	6.3	4.9	7.3	7.3	7.3	6.3	4.9	7.3	7.3	7.3	6.3	4.9	7.3	7.3	7.3	6.4	4.9	9.0
10.0	7.3	7.3	6.9	5.9		7.3	7.3	7.3	6.1		7.3	7.3	7.3	6.1		7.3	7.3	7.3	6.1		7.3	7.3	7.3	6.3	4.9	10.0
11.0	7.3	7.3	6.6	5.7		7.3	7.3	7.0	5.9		7.3	7.3	7.0	5.9		7.3	7.3	7.0	5.9		7.3	7.3	7.3	6.1		11.0
12.0	7.3	7.0	6.3			7.3	7.3	6.8	5.8		7.3	7.3	6.8	5.8		7.3	7.3	6.8	5.8		7.3	7.3	7.2	6.0		12.0
14.0	6.4	6.2	5.9			7.3	7.1	6.3			7.3	7.1	6.3			7.3	7.1	6.3			7.3	7.3	6.7	5.7		14.0
16.0	5.7	5.7				6.8	6.4	5.9			6.8	6.4	5.9			6.5	6.4	5.9			7.3	7.1	6.3			16.0
18.0						5.4	5.6				5.2	5.4				4.9	5.1				5.9	6.1	6.0			18.0
20.0						4.2					4.0					3.8					4.6	4.8				20.0
22.0																					3.7	3.8				22.0
24.0																					2.9					24.0
26.0																										26.0
28.0																										28.0
30.0																										30.0
32.0																										32.0
34.0																										34.0
36.0																										36.0
38.0																										38.0
40.0																										40.0
42.0																										42.0
44.0																										44.0
46.0																										46.0
48.0																										48.0
50.0																										50.0
52.0																										52.0
54.0																										54.0
56.0																										56.0
58.0																										58.0
60.0																										60.0
64.0																										64.0
1	0	0	0	0	0	0	0	0	0	0	0	0	0	0	0	0	0	0	0	0	0	0	0	0	0	1
2	0	0	0	0	0	0	0	0	0	0	0	0	0	0	0	46	46	46	46	46	0	0	0	0	0	2
3	0	0	0	0	0	0	0	0	0	0	46	46	46	46	46	0	0	0	0	0	0	0	0	0	0	3
4	0	0	0	0	0	46	46	46	46	46	0	0	0	0	0	0	0	0	0	0	0	0	0	0	0	4
5	0	0	0	0	0	0	0	0	0	0	0	0	0	0	0	0	0	0	0	0	46	46	46	46	46	5
6	0	0	0	0	0	0	0	0	0	0	0	0	0	0	0	0	0	0	0	0	46	46	46	46	46	6
ID	1	1	1	1	1	76	76	76	76	76	105	105	105	105	105	131	131	131	131	131	30	30	30	30	30	ID
[DEG]	0~84.7	0~84.7	0~84.7	0~84.7	0~84.7	24~84.7	37~84.7	48~84.7	64~84.7	75~84.7	24~84.7	37~84.7	48~84.7	64~84.7	75~84.7	24~84.7	37~84.7	48~84.7	64~84.7	75~84.7	21~84.7	33~84.7	50~84.7	63~84.7	75~84.7	[DEG]
	1	1	1	1	1	1	1	1	1	1	1	1	1	1	1	1	1	1	1	1	1	1	1	1	1	
	8.7t	8.7t	8.7t	8.7t	8.7t	8.7t	8.7t	8.7t	8.7t	8.7t	8.7t	8.7t	8.7t	8.7t	8.7t	8.7t	8.7t	8.7t	8.7t	8.7t	8.7t	8.7t	8.7t	8.7t	8.7t	

m	18.8	18.8	18.8	18.8	18.8	18.8	18.8	18.8	18.8	18.8	18.8	18.8	18.8	18.8	18.8	22.6	22.6	22.6	22.6	22.6	26.3	26.3	26.3	26.3	26.3	m
°	5	15	30	45	60	5	15	30	45	60	5	15	30	45	60	5	15	30	45	60	5	15	30	45	60	°
3.0	7.3					7.3					7.3															3.0
3.5	7.3					7.3					7.3															3.5
4.0	7.3					7.3	7.3				7.3	7.3				7.3										4.0
4.5	7.3					7.3	7.3				7.3	7.3				7.3										4.5
5.0	7.3	7.3				7.3	7.3				7.3	7.3				7.3	7.3				7.3					5.0
6.0	7.3	7.3	7.3			7.3	7.3	7.3			7.3	7.3	7.3			7.3	7.3				7.3	7.3				6.0
7.0	7.3	7.3	7.3	6.9		7.3	7.3	7.3	6.9		7.3	7.3	7.3	6.9		7.3	7.3	7.3			7.3	7.3				7.0
8.0	7.3	7.3	7.3	6.6	5.0	7.3	7.3	7.3	6.6	5.0	7.3	7.3	7.3	6.6	5.0	7.3	7.3	7.3	6.8		7.3	7.3	7.3			8.0
9.0	7.3	7.3	7.3	6.4	4.9	7.3	7.3	7.3	6.4	4.9	7.3	7.3	7.3	6.4	4.9	7.3	7.3	7.3	6.6	5.0	7.3	7.3	7.3	6.7	5.0	9.0
10.0	7.3	7.3	7.3	6.3	4.9	7.3	7.3	7.3	6.3	4.9	7.3	7.3	7.3	6.3	4.9	7.3	7.3	7.3	6.4	4.9	7.3	7.3	7.3	6.5	4.9	10.0
11.0	7.3	7.3	7.3	6.1		7.3	7.3	7.3	6.1		7.3	7.3	7.3	6.1		7.3	7.3	7.3	6.3	4.8	7.3	7.3	7.3	6.4	4.9	11.0
12.0	7.3	7.3	7.2	6.0		7.3	7.3	7.2	6.0		7.3	7.3	7.2	6.0		7.3	7.3	7.3	6.1		7.3	7.3	7.3	6.3	4.8	12.0
14.0	7.3	7.3	6.7	5.7		7.3	7.3	6.7	5.7		7.3	7.3	6.7	5.7		7.2	6.9	6.5	5.9		6.8	7.3	7.3	6.0		14.0
16.0	7.1	7.1	6.3			6.7	7.0	6.3			6.3	6.6	6.3			6.4	6.1	5.9	5.7		4.8	5.2	5.8	5.8		16.0
18.0	5.5	5.7	6.0			5.2	5.4	5.6			4.7	4.9	5.2			5.7	5.5	5.3			3.3	3.6	4.1	4.4		18.0
20.0	4.3	4.5				4.0	4.1				3.5	3.7				4.8	5.0	4.9			2.1	2.4	2.8			20.0
22.0	3.4	3.5				3.0	3.1				2.6	2.7				3.8	4.0	4.1			1.2	1.4	1.7			22.0
24.0	2.6					2.3					1.8					3.1	3.2									24.0
26.0																2.4	2.5									26.0
28.0																										28.0
30.0																										30.0
32.0																										32.0
34.0																										34.0
36.0																										36.0
38.0																										38.0
40.0																										40.0
42.0																										42.0
44.0																										44.0
46.0																										46.0
48.0																										48.0
50.0																										50.0
52.0																										52.0
54.0																										54.0
56.0																										56.0
58.0																										58.0
60.0																										60.0
64.0																										64.0
1	0	0	0	0	0	0	0	0	0	0	0	0	0	0	0	0	0	0	0	0	92	92	92	92	92	1
2	0	0	0	0	0	0	0	0	0	0	46	46	46	46	46	0	0	0	0	0	92	92	92	92	92	2
3	0	0	0	0	0	46	46	46	46	46	46	46	46	46	46	0	0	0	0	0	0	0	0	0	0	3
4	46	46	46	46	46	46	46	46	46	46	0	0	0	0	0	0	0	0	0	0	0	0	0	0	0	4
5	46	46	46	46	46	0	0	0	0	0	0	0	0	0	0	46	46	46	46	46	0	0	0	0	0	5
6	0	0	0	0	0	0	0	0	0	0	0	0	0	0	0	92	92	92	92	92	0	0	0	0	0	6
ID	58	58	58	58	58	88	88	88	88	88	113	113	113	113	113	20	20	20	20	20	134	134	134	134	134	ID
[DEG]	20~84.7	33~84.7	50~84.7	63~84.7	75~84.7	20~84.7	32~84.7	50~84.7	63~84.7	75~84.7	20~84.7	32~84.7	50~84.7	63~84.7	75~84.7	28~84.7	30~84.7	46~84.7	63~84.7	76~84.7	48~84.7	50~84.7	52~84.7	62~84.7	76~84.7	[DEG]
	1	1	1	1	1	1	1	1	1	1	1	1	1	1	1	1	1	1	1	1	1	1	1	1	1	
	8.7t	8.7t	8.7t	8.7t	8.7t	8.7t	8.7t	8.7t	8.7t	8.7t	8.7t	8.7t	8.7t	8.7t	8.7t	8.7t	8.7t	8.7t	8.7t	8.7t	8.7t	8.7t	8.7t	8.7t	8.7t	

フルオートラフィングジブ

FLJ	1.6m + 7.4m	6.2 t	8.0m x 6.2m	360 °	JPN

m	30.0	30.0	30.0	30.0	30.0	30.0	30.0	30.0	30.0	30.0	33.7	33.7	33.7	33.7	33.7	37.4	37.4	37.4	37.4	37.4	37.4	37.4	37.4	37.4	37.4	m
°	5	15	30	45	60	5	15	30	45	60	5	15	30	45	60	5	15	30	45	60	5	15	30	45	60	°
3.0																										3.0
3.5																										3.5
4.0																										4.0
4.5																										4.5
5.0	7.3					7.3																				5.0
6.0	7.3	7.3				7.3	7.3				7.3															6.0
7.0	7.3	7.3				7.3	7.3				7.3	7.3				7.1					7.3					7.0
8.0	7.3	7.3	7.3			7.3	7.3	7.3			7.3	7.3				7.1	7.1				7.3	7.3				8.0
9.0	7.3	7.3	7.3			7.3	7.3	7.3	6.8		7.3	7.3	7.3			7.1	7.1				7.3	7.3				9.0
10.0	7.3	7.3	7.3	6.6	5.0	7.3	7.3	7.3	6.6	5.0	7.3	7.3	7.3	6.7		7.1	7.1	7.1			7.3	7.3	7.3			10.0
11.0	7.3	7.3	7.3	6.5	4.9	7.3	7.3	7.3	6.5	4.9	7.3	7.3	7.3	6.6	4.9	7.1	7.1	7.1	6.7	5.0	7.3	7.3	7.2	6.7		11.0
12.0	7.3	7.3	7.1	6.4	4.9	7.3	7.3	7.3	6.4	4.9	7.3	7.3	7.3	6.5	4.9	7.1	7.1	7.1	6.6	4.9	7.3	7.3	6.9	6.4	4.9	12.0
14.0	6.8	6.6	6.3	6.1		6.8	7.3	7.3	6.1		6.8	7.3	7.3	6.2	4.8	7.0	7.1	7.1	6.3	4.8	6.9	6.6	6.2	5.9	4.8	14.0
16.0	6.0	5.8	5.6	5.5		4.8	5.2	5.8	5.9		4.8	5.2	5.9	6.0		4.9	5.4	6.0	6.1		6.1	5.9	5.7	5.5		16.0
18.0	5.3	5.2	5.1	5.0		3.2	3.6	4.1	4.5		3.2	3.6	4.2	4.5		3.4	3.8	4.3	4.7		5.5	5.4	5.2	5.0		18.0
20.0	4.7	4.7	4.6	4.5		2.1	2.4	2.8	3.1		2.1	2.4	2.9	3.2		2.2	2.6	3.0	3.3		4.4	4.6	4.7	4.6		20.0
22.0	3.7	3.9	4.1				1.5	1.8					1.8	2.1				2.0	2.2		3.4	3.6	3.9	4.1		22.0
24.0	3.0	3.1	3.3																		2.7	2.8	3.1	3.2		24.0
26.0	2.3	2.4	2.6																		2.0	2.2	2.4			26.0
28.0	1.8	1.9																			1.5	1.6	1.8			28.0
30.0	1.3	1.4																			1.0	1.2	1.3			30.0
32.0	0.9	1.0																					0.9			32.0
34.0																										34.0
36.0																										36.0
38.0																										38.0
40.0																										40.0
42.0																										42.0
44.0																										44.0
46.0																										46.0
48.0																										48.0
50.0																										50.0
52.0																										52.0
54.0																										54.0
56.0																										56.0
58.0																										58.0
60.0																										60.0
64.0																										64.0
1	0	0	0	0	0	92	92	92	92	92	92	92	92	92	92	92	92	92	92	92	0	0	0	0	0	1
2	0	0	0	0	0	92	92	92	92	92	92	92	92	92	92	92	92	92	92	92	0	0	0	0	0	2
3	0	0	0	0	0	46	46	46	46	46	92	92	92	92	92	92	92	92	92	92	46	46	46	46	46	3
4	46	46	46	46	46	0	0	0	0	0	0	0	0	0	0	46	46	46	46	46	92	92	92	92	92	4
5	92	92	92	92	92	0	0	0	0	0	0	0	0	0	0	0	0	0	0	0	92	92	92	92	92	5
6	92	92	92	92	92	0	0	0	0	0	0	0	0	0	0	0	0	0	0	0	92	92	92	92	92	6
ID	22	22	22	22	22	116	116	116	116	116	110	110	110	110	110	93	93	93	93	93	24	24	24	24	24	ID
[DEG]	30~84.7	32~84.7	49~84.7	63~84.7	78~84.7	57~84.7	55~84.7	57~84.7	62~84.7	78~84.7	61~84.7	62~84.7	61~84.7	62~84.7	76~84.7	64~84.7	65~84.7	64~84.7	65~84.7	78~84.7	48~84.7	50~84.7	47~84.7	63~84.7	78~84.7	[DEG]
	1	1	1	1	1	1	1	1	1	1	1	1	1	1	1	1	1	1	1	1	1	1	1	1	1	
	8.7t	8.7t	8.7t	8.7t	8.7t	8.7t	8.7t	8.7t	8.7t	8.7t	8.7t	8.7t	8.7t	8.7t	8.7t	8.7t	8.7t	8.7t	8.7t	8.7t	8.7t	8.7t	8.7t	8.7t	8.7t	

m	41.2	41.2	41.2	41.2	41.2	44.9	44.9	44.9	44.9	44.9	44.9	44.9	44.9	44.9	44.9	48.6	48.6	48.6	48.6	48.6	48.6	48.6	48.6	48.6	48.6	m
°	5	15	30	45	60	5	15	30	45	60	5	15	30	45	60	5	15	30	45	60	5	15	30	45	60	°
3.0																										3.0
3.5																										3.5
4.0																										4.0
4.5																										4.5
5.0																										5.0
6.0																										6.0
7.0	7.3																									7.0
8.0	7.3										6.5															8.0
9.0	7.3	7.3				4.6					6.5					4.8					5.4					9.0
10.0	7.3	7.3	7.3			4.6	4.6				6.5	6.5				4.8					5.4					10.0
11.0	7.3	7.3	7.3			4.6	4.6				6.5	6.5	6.5			4.8	4.8				5.4	5.4				11.0
12.0	7.3	7.3	7.3	6.6	4.9	4.6	4.6	4.6			6.5	6.5	6.5			4.8	4.8	4.8			5.4	5.4	5.4			12.0
14.0	7.1	7.3	7.3	6.4	4.9	4.6	4.6	4.6	4.6	4.6	6.5	6.5	6.5	6.5	4.9	4.8	4.8	4.8	4.8	4.8	5.4	5.4	5.4	5.4	4.9	14.0
16.0	5.0	5.5	6.1	6.2		4.6	4.6	4.6	4.6	4.6	5.2	5.7	6.3	6.3	4.8	4.8	4.8	4.8	4.8	4.8	5.3	5.4	5.4	5.4	4.8	16.0
18.0	3.5	3.9	4.4	4.8		4.6	4.6	4.6	4.6		3.6	4.1	4.6	5.0		4.4	4.8	4.8	4.8		3.8	4.2	4.7	5.1		18.0
20.0		2.7	3.1	3.4		4.0	4.2	4.6	4.6			2.8	3.3	3.6		3.2	3.5	3.9	4.3			3.0	3.4	3.8		20.0
22.0				2.4		3.0	3.2	3.5	3.8					2.5		2.3	2.6	2.9	3.2					2.7		22.0
24.0						2.2	2.4	2.7	2.9									2.1	2.3							24.0
26.0						1.6	1.8	2.0	2.2																	26.0
28.0								1.4	1.6																	28.0
30.0																										30.0
32.0																										32.0
34.0																										34.0
36.0																										36.0
38.0																										38.0
40.0																										40.0
42.0																										42.0
44.0																										44.0
46.0																										46.0
48.0																										48.0
50.0																										50.0
52.0																										52.0
54.0																										54.0
56.0																										56.0
58.0																										58.0
60.0																										60.0
64.0																										64.0
1	92	92	92	92	92	0	0	0	0	0	92	92	92	92	92	46	46	46	46	46	92	92	92	92	92	1
2	92	92	92	92	92	46	46	46	46	46	92	92	92	92	92	92	92	92	92	92	92	92	92	92	92	2
3	92	92	92	92	92	92	92	92	92	92	92	92	92	92	92	92	92	92	92	92	92	92	92	92	92	3
4	92	92	92	92	92	92	92	92	92	92	92	92	92	92	92	92	92	92	92	92	92	92	92	92	92	4
5	0	0	0	0	0	92	92	92	92	92	46	46	46	46	46	92	92	92	92	92	92	92	92	92	92	5
6	0	0	0	0	0	92	92	92	92	92	0	0	0	0	0	46	46	46	46	46	0	0	0	0	0	6
ID	83	83	83	83	83	26	26	26	26	26	65	65	65	65	65	38	38	38	38	38	49	49	49	49	49	ID
[DEG]	69~84.7	67~84.7	69~84.7	68~84.7	79~84.7	61~84.7	62~84.7	61~84.7	62~84.7	78~84.7	71~84.7	69~84.7	71~84.7	70~84.7	78~84.7	68~84.7	69~84.7	68~84.7	69~84.7	79~84.7	72~84.7	71~84.7	73~84.7	72~84.7	79~84.7	[DEG]
	1	1	1	1	1	1	1	1	1	1	1	1	1	1	1	1	1	1	1	1	1	1	1	1	1	
	8.7t	8.7t	8.7t	8.7t	8.7t	8.7t	8.7t	8.7t	8.7t	8.7t	8.7t	8.7t	8.7t	8.7t	8.7t	8.7t	8.7t	8.7t	8.7t	8.7t	8.7t	8.7t	8.7t	8.7t	8.7t	

FLJ	1.6m + 7.4m	6.2 t	8.0m x 6.2m	360 °	JPN

m	52.3	52.3	52.3	52.3	52.3	52.3	52.3	52.3	52.3	52.3	56.0	56.0	56.0	56.0	56.0	60.0	60.0	60.0	60.0	60.0	m
°	5	15	30	45	60	5	15	30	45	60	5	15	30	45	60	5	15	30	45	60	°
3.0																					3.0
3.5																					3.5
4.0																					4.0
4.5																					4.5
5.0																					5.0
6.0																					6.0
7.0																					7.0
8.0																					8.0
9.0																					9.0
10.0	3.9					4.4															10.0
11.0	3.9					4.4					3.7										11.0
12.0	3.9	3.9				4.4	4.4				3.7										12.0
14.0	3.9	3.9	3.9			4.4	4.4	4.4			3.7	3.7	3.7			3.2	3.2				14.0
16.0	3.9	3.9	3.9	3.9	3.9	4.4	4.4	4.4	4.4	4.4	3.7	3.7	3.7	3.7	3.7	3.2	3.2	3.2	3.2		16.0
18.0	3.9	3.9	3.9	3.9	3.9	4.0	4.4	4.4	4.4	4.4	3.7	3.7	3.7	3.7	3.7	3.2	3.2	3.2	3.2	3.2	18.0
20.0	3.4	3.7	3.9	3.9			3.2	3.6	4.0			3.3	3.7	3.7				3.2	3.2	3.2	20.0
22.0	2.4	2.7	3.1	3.3					2.9					3.0							22.0
24.0			2.2	2.5																	24.0
26.0																					26.0
28.0																					28.0
30.0																					30.0
32.0																					32.0
34.0																					34.0
36.0																					36.0
38.0																					38.0
40.0																					40.0
42.0																					42.0
44.0																					44.0
46.0																					46.0
48.0																					48.0
50.0																					50.0
52.0																					52.0
54.0																					54.0
56.0																					56.0
58.0																					58.0
60.0																					60.0
64.0																					64.0
1	46	46	46	46	46	92	92	92	92	92	92	92	92	92	92	100	100	100	100	100	1
2	92	92	92	92	92	92	92	92	92	92	92	92	92	92	92	100	100	100	100	100	2
3	92	92	92	92	92	92	92	92	92	92	92	92	92	92	92	100	100	100	100	100	3
4	92	92	92	92	92	92	92	92	92	92	92	92	92	92	92	100	100	100	100	100	4
5	92	92	92	92	92	92	92	92	92	92	92	92	92	92	92	100	100	100	100	100	5
6	92	92	92	92	92	46	46	46	46	46	92	92	92	92	92	100	100	100	100	100	6
ID	28	28	28	28	28	39	39	39	39	39	29	29	29	29	29	19	19	19	19	19	ID
[DEG]	70~84.7	71~84.7	70~84.7	71~84.7	78~84.7	74~84.7	73~84.7	74~84.7	73~84.7	78~84.7	75~84.7	74~84.7	76~84.7	75~84.7	79~84.7	76~84.7	77~84.7	77~84.7	78~84.7	79~84.7	[DEG]
	1	1	1	1	1	1	1	1	1	1	1	1	1	1	1	1	1	1	1	1	
	8.7t	8.7t	8.7t	8.7t	8.7t	8.7t	8.7t	8.7t	8.7t	8.7t	8.7t	8.7t	8.7t	8.7t	8.7t	8.7t	8.7t	8.7t	8.7t	8.7t	

FLJ	1.6m + 12.4m	6.2 t	8.0m x 6.2m	360 °	JPN

m	11.4	11.4	11.4	11.4	11.4	15.1	15.1	15.1	15.1	15.1	15.1	15.1	15.1	15.1	15.1	15.1	15.1	15.1	15.1	15.1	18.8	18.8	18.8	18.8	18.8	m
°	5	15	30	45	60	5	15	30	45	60	5	15	30	45	60	5	15	30	45	60	5	15	30	45	60	°
3.0	4.3																									3.0
3.5	4.3																									3.5
4.0	4.3					4.3					4.3					4.3					4.3					4.0
4.5	4.3					4.3					4.3					4.3					4.3					4.5
5.0	4.3					4.3					4.3					4.3					4.3					5.0
6.0	4.3	4.3				4.3	4.3				4.3	4.3				4.3	4.3				4.3					6.0
7.0	4.3	4.3				4.3	4.3				4.3	4.3				4.3	4.3				4.3	4.3				7.0
8.0	4.3	4.3				4.3	4.3				4.3	4.3				4.3	4.3				4.3	4.3				8.0
9.0	4.3	4.3	4.3			4.3	4.3	4.3			4.3	4.3	4.3			4.3	4.3	4.3			4.3	4.3				9.0
10.0	4.3	4.3	4.1			4.3	4.3	4.3			4.3	4.3	4.3			4.3	4.3	4.3			4.3	4.3	4.3			10.0
11.0	4.3	4.3	3.9	3.2		4.3	4.3	4.1	3.3		4.3	4.3	4.1	3.3		4.3	4.3	4.1	3.3		4.3	4.3	4.1			11.0
12.0	4.3	4.3	3.7	3.1		4.3	4.3	3.9	3.2		4.3	4.3	3.9	3.2		4.3	4.3	3.9	3.2		4.3	4.3	3.9	3.3		12.0
14.0	4.3	4.0	3.3	2.9		4.3	4.3	3.5	3.0		4.3	4.3	3.5	3.0		4.3	4.3	3.5	3.0		4.3	4.3	3.7	3.1		14.0
16.0	3.8	3.5	3.0	2.7		4.3	3.9	3.3	2.8		4.3	3.9	3.3	2.8		4.3	3.9	3.3	2.8		4.3	4.1	3.4	2.9		16.0
18.0	3.4	3.2	2.8			3.9	3.6	3.0	2.7		3.9	3.6	3.0	2.7		3.9	3.6	3.0	2.7		4.3	3.8	3.2	2.8		18.0
20.0	3.0	2.9				3.5	3.3	2.9			3.5	3.3	2.9			3.5	3.3	2.9			4.0	3.5	3.0	2.7		20.0
22.0	2.7					3.2	3.0				3.2	3.0				3.2	3.0				3.6	3.3	2.9			22.0
24.0						2.9	2.8				2.9	2.8				2.9	2.8				3.3	3.1	2.8			24.0
26.0																					3.0	2.9				26.0
28.0																					2.5					28.0
30.0																										30.0
32.0																										32.0
34.0																										34.0
36.0																										36.0
38.0																										38.0
40.0																										40.0
42.0																										42.0
44.0																										44.0
46.0																										46.0
48.0																										48.0
50.0																										50.0
52.0																										52.0
54.0																										54.0
56.0																										56.0
58.0																										58.0
60.0																										60.0
64.0																										64.0
1	0	0	0	0		0	0	0	0		0	0	0	0		0	0	0	0		0	0	0	0		1
2	0	0	0	0		0	0	0	0		0	0	0	0		46	46	46	46		0	0	0	0		2
3	0	0	0	0		0	0	0	0		46	46	46	46		0	0	0	0		0	0	0	0		3
4	0	0	0	0		46	46	46	46		0	0	0	0		0	0	0	0		0	0	0	0		4
5	0	0	0	0		0	0	0	0		0	0	0	0		0	0	0	0		46	46	46	46		5
6	0	0	0	0		0	0	0	0		0	0	0	0		0	0	0	0		46	46	46	46		6
ID	1	1	1	1		76	76	76	76		105	105	105	105		131	131	131	131		30	30	30	30		ID
[DEG]	0~84.7	0~84.7	0~84.7	0~84.7		29~84.7	32~84.7	51~84.7	60~84.7		29~84.7	31~84.7	51~84.7	60~84.7		29~84.7	31~84.7	51~84.7	60~84.7		26~84.7	37~84.7	46~84.7	60~84.7		[DEG]
	1	1	1	1		1	1	1	1		1	1	1	1		1	1	1	1		1	1	1	1		
	8.7t	8.7t	8.7t	8.7t		8.7t	8.7t	8.7t	8.7t		8.7t	8.7t	8.7t	8.7t		8.7t	8.7t	8.7t	8.7t		8.7t	8.7t	8.7t	8.7t		

フルオートラフィングジブ

FLJ	1.6m + 12.4m	6.2 t	8.0m x 6.2m	360 °	JPN

m	18.8	18.8	18.8	18.8	18.8	18.8	18.8	18.8	18.8	18.8	18.8	18.8	18.8	18.8	18.8	22.6	22.6	22.6	22.6	22.6	26.3	26.3	26.3	26.3	26.3	m
°	5	15	30	45	60	5	15	30	45	60	5	15	30	45	60	5	15	30	45	60	5	15	30	45	60	°
m 3.0																										3.0
3.5																										3.5
4.0	4.3					4.3					4.3															4.0
4.5	4.3					4.3					4.3															4.5
5.0	4.3					4.3					4.3					4.3										5.0
6.0	4.3					4.3					4.3					4.3					4.3					6.0
7.0	4.3	4.3				4.3	4.3				4.3	4.3				4.3	4.3				4.3					7.0
8.0	4.3	4.3				4.3	4.3				4.3	4.3				4.3	4.3				4.3	4.3				8.0
9.0	4.3	4.3				4.3	4.3				4.3	4.3				4.3	4.3				4.3	4.3				9.0
10.0	4.3	4.3	4.3			4.3	4.3	4.3			4.3	4.3	4.3			4.3	4.3				4.3	4.3				10.0
11.0	4.3	4.3	4.1			4.3	4.3	4.2			4.3	4.3	4.2			4.3	4.3	4.1			4.3	4.3	4.3			11.0
12.0	4.3	4.3	4.0	3.3		4.3	4.3	4.0	3.3		4.3	4.3	4.0	3.3		4.3	4.3	4.0			4.3	4.3	4.2			12.0
14.0	4.3	4.3	3.7	3.1		4.3	4.3	3.7	3.1		4.3	4.3	3.7	3.1		4.3	4.3	3.7	3.1		4.3	4.3	3.9	3.2	2.7	14.0
16.0	4.3	4.1	3.5	2.9		4.3	4.2	3.5	2.9		4.3	4.2	3.5	2.9		4.3	4.2	3.5	3.0		4.3	4.3	3.7	3.0	2.6	16.0
18.0	4.3	3.8	3.2	2.8		4.3	3.8	3.2	2.8		4.3	3.9	3.2	2.8		4.3	3.9	3.3	2.9		4.3	4.2	3.5	2.9		18.0
20.0	4.0	3.6	3.0	2.7		4.0	3.6	3.0	2.7		4.0	3.6	3.0	2.7		4.2	3.7	3.1	2.8		3.1	3.6	3.3	2.8		20.0
22.0	3.6	3.3	2.9			3.6	3.3	2.9			3.6	3.3	2.9			3.9	3.4	3.0			2.2	2.6	3.2	2.7		22.0
24.0	3.3	3.1	2.8			3.1	3.1	2.8			2.8	3.0	2.8			3.6	3.3	2.9			1.4	1.8	2.3			24.0
26.0	2.8	2.9				2.5	2.6				2.1	2.3				3.1	3.1	2.8				1.1	1.5			26.0
28.0	2.2					1.9					1.6					2.5	2.7									28.0
30.0																2.1	2.2									30.0
32.0																1.7										32.0
34.0																										34.0
36.0																										36.0
38.0																										38.0
40.0																										40.0
42.0																										42.0
44.0																										44.0
46.0																										46.0
48.0																										48.0
50.0																										50.0
52.0																										52.0
54.0																										54.0
56.0																										56.0
58.0																										58.0
60.0																										60.0
64.0																										64.0
% 1	0	0	0	0		0	0	0	0		0	0	0	0		0	0	0	0		92	92	92	92	92	1
% 2	0	0	0	0		0	0	0	0		46	46	46	46		0	0	0	0		92	92	92	92	92	2
% 3	0	0	0	0		46	46	46	46		46	46	46	46		0	0	0	0		0	0	0	0	0	3
% 4	46	46	46	46		46	46	46	46		0	0	0	0		0	0	0	0		0	0	0	0	0	4
% 5	46	46	46	46		0	0	0	0		0	0	0	0		46	46	46	46		0	0	0	0	0	5
% 6	0	0	0	0		0	0	0	0		0	0	0	0		92	92	92	92		0	0	0	0	0	6
ID	58	58	58	58		88	88	88	88		113	113	113	113		20	20	20	20		134	134	134	134	134	ID
[DEG]	26~84.7	37~84.7	46~84.7	60~84.7		25~84.7	36~84.7	46~84.7	60~84.7		25~84.7	36~84.7	46~84.7	60~84.7		23~84.7	34~84.7	49~84.7	65~84.7		52~84.7	51~84.7	54~84.7	64~84.7	77~84.7	[DEG]
	1	1	1	1		1	1	1	1		1	1	1	1		1	1	1	1		1	1	1	1	1	
	8.7t	8.7t	8.7t	8.7t		8.7t	8.7t	8.7t	8.7t		8.7t	8.7t	8.7t	8.7t		8.7t	8.7t	8.7t	8.7t		8.7t	8.7t	8.7t	8.7t	8.7t	

m	30.0	30.0	30.0	30.0	30.0	30.0	30.0	30.0	30.0	30.0	33.7	33.7	33.7	33.7	33.7	37.4	37.4	37.4	37.4	37.4	37.4	37.4	37.4	37.4	37.4	m
°	5	15	30	45	60	5	15	30	45	60	5	15	30	45	60	5	15	30	45	60	5	15	30	45	60	°
m 3.0																										3.0
3.5																										3.5
4.0																										4.0
4.5																										4.5
5.0																										5.0
6.0	4.0					4.3																				6.0
7.0	4.0					4.3					4.3					4.1										7.0
8.0	4.0					4.3					4.3					4.1					4.3					8.0
9.0	4.0	4.0				4.3	4.3				4.3	4.3				4.1					4.3					9.0
10.0	4.0	4.0				4.3	4.3				4.3	4.3				4.1	4.1				4.3	4.3				10.0
11.0	4.0	4.0				4.3	4.3	4.3			4.3	4.3				4.1	4.1				4.3	4.3				11.0
12.0	4.0	4.0	4.0			4.3	4.3	4.2			4.3	4.3	4.2			4.1	4.1				4.3	4.3				12.0
14.0	4.0	4.0	3.7	3.2		4.3	4.3	3.9	3.2		4.3	4.3	3.9	3.3		4.1	4.1	3.9			4.3	4.3	3.7			14.0
16.0	4.0	4.0	3.5	3.1		4.3	4.3	3.7	3.1		4.3	4.3	3.7	3.2	2.6	4.1	4.1	3.7	3.2	2.6	4.3	4.3	3.5	3.1		16.0
18.0	4.0	4.0	3.4	3.0		4.3	4.3	3.5	3.0		4.2	4.3	3.6	3.0	2.6	4.1	4.1	3.6	3.1	2.6	4.3	4.1	3.4	3.0		18.0
20.0	4.0	3.8	3.2	2.9		3.1	3.6	3.4	2.9		3.0	3.5	3.4	2.9		3.0	3.6	3.4	3.0		4.3	3.9	3.2	2.9		20.0
22.0	4.0	3.6	3.1	2.8		2.1	2.6	3.2	2.8		2.1	2.5	3.2	2.8		2.1	2.6	3.2	2.9		4.0	3.7	3.1	2.8		22.0
24.0	3.5	3.4	3.0	2.7		1.4	1.8	2.3	2.6			1.7	2.3	2.7				2.3	2.8		3.2	3.5	3.0	2.7		24.0
26.0	2.9	3.1	2.9					1.5					1.5	1.8					1.9		2.6	2.8	2.9	2.7		26.0
28.0	2.3	2.5	2.8																		2.0	2.2	2.5	2.6		28.0
30.0	1.9	2.0	2.2																		1.5	1.7	2.0			30.0
32.0	1.5	1.6	1.8																		1.1	1.3	1.5			32.0
34.0	1.1	1.2																				1.0	1.1			34.0
36.0		0.9																								36.0
38.0																										38.0
40.0																										40.0
42.0																										42.0
44.0																										44.0
46.0																										46.0
48.0																										48.0
50.0																										50.0
52.0																										52.0
54.0																										54.0
56.0																										56.0
58.0																										58.0
60.0																										60.0
64.0																										64.0
% 1	0	0	0	0		92	92	92	92		92	92	92	92	92	92	92	92	92	92	0	0	0	0		1
% 2	0	0	0	0		92	92	92	92		92	92	92	92	92	92	92	92	92	92	0	0	0	0		2
% 3	0	0	0	0		46	46	46	46		92	92	92	92	92	92	92	92	92	92	46	46	46	46		3
% 4	46	46	46	46		0	0	0	0		0	0	0	0	0	46	46	46	46	46	92	92	92	92		4
% 5	92	92	92	92		0	0	0	0		0	0	0	0	0	0	0	0	0	0	92	92	92	92		5
% 6	92	92	92	92		0	0	0	0		0	0	0	0	0	0	0	0	0	0	92	92	92	92		6
ID	22	22	22	22		116	116	116	116		110	110	110	110	110	93	93	93	93	93	24	24	24	24		ID
[DEG]	38~84.7	34~84.7	47~84.7	64~84.7		56~84.7	59~84.7	58~84.7	64~84.7		62~84.7	62~84.7	62~84.7	63~84.7	77~84.7	65~84.7	67~84.7	67~84.7	66~84.7	79~84.7	52~84.7	51~84.7	53~84.7	64~84.7		[DEG]
	1	1	1	1		1	1	1	1		1	1	1	1	1	1	1	1	1	1	1	1	1	1		
	8.7t	8.7t	8.7t	8.7t		8.7t	8.7t	8.7t	8.7t		8.7t	8.7t	8.7t	8.7t	8.7t	8.7t	8.7t	8.7t	8.7t	8.7t	8.7t	8.7t	8.7t	8.7t		

FLJ	1.6m + 12.4m	6.2 t	8.0m x 6.2m	360 °	JPN

m	41.2	41.2	41.2	41.2	41.2	44.9	44.9	44.9	44.9	44.9	44.9	44.9	44.9	44.9	44.9	48.6	48.6	48.6	48.6	48.6	48.6	48.6	48.6	48.6	48.6	m
°	5	15	30	45	60	5	15	30	45	60	5	15	30	45	60	5	15	30	45	60	5	15	30	45	60	°
3.0																										3.0
3.5																										3.5
4.0																										4.0
4.5																										4.5
5.0																										5.0
6.0																										6.0
7.0																										7.0
8.0	4.3																									8.0
9.0	4.3										4.0															9.0
10.0	4.3					3.0					4.0					3.2					3.6					10.0
11.0	4.3	4.3				3.0					4.0	4.0				3.2					3.6					11.0
12.0	4.3	4.3				3.0	3.0				4.0	4.0				3.2	3.2				3.6	3.6				12.0
14.0	4.3	4.3	3.9			3.0	3.0				4.0	4.0				3.2	3.2				3.6	3.6				14.0
16.0	4.3	4.3	3.7	3.2		3.0	3.0	3.0			4.0	4.0	3.7			3.2	3.2	3.2			3.6	3.6	3.6			16.0
18.0	4.3	4.3	3.5	3.1	2.6	3.0	3.0	3.0	2.9		4.0	4.0	3.5	3.0	2.6	3.2	3.2	3.2	3.0		3.6	3.6	3.5	3.0		18.0
20.0	3.1	3.6	3.4	3.0	2.6	3.0	3.0	3.0	2.9		3.2	3.8	3.4	2.9	2.6	3.2	3.2	3.2	2.9	2.6	3.3	3.6	3.3	2.9	2.6	20.0
22.0		2.6	3.3	2.9		3.0	3.0	3.0	2.8			2.7	3.2	2.9		2.9	3.2	3.2	2.8	2.5		2.8	3.2	2.8	2.5	22.0
24.0			2.4	2.8		2.8	3.0	3.0	2.7				2.5	2.8		2.1	2.5	3.0	2.7				2.6	2.8		24.0
26.0				2.0		2.1	2.4	2.8	2.6					2.1				2.3	2.6					2.3		26.0
28.0						1.6	1.8	2.2	2.5										2.0							28.0
30.0							1.4	1.7	1.9																	30.0
32.0								1.2	1.4																	32.0
34.0																										34.0
36.0																										36.0
38.0																										38.0
40.0																										40.0
42.0																										42.0
44.0																										44.0
46.0																										46.0
48.0																										48.0
50.0																										50.0
52.0																										52.0
54.0																										54.0
56.0																										56.0
58.0																										58.0
60.0																										60.0
64.0																										64.0
1	92	92	92	92	92	0	0	0	0		92	92	92	92	92	46	46	46	46	46	92	92	92	92	92	1
2	92	92	92	92	92	46	46	46	46		92	92	92	92	92	92	92	92	92	92	92	92	92	92	92	2
3	92	92	92	92	92	92	92	92	92		92	92	92	92	92	92	92	92	92	92	92	92	92	92	92	3
4	92	92	92	92	92	92	92	92	92		92	92	92	92	92	92	92	92	92	92	92	92	92	92	92	4
5	0	0	0	0	0	92	92	92	92		46	46	46	46	46	92	92	92	92	92	92	92	92	92	92	5
6	0	0	0	0	0	92	92	92	92		0	0	0	0	0	46	46	46	46	46	0	0	0	0	0	6
ID	83	83	83	83	83	26	26	26	26		65	65	65	65	65	38	38	38	38	38	49	49	49	49	49	ID
[DEG]	70~84.7	69~84.7	70~84.7	69~84.7	78~84.7	63~84.7	62~84.7	62~84.7	64~84.7		71~84.7	71~84.7	72~84.7	71~84.7	79~84.7	69~84.7	71~84.7	71~84.7	70~84.7	78~84.7	73~84.7	73~84.7	73~84.7	73~84.7	78~84.7	[DEG]
	1	1	1	1	1	1	1	1	1		1	1	1	1	1	1	1	1	1	1	1	1	1	1	1	
	8.7t	8.7t	8.7t	8.7t	8.7t	8.7t	8.7t	8.7t	8.7t		8.7t	8.7t	8.7t	8.7t	8.7t	8.7t	8.7t	8.7t	8.7t	8.7t	8.7t	8.7t	8.7t	8.7t	8.7t	

m	52.3	52.3	52.3	52.3	52.3	52.3	52.3	52.3	52.3	52.3	56.0	56.0	56.0	56.0	56.0	60.0	60.0	60.0	60.0	60.0						m
°	5	15	30	45	60	5	15	30	45	60	5	15	30	45	60	5	15	30	45	60						°
3.0																										3.0
3.5																										3.5
4.0																										4.0
4.5																										4.5
5.0																										5.0
6.0																										6.0
7.0																										7.0
8.0																										8.0
9.0																										9.0
10.0																										10.0
11.0	2.7					3.0																				11.0
12.0	2.7					3.0					2.6															12.0
14.0	2.7	2.7				3.0	3.0				2.6	2.6				1.9										14.0
16.0	2.7	2.7	2.7			3.0	3.0	3.0			2.6	2.6				1.9	1.9									16.0
18.0	2.7	2.7	2.7			3.0	3.0	3.0			2.6	2.6	2.6			1.9	1.9	1.9								18.0
20.0	2.7	2.7	2.7	2.7	2.6	3.0	3.0	3.0	2.9	2.6	2.6	2.6	2.6	2.6			1.9	1.9	1.9							20.0
22.0	2.7	2.7	2.7	2.7	2.5		3.0	3.0	2.8	2.5		2.6	2.6	2.6	2.5			1.9	1.9	1.9						22.0
24.0	2.2	2.6	2.7	2.7				2.7	2.7				2.6	2.6	2.5				1.9	1.9						24.0
26.0			2.4	2.6					2.4					2.5												26.0
28.0				2.1																						28.0
30.0																										30.0
32.0																										32.0
34.0																										34.0
36.0																										36.0
38.0																										38.0
40.0																										40.0
42.0																										42.0
44.0																										44.0
46.0																										46.0
48.0																										48.0
50.0																										50.0
52.0																										52.0
54.0																										54.0
56.0																										56.0
58.0																										58.0
60.0																										60.0
64.0																										64.0
1	46	46	46	46	46	92	92	92	92	92	92	92	92	92	92	100	100	100	100	100						1
2	92	92	92	92	92	92	92	92	92	92	92	92	92	92	92	100	100	100	100	100						2
3	92	92	92	92	92	92	92	92	92	92	92	92	92	92	92	100	100	100	100	100						3
4	92	92	92	92	92	92	92	92	92	92	92	92	92	92	92	100	100	100	100	100						4
5	92	92	92	92	92	92	92	92	92	92	92	92	92	92	92	100	100	100	100	100						5
6	92	92	92	92	92	46	46	46	46	46	92	92	92	92	92	100	100	100	100	100						6
ID	28	28	28	28	28	39	39	39	39	39	29	29	29	29	29	19	19	19	19	19						ID
[DEG]	70~84.7	72~84.7	73~84.7	72~84.7	79~84.7	74~84.7	74~84.7	75~84.7	74~84.7	79~84.7	75~84.7	75~84.7	76~84.7	76~84.7	79~84.7	77~84.7	78~84.7	78~84.7	78~84.7	79~84.7						[DEG]
	1	1	1	1	1	1	1	1	1	1	1	1	1	1	1	1	1	1	1	1						
	8.7t	8.7t	8.7t	8.7t	8.7t	8.7t	8.7t	8.7t	8.7t	8.7t	8.7t	8.7t	8.7t	8.7t	8.7t	8.7t	8.7t	8.7t	8.7t	8.7t						

フルオートラフィングジブ

FLJ	1.6m + 17.4m	6.2 t	8.0m x 6.2m	360 °	JPN

m	11.4	11.4	11.4	11.4	11.4	15.1	15.1	15.1	15.1	15.1	15.1	15.1	15.1	15.1	15.1	15.1	15.1	15.1	15.1	15.1	18.8	18.8	18.8	18.8	18.8	m
°	5	15	30	45	60	5	15	30	45	60	5	15	30	45	60	5	15	30	45	60	5	15	30	45	60	°
m 3.0																										3.0
3.5																										3.5
4.0																										4.0
4.5	3.3																									4.5
5.0	3.3					3.1					3.3					3.3										5.0
6.0	3.3					3.1					3.3					3.3					2.7					6.0
7.0	3.3					3.1					3.3					3.3					2.7					7.0
8.0	3.3	3.3				3.1					3.3					3.3					2.7					8.0
9.0	3.3	3.3				3.1	3.1				3.3	3.3				3.3	3.3				2.7	2.7				9.0
10.0	3.3	3.2				3.1	3.1				3.3	3.3				3.3	3.3				2.7	2.7				10.0
11.0	3.3	3.0				3.1	3.1				3.3	3.1				3.3	3.1				2.7	2.7				11.0
12.0	3.2	2.9	2.5			3.1	2.9				3.3	2.9				3.3	3.0				2.7	2.7				12.0
14.0	2.9	2.6	2.3			3.1	2.7	2.3			3.1	2.7	2.3			3.1	2.7	2.3			2.7	2.7	2.3			14.0
16.0	2.6	2.4	2.1	1.8		2.8	2.5	2.2	1.9		2.8	2.5	2.2	1.9		2.8	2.5	2.2	1.9		2.7	2.5	2.2			16.0
18.0	2.4	2.2	1.9	1.7		2.6	2.3	2.0	1.8		2.6	2.3	2.0	1.8		2.6	2.3	2.0	1.8		2.7	2.4	2.0	1.8		18.0
20.0	2.2	2.0	1.8	1.6		2.4	2.1	1.9	1.7		2.4	2.1	1.9	1.7		2.4	2.1	1.9	1.7		2.5	2.2	1.9	1.7		20.0
22.0	2.0	1.9	1.7			2.2	2.0	1.8	1.6		2.2	2.0	1.8	1.6		2.2	2.0	1.8	1.6		2.3	2.1	1.8	1.6		22.0
24.0	1.8	1.7				2.1	1.9	1.7			2.1	1.9	1.7			2.1	1.9	1.7			2.2	2.0	1.8	1.6		24.0
26.0	1.7	1.6				1.9	1.8	1.6			1.9	1.8	1.6			1.9	1.8	1.6			2.0	1.9	1.7			26.0
28.0						1.8	1.6				1.8	1.6				1.8	1.6				1.9	1.8	1.6			28.0
30.0						1.6					1.6					1.6					1.9	1.7				30.0
32.0																					1.7	1.6				32.0
34.0																					1.6					34.0
36.0																										36.0
38.0																										38.0
40.0																										40.0
42.0																										42.0
44.0																										44.0
46.0																										46.0
48.0																										48.0
50.0																										50.0
52.0																										52.0
54.0																										54.0
56.0																										56.0
58.0																										58.0
60.0																										60.0
64.0																										64.0
% 1	0	0	0	0		0	0	0	0		0	0	0	0		0	0	0	0		0	0	0	0		1
2	0	0	0	0		0	0	0	0		0	0	0	0		46	46	46	46		0	0	0	0		2
3	0	0	0	0		0	0	0	0		46	46	46	46		0	0	0	0		0	0	0	0		3
4	0	0	0	0		46	46	46	46		0	0	0	0		0	0	0	0		0	0	0	0		4
5	0	0	0	0		0	0	0	0		0	0	0	0		0	0	0	0		46	46	46	46		5
6	0	0	0	0		0	0	0	0		0	0	0	0		0	0	0	0		46	46	46	46		6
ID	1	1	1	1		76	76	76	76		105	105	105	105		131	131	131	131		30	30	30	30		ID
[DEG]	0~84.7	0~84.7	0~84.7	0~84.7		23~84.7	36~84.7	47~84.7	63~84.7		23~84.7	36~84.7	47~84.7	63~84.7		23~84.7	36~84.7	47~84.7	63~84.7		21~84.7	33~84.7	49~84.7	63~84.7		[DEG]
	1	1	1	1		1	1	1	1		1	1	1	1		1	1	1	1		1	1	1	1		
	8.7t	8.7t	8.7t	8.7t		8.7t	8.7t	8.7t	8.7t		8.7t	8.7t	8.7t	8.7t		8.7t	8.7t	8.7t	8.7t		8.7t	8.7t	8.7t	8.7t		

m	18.8	18.8	18.8	18.8	18.8	18.8	18.8	18.8	18.8	18.8	18.8	18.8	18.8	18.8	18.8	22.6	22.6	22.6	22.6	22.6	26.3	26.3	26.3	26.3	26.3	m
°	5	15	30	45	60	5	15	30	45	60	5	15	30	45	60	5	15	30	45	60	5	15	30	45	60	°
m 3.0																										3.0
3.5																										3.5
4.0																										4.0
4.5																										4.5
5.0																										5.0
6.0	2.9					3.2					3.3					2.5										6.0
7.0	2.9					3.2					3.3					2.5					3.3					7.0
8.0	2.9					3.2					3.3					2.5					3.3					8.0
9.0	2.9	2.9				3.2	3.2				3.3	3.3				2.5					3.3					9.0
10.0	2.9	2.9				3.2	3.2				3.3	3.3				2.5	2.5				3.3	3.3				10.0
11.0	2.9	2.9				3.2	3.2				3.3	3.2				2.5	2.5				3.3	3.3				11.0
12.0	2.9	2.9				3.2	3.0				3.3	3.0				2.5	2.5				3.3	3.2				12.0
14.0	2.9	2.8	2.3			3.2	2.8	2.3			3.2	2.8	2.3			2.5	2.5	2.3			3.3	2.9	2.4			14.0
16.0	2.9	2.5	2.2	1.9		2.9	2.6	2.2	1.9		3.0	2.6	2.2	1.9		2.5	2.5	2.2			3.2	2.7	2.2			16.0
18.0	2.7	2.4	2.1	1.8		2.7	2.4	2.1	1.8		2.7	2.4	2.1	1.8		2.5	2.4	2.1	1.8		3.0	2.5	2.1	1.9		18.0
20.0	2.5	2.2	1.9	1.7		2.5	2.2	1.9	1.7		2.5	2.2	2.0	1.7		2.5	2.3	1.9	1.7		2.8	2.4	2.0	1.8		20.0
22.0	2.3	2.1	1.9	1.6		2.3	2.1	1.9	1.6		2.4	2.1	1.9	1.6		2.4	2.1	1.9	1.7		2.6	2.3	1.9	1.7		22.0
24.0	2.2	2.0	1.8	1.6		2.2	2.0	1.8	1.6		2.2	2.0	1.8	1.6		2.3	2.0	1.8	1.6		2.2	2.1	1.9	1.6		24.0
26.0	2.1	1.9	1.7			2.1	1.9	1.7			2.1	1.9	1.7			2.1	1.9	1.7	1.5		1.6	2.0	1.8	1.6		26.0
28.0	1.9	1.8	1.6			2.0	1.8	1.6			2.0	1.8	1.6			2.0	1.8	1.7			1.0	1.4	1.7	1.5		28.0
30.0	1.9	1.7				1.9	1.7				1.8	1.7				1.9	1.8	1.6				0.9	1.3			30.0
32.0	1.7	1.6				1.7	1.6				1.4	1.5				1.8	1.7									32.0
34.0	1.6					1.3					1.0					1.8	1.6									34.0
36.0																1.5										36.0
38.0																										38.0
40.0																										40.0
42.0																										42.0
44.0																										44.0
46.0																										46.0
48.0																										48.0
50.0																										50.0
52.0																										52.0
54.0																										54.0
56.0																										56.0
58.0																										58.0
60.0																										60.0
64.0																										64.0
% 1	0	0	0	0		0	0	0	0		0	0	0	0		0	0	0	0		92	92	92	92		1
2	0	0	0	0		0	0	0	0		46	46	46	46		0	0	0	0		92	92	92	92		2
3	0	0	0	0		46	46	46	46		46	46	46	46		0	0	0	0		0	0	0	0		3
4	46	46	46	46		46	46	46	46		0	0	0	0		0	0	0	0		0	0	0	0		4
5	46	46	46	46		0	0	0	0		0	0	0	0		46	46	46	46		0	0	0	0		5
6	0	0	0	0		0	0	0	0		0	0	0	0		92	92	92	92		0	0	0	0		6
ID	58	58	58	58		88	88	88	88		113	113	113	113		20	20	20	20		134	134	134	134		ID
[DEG]	21~84.7	32~84.7	49~84.7	63~84.7		20~84.7	32~84.7	49~84.7	63~84.7		20~84.7	32~84.7	49~84.7	63~84.7		28~84.7	37~84.7	51~84.7	63~84.7		52~84.7	51~84.7	56~84.7	62~84.7		[DEG]
	1	1	1	1		1	1	1	1		1	1	1	1		1	1	1	1		1	1	1	1		
	8.7t	8.7t	8.7t	8.7t		8.7t	8.7t	8.7t	8.7t		8.7t	8.7t	8.7t	8.7t		8.7t	8.7t	8.7t	8.7t		8.7t	8.7t	8.7t	8.7t		

FLJ	1.6m + 17.4m	6.2 t	8.0m x 6.2m	360 °	JPN

m	30.0	30.0	30.0	30.0	30.0	30.0	30.0	30.0	30.0	30.0	33.7	33.7	33.7	33.7	33.7	37.4	37.4	37.4	37.4	37.4	37.4	37.4	37.4	37.4	37.4	m
°	5	15	30	45	60	5	15	30	45	60	5	15	30	45	60	5	15	30	45	60	5	15	30	45	60	°
3.0																										3.0
3.5																										3.5
4.0																										4.0
4.5																										4.5
5.0																										5.0
6.0																										6.0
7.0																										7.0
8.0	2.3					3.2					3.1															8.0
9.0	2.3					3.2					3.1					2.4					2.5					9.0
10.0	2.3					3.2					3.1					2.4					2.5					10.0
11.0	2.3	2.3				3.2	3.2				3.1					2.4					2.5					11.0
12.0	2.3	2.3				3.2	3.2				3.1	3.1				2.4	2.4				2.5					12.0
14.0	2.3	2.3				3.2	2.9				3.1	3.0				2.4	2.4				2.5	2.5				14.0
16.0	2.3	2.3	2.2			3.2	2.8	2.3			3.1	2.8	2.3			2.4	2.4	2.2			2.5	2.5				16.0
18.0	2.3	2.3	2.1			3.1	2.6	2.2	1.9		3.1	2.6	2.2			2.4	2.4	2.2			2.5	2.5	2.1			18.0
20.0	2.3	2.3	2.0	1.8		2.9	2.4	2.1	1.8	1.5	2.9	2.5	2.1	1.8		2.4	2.4	2.1	1.8		2.5	2.4	2.0	1.8		20.0
22.0	2.3	2.2	1.9	1.7		2.7	2.3	2.0	1.7	1.5	2.7	2.3	2.0	1.8		2.4	2.4	2.0	1.8	1.5	2.5	2.2	1.9	1.7	1.5	22.0
24.0	2.3	2.1	1.8	1.7		2.1	2.2	1.9	1.7		2.0	2.2	1.9	1.7		2.0	2.2	1.9	1.7	1.5	2.5	2.1	1.8	1.7	1.5	24.0
26.0	2.3	2.0	1.8	1.6		1.5	1.9	1.8	1.6			1.9	1.8	1.6			1.9	1.8	1.7		2.4	2.1	1.8	1.6		26.0
28.0	2.2	1.9	1.7	1.6			1.3	1.8	1.6				1.8	1.6				1.8	1.6		2.2	2.0	1.7	1.6		28.0
30.0	2.1	1.8	1.6	1.5				1.3	1.5					1.5					1.6		2.0	1.9	1.7	1.5		30.0
32.0	1.9	1.8	1.6																		1.6	1.8	1.6	1.5		32.0
34.0	1.5	1.7	1.6																		1.2	1.4	1.6	1.5		34.0
36.0		1.4	1.5																		0.9	1.1	1.4			36.0
38.0		1.1																					1.0			38.0
40.0																										40.0
42.0																										42.0
44.0																										44.0
46.0																										46.0
48.0																										48.0
50.0																										50.0
52.0																										52.0
54.0																										54.0
56.0																										56.0
58.0																										58.0
60.0																										60.0
64.0																										64.0
1	0	0	0	0		92	92	92	92	92	92	92	92	92		92	92	92	92	92	0	0	0	0	0	1
2	0	0	0	0		92	92	92	92	92	92	92	92	92		92	92	92	92	92	0	0	0	0	0	2
3	0	0	0	0		46	46	46	46	46	92	92	92	92		92	92	92	92	92	46	46	46	46	46	3
4	46	46	46	46		0	0	0	0	0	0	0	0	0		46	46	46	46	46	92	92	92	92	92	4
5	92	92	92	92		0	0	0	0	0	0	0	0	0		0	0	0	0	0	92	92	92	92	92	5
6	92	92	92	92		0	0	0	0	0	0	0	0	0		0	0	0	0	0	92	92	92	92	92	6
ID	22	22	22	22		116	116	116	116	116	110	110	110	110		93	93	93	93	93	24	24	24	24	24	ID
[DEG]	47~84.7	42~84.7	49~84.7	63~84.7		59~84.7	59~84.7	60~84.7	62~84.7	77~84.7	64~84.7	65~84.7	66~84.7	65~84.7		66~84.7	67~84.7	68~84.7	68~84.7	77~84.7	52~84.7	54~84.7	54~84.7	63~84.7	78~84.7	[DEG]
	1	1	1	1		1	1	1	1	1	1	1	1	1		1	1	1	1	1	1	1	1	1	1	
	8.7t	8.7t	8.7t	8.7t		8.7t	8.7t	8.7t	8.7t	8.7t	8.7t	8.7t	8.7t	8.7t		8.7t	8.7t	8.7t	8.7t	8.7t	8.7t	8.7t	8.7t	8.7t	8.7t	

m	41.2	41.2	41.2	41.2	41.2	44.9	44.9	44.9	44.9	44.9	44.9	44.9	44.9	44.9	44.9	48.6	48.6	48.6	48.6	48.6	48.6	48.6	48.6	48.6	48.6	m
°	5	15	30	45	60	5	15	30	45	60	5	15	30	45	60	5	15	30	45	60	5	15	30	45	60	°
3.0																										3.0
3.5																										3.5
4.0																										4.0
4.5																										4.5
5.0																										5.0
6.0																										6.0
7.0																										7.0
8.0																										8.0
9.0																										9.0
10.0	2.7										2.4															10.0
11.0	2.7					1.9					2.4					2.0					2.2					11.0
12.0	2.7					1.9					2.4					2.0					2.2					12.0
14.0	2.7	2.7				1.9	1.9				2.4	2.4				2.0	2.0				2.2	2.2				14.0
16.0	2.7	2.7				1.9	1.9				2.4	2.4				2.0	2.0				2.2	2.2				16.0
18.0	2.7	2.6	2.1			1.9	1.9	1.9			2.4	2.4	2.1			2.0	2.0				2.2	2.2				18.0
20.0	2.7	2.5	2.1	1.8		1.9	1.9	1.9			2.4	2.4	2.0			2.0	2.0	2.0			2.2	2.2	2.0			20.0
22.0	2.7	2.4	2.0	1.8	1.5	1.9	1.9	1.9	1.7		2.4	2.4	2.0	1.7		2.0	2.0	1.9	1.7		2.2	2.2	1.9	1.7		22.0
24.0		2.3	1.9	1.7	1.5	1.9	1.9	1.8	1.7	1.5		2.2	1.9	1.7	1.5	2.0	2.0	1.9	1.7	1.5		2.2	1.9	1.7	1.5	24.0
26.0		1.9	1.8	1.7		1.9	1.9	1.8	1.6	1.5			1.8	1.7	1.5		2.0	1.8	1.6	1.5			1.8	1.6	1.5	26.0
28.0			1.8	1.6		1.9	1.9	1.7	1.6				1.8	1.6			1.8	1.7	1.6					1.6		28.0
30.0				1.6		1.5	1.9	1.7	1.5					1.6				1.7	1.6					1.6		30.0
32.0							1.4	1.6	1.5										1.5							32.0
34.0								1.4	1.5																	34.0
36.0									1.3																	36.0
38.0																										38.0
40.0																										40.0
42.0																										42.0
44.0																										44.0
46.0																										46.0
48.0																										48.0
50.0																										50.0
52.0																										52.0
54.0																										54.0
56.0																										56.0
58.0																										58.0
60.0																										60.0
64.0																										64.0
1	92	92	92	92	92	0	0	0	0	0	92	92	92	92	92	46	46	46	46	46	92	92	92	92	92	1
2	92	92	92	92	92	46	46	46	46	46	92	92	92	92	92	92	92	92	92	92	92	92	92	92	92	2
3	92	92	92	92	92	92	92	92	92	92	92	92	92	92	92	92	92	92	92	92	92	92	92	92	92	3
4	92	92	92	92	92	92	92	92	92	92	92	92	92	92	92	92	92	92	92	92	92	92	92	92	92	4
5	0	0	0	0	0	92	92	92	92	92	46	46	46	46	46	92	92	92	92	92	92	92	92	92	92	5
6	0	0	0	0	0	92	92	92	92	92	0	0	0	0	0	46	46	46	46	46	0	0	0	0	0	6
ID	83	83	83	83	83	26	26	26	26	26	65	65	65	65	65	38	38	38	38	38	49	49	49	49	49	ID
[DEG]	71~84.7	69~84.7	70~84.7	70~84.7	79~84.7	64~84.7	65~84.7	66~84.7	65~84.7	78~84.7	72~84.7	73~84.7	72~84.7	72~84.7	78~84.7	71~84.7	70~84.7	72~84.7	71~84.7	79~84.7	73~84.7	74~84.7	75~84.7	74~84.7	79~84.7	[DEG]
	1	1	1	1	1	1	1	1	1	1	1	1	1	1	1	1	1	1	1	1	1	1	1	1	1	
	8.7t	8.7t	8.7t	8.7t	8.7t	8.7t	8.7t	8.7t	8.7t	8.7t	8.7t	8.7t	8.7t	8.7t	8.7t	8.7t	8.7t	8.7t	8.7t	8.7t	8.7t	8.7t	8.7t	8.7t	8.7t	

フルオートラフィングジブ

FLJ	1.6m + 17.4m	6.2 t	8.0m x 6.2m	360 °	JPN

m	52.3	52.3	52.3	52.3	52.3	52.3	52.3	52.3	52.3	52.3	56.0	56.0	56.0	56.0	56.0	60.0	60.0	60.0	60.0	60.0	m
°	5	15	30	45	60	5	15	30	45	60	5	15	30	45	60	5	15	30	45	60	°
3.0																					3.0
3.5																					3.5
4.0																					4.0
4.5																					4.5
5.0																					5.0
6.0																					6.0
7.0																					7.0
8.0																					8.0
9.0																					9.0
10.0																					10.0
11.0																					11.0
12.0						2.0															12.0
14.0	1.8					2.0					1.8										14.0
16.0	1.8	1.8				2.0	2.0				1.8	1.8				1.0					16.0
18.0	1.8	1.8				2.0	2.0				1.8	1.8				1.0	1.0				18.0
20.0	1.8	1.8	1.8			2.0	2.0	2.0			1.8	1.8				1.0	1.0				20.0
22.0	1.8	1.8	1.8			2.0	2.0	1.9			1.8	1.8	1.8				1.0	1.0			22.0
24.0	1.8	1.8	1.8	1.6			2.0	1.9	1.7			1.8	1.8	1.6				1.0			24.0
26.0		1.8	1.8	1.6	1.5			1.8	1.6	1.5			1.8	1.6	1.5			1.0	1.0		26.0
28.0			1.7	1.6	1.4				1.6	1.4				1.6	1.4				1.0	1.0	28.0
30.0			1.7	1.5					1.5					1.5						1.0	30.0
32.0				1.5																	32.0
34.0																					34.0
36.0																					36.0
38.0																					38.0
40.0																					40.0
42.0																					42.0
44.0																					44.0
46.0																					46.0
48.0																					48.0
50.0																					50.0
52.0																					52.0
54.0																					54.0
56.0																					56.0
58.0																					58.0
60.0																					60.0
64.0																					64.0
1	46	46	46	46	46	92	92	92	92	92	92	92	92	92	92	100	100	100	100	100	1
2	92	92	92	92	92	92	92	92	92	92	92	92	92	92	92	100	100	100	100	100	2
3	92	92	92	92	92	92	92	92	92	92	92	92	92	92	92	100	100	100	100	100	3
4	92	92	92	92	92	92	92	92	92	92	92	92	92	92	92	100	100	100	100	100	4
5	92	92	92	92	92	92	92	92	92	92	92	92	92	92	92	100	100	100	100	100	5
6	92	92	92	92	92	46	46	46	46	46	92	92	92	92	92	100	100	100	100	100	6
ID	28	28	28	28	28	39	39	39	39	39	29	29	29	29	29	19	19	19	19	19	ID
[DEG]	73~84.7	73~84.7	73~84.7	73~84.7	78~84.7	74~84.7	75~84.7	76~84.7	75~84.7	78~84.7	75~84.7	76~84.7	78~84.7	76~84.7	79~84.7	77~84.7	78~84.7	78~84.7	79~84.7	78~84.7	[DEG]
	1	1	1	1	1	1	1	1	1	1	1	1	1	1	1	1	1	1	1	1	
	8.7t	8.7t	8.7t	8.7t	8.7t	8.7t	8.7t	8.7t	8.7t	8.7t	8.7t	8.7t	8.7t	8.7t	8.7t	8.7t	8.7t	8.7t	8.7t	8.7t	